FARMINGTON PUBLIC SCHOOLS - 2015 BOND

2018 RENOVATIONS

171712A: ELEMENTARY SCHOOL RENOVATIONS

BEECHVIEW AND KENBROOK ELEMENTARY SCHOOLS

ISSUED FOR: BIDS
DATE: 12-13-17
PROJECT NO.: 171712A

ARCHITECT:

WAKELY ASSOCIATES, INC./ ARCHITECTS
30500 VAN DYKE AVE, SUITE M-7, WARREN, MI 48093, 586.573.4100

MECHANICAL ENGINEER:

PETER BASSO ASSOCIATES, INC.
5145 LIVERNOIS, SUITE 100, TROY, MI 48098, 248.879.5666

ELECTRICAL ENGINEER:

PETER BASSO ASSOCIATES, INC.
5145 LIVERNOIS, SUITE 100, TROY, MI 48098, 248.879.5666

TECHNOLOGY ENGINEER:

PLANTE & MORAN
27400 NORTHWESTERN HWY, SOUTHFIELD, MI 48037, 248.603.5876

STRUCTURAL ENGINEER:

SNYDER STALEY ENGINEERS, PLC.
3085 BAY RD, SUITE 6, SAGINAW., MI 48603. 989.787.1710

CIVIL ENGINEER:

ANDERSON ECKSTEIN, AND WESTRICK INC
51301 SCHOENHEER RD., SHELBY CHARTER TWP, MI 48315. 586.726.1234

171712A - Farmington Public Schools. 2015 Bond
BEECHVIEW ELEMENTARY SCHOOL
& KENBROOK ELEMENTARY SCHOOL

Index of Drawings

GENERAL DRAWINGS:
G0.0 COVER SHEET, SHEET INDEX, LOCATION MAPS
G4.1 GENERAL INFORMATION, SYMBOLS, & ABBREVIATIONS
G4.2 FLOOR PLAN KEY NOTES, REFLECTED CEILING PLAN KEY NOTES, & WALL TYPES

LIFE SAFTY DRAWINGS:
LS1.0BV BEECHVIEW ELEMENTARY LIFE SAFETY PLAN
LS1.0KB KENBROOK ELEMENTARY LIFE SAFETY PLAN

CIVIL DRAWINGS:
C1.0B GENERAL PLAN
C2.0B REMOVE PLAN
C3.0B PAVING & GRADING PLAN
C3.1B PAVING & GRADING PLAN
C3.2B PAVING & GRADING PLAN
C4.0B STRIPING AND GEOMETRICS PLAN
C5.0B MISCELLANEOUS PROJECT DETAILS
C6.0B SOIL EROSION & SEDIMENTATION CONTROL PLAN
42B CITY OF FARMINGTON STANDARD WATER MAIN DETAILS
43B CITY OF FARMINGTON STANDARD WATER MAIN DETAILS

C1.0K GENERAL PLAN
C2.0K REMOVE PLAN
C3.0K CONSTRUCTION PLAN
C3.1 CONSTRUCTION PLAN
C3.2 PAVING & GRADING PLAN
C4.0 STRIPING AND GEOMETRICS PLAN
C5.0 MISCELLANEOUS PROJECT DETAILS
C6.0 S.E.S.C. PLAN
C6.1 S.E.S.C. DETAILS

STRUCTURAL DRAWINGS:
S1.0B BEECHVIEW STRURCTURAL DRAWINGS
S1.0K KENBROOK GENERAL NOTES
S2.0K KENBROOK STRUCTURAL PLANS
S3.0K KENBROOK STRUCTURAL DETAILS
S4.0K KENBROOK STRUCTURAL DETAILS
S5.0K KENBROOK STRUCTURAL PLANS

ARCHITECTURAL DRAWINGS:
AS1.0BV BEECHVIEW SITE PLAN
A1.0BV BEECHVIEW COMPOSITE FLOOR PLAN
AD1.1BV BEECHVIEW AREA "A" - DEMOLITION PLAN
AD1.2BV BEECHVIEW AREA "B" - DEMOLITION PLAN
A1.1BV BEECHVIEW AREA "A" - NEW WORK PLAN
A1.2BV BEECHVIEW AREA "B" - NEW WORK PLAN
A2.1BV BEECHVIEW AREA "A" - REFLECTED CEILING PLAN
A2.2BV BEECHVIEW AREA "B" - REFLECTED CEILING PLAN
A3.0BV BEECHVIEW ROOF PLAN
A3.1BV BEECHVIEW ROOF DETAILS
A4.0BV BEECHVIEW BUILDING ELEVATIONS
A5.1BV OFFICE ENLARGED PLANS AND DETAILS
A5.2BV DETAILS
A7.1BV BEECHVIEW DOOR SCHEDULE & DETAILS
A7.2BV BEECHVIEW ROOM FINISH SCHEDULE
A8.1BV DISPLAY BOARD PLAN
A8.2BV SIGNAGE SCHEDULE
A8.3BV FLOOR TILE PLAN

AS1.0KB KENBROOK SITE PLAN
A1.0KB KENBROOK COMPOSITE FLOOR PLAN
AD1.1KB KENBROOK AREA "A" - DEMOLITION PLAN
AD1.2KB KENBROOK AREA "B" - DEMOLITION PLAN
A1.1KB KENBROOK AREA "A" - NEW WORK PLAN
A1.2KB KENBROOK AREA "B" - NEW WORK PLAN
A2.1KB KENBROOK AREA "A" - REFLECTED CEILING PLAN
A2.2KB KENBROOK AREA "B" - REFLECTED CEILING PLAN
A3.0KB KENBROOK ROOF PLAN
A3.1KB KENBROOK ROOF DETAILS
A4.0KB KENBROOK BUILDING ELEVATIONS
A4.1KB KENBROOK BUILDING ELEVATIONS
A5.1KB INTERIOR ELEVATIONS AND MILLWORK DETAILS
A5.2KB NOT USED
A5.3KB OFFICE ENLARGED PLANS AND DETAILS
A5.4KB WALL SECTIONS AND DETAILS
A7.1KB KENBROOK DOOR SCHEDULE & DETAILS
A7.2KB KENBROOK ROOM FINISH SCHEDULE
A8.1KB KENBROOK DISPLAY BOARD PLAN
A8.2KB KENBROOK SIGNAGE SCHEDULE
A8.3KB FLOOR TILE PLAN

ELECTRICAL DRAWING LIST
E0.1BV ELECTRICAL STANDARDS AND DRAWING INDEX
E0.2BV ELECTRICAL STANDARD SCHEDULES
E0.3BV ELECTRICAL SITE PLAN
ED1.1BV ELECTRICAL DEOMLITION PLAN - AREA "A"
ED1.2BV ELECTRICAL DEMOLITION PLAN - "B"
E2.1BV LIGHTING PLAN - AREA "A"
E2.2BV LIGHTING PLAN - AREA "B"
E3.1BV POWER PLAN - AREA "A"
E3.2BV POWER PLAN - AREA "B"
E5.1BV ONE LINE DIAGRAMS
E5.2BV PANEL SCHEDULES
E7.1BV ELECTRICAL DETAILS AND DIAGRAMS
E7.2BV ELECTRICAL DETAILS AND DIAGRAMS\-
E0.1KB ELECTRICAL STANDARDS AND DRAWING INDEX
E0.2KB ELECTRICAL STANDARD SCHEDULES
E0.3KB ELECTRICAL SITE PLAN
ED1.1KB ELECTRICAL DEOMLITION PLAN - AREA "A"
ED1.2KB ELECTRICAL DEMOLITION PLAN - "B" AND "C"
E2.1KB LIGHTING PLAN - AREA "A"
E2.2KB LIGHTING PLAN - AREA "B" AND "C"
E3.1KB POWER PLAN - AREA "A"
E3.2KB POWER PLAN - AREA "B" AND "C"
E5.1KB ONE LINE DIAGRAMS
E5.2KB PANEL SCHEDULES
E7.1KB ELECTRICAL DETAILS AND DIAGRAMS
E7.2KB ELECTRICAL DETAILS AND DIAGRAMS

MECHANICAL DRAWING LIST
M1.0BV MECHANICAL STANDARDS AND DRAWING INDEX
MD1.1BV MECHANICAL DEMOLITION PLAN - AREA 'A'
MD1.2BV MECHANICAL DEMOLITION PLAN - AREA "B"
M2.1BV PLUMBING NEW WORK PLAN - AREA "A"
M2.2BV PLUMBING NEW WORK PLAN - AREA "B"
M3.1BV HVAC PIPING NEW WORK PLAN - AREA "A"
M3.2BV HVAC PIPING NEW WORK PLAN - "B" AND "C"
M4.1BV STEEL METAL NEW WORK PLAN - AREA "A"
M4.2BV SHEET METAL NEW WORK PLAN - AREA "B" AND "C"
M6.1BV MECHANICAL DETAILS
M6.2BV MECHANICAL DETAILS
M7.1BV MECHANICAL SCHEDULES
M7.2BV MECHANICAL SCHEDULES
M7.3BV MECHANICAL SCHEDULES
M8.1KBV TEMPERATURE CONTROL STANDARDS AND GERNAL NOTES
M8.2BV TEMPERATURE CONTROLS
M8.3BV TEMPERATURE CONTROLS
M8.4BV TEMPERATURE CONTROLS
M1.0KB MECHANICAL STANDARDS AND DRAWING INDEX
MD1.1KB MECHANICAL DEMOLITION PLAN - AREA 'A'
MD1.2KB MECHANICAL DEMOLITION PLAN - AREA "B" AND "C"
M2.1KB PLUMBING NEW WORK PLAN - AREA "A"
M2.2KB PLUMBING NEW WORK PLAN - AREA "B" AND "C"
M3.1KB HVAC PIPING NEW WORK PLAN - AREA "A"
M3.2KB HVAC PIPING NEW WORK PLAN - "B" AND "C"
M4.1KB STEEL METAL NEW WORK PLAN - AREA "A"
M4.2KB SHEET METAL NEW WORK PLAN - AREA "B" AND "C"
M6.1KB MECHANICAL DETAILS
M6.2KB MECHANICAL DETAILS
M7.1KB MECHANICAL SCHEDULES
M7.2 KB MECHANICAL SCHEDULES
M7.3KB MECHANICAL SCHEDULES
M8.1KB TEMPERATURE CONTROL STANDARDS AND GERNAL NOTES
M8.2KB TEMPERATURE CONTROLS
M8.3KB TEMPERATURE CONTROLS
M8.4KB TEMPERATURE CONTROLS

Building Addresses

1 BEECHVIEW ELEMENTARY SCHOOL
26850 WESTMEATH CT
FARMINGTON HILLS, 48334

2 KENBROOK ELEMENTARY SCHOOL
32130 BONNET HILL RD.
FARMINGTON HILLS, 48334

Location Map NOT TO SCALE

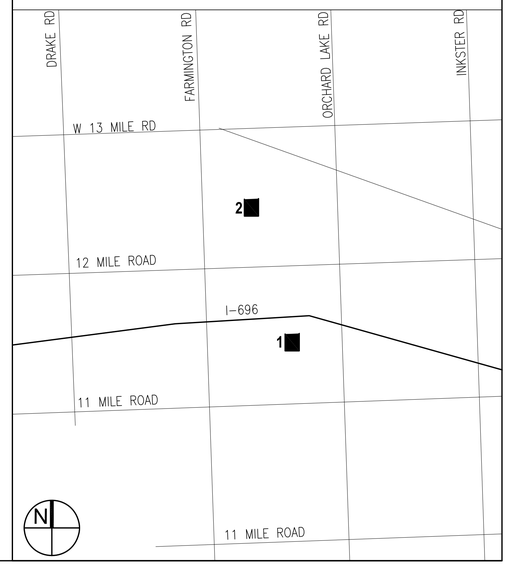

Farmington Public Schools - 2015 BOND - 2018 RENOVATIONS
171712B: BEECHVIEW & KENBROOK ELEMENTARY SCHOOLS
Issued for: BIDS Date - 12/13/17

ARCHITECTURAL ABBREVIATION LIST

ABBREVIATION	DESCRIPTION
A/C & VENT	AIR CONDITIONING & VENTILATION
A/E	ARCHITECT-ENGINEER
AB	ARCHITECT BOLT
ABRSV	ABRASIVE
ABRSV THRESH	ABRASIVE THRESHOLD
ACI	AMERICAN CONCRETE INSTITUTE
ACOUS INSUL	ACOUSTICAL INSULATION
ACOUS PNL	ACOUSTICAL PANEL
ACS DR	ACCESS DOOR
ACS PNL	ACCESS PANEL
ACST	ACOUSTIC
ACST SLNT	ACOUSTICAL SEALANT
ADA	AMERICANS W/ DISABILITIES ACT
ADDL	ADDITIONAL
ADDM	ADDENDUM
ADDN	ADDITION
ADJ	ADJACENT
ADJS	ADJUSTABLE
AFF	ABOVE FINISHED FLOOR
AGGR	AGGREGATE
AHU	AIR HANDLING UNIT
ALT	ALTERATIONS
ALUM	ALUMINUM
ANES	ANESTHESIA, ANESTESIOLOGY
ANOD	ANODIZED
ANSI	AMERICAN NATIONAL STANDARDS INSTITUTE
APC	ACOUSTICAL PANAL CEILING
APPROX	APPROXIMATE
ARCH	ARCHITECTURAL
ASPH	ASPHALT
ASTM	AMERICAN SOCIETY FOR TESTING MATERIALS
ATC	ACOUSTICAL TILE CEILING
AUTO	AUTOMATIC
AVG	AVERAGE
B PL	BASE PLATE
B/B	BACK TO BACK
BC	BOTTOM CHORD
BD	BOARD
BEV	BEVELED
BF	BARRIER FREE
BF	BOTH FACES
BITUM	BITUMINOUS
BL	BUILDING LINE
BLDG	BUILDING
BLDG DAT	BUILDING DATUM
BLKG	BLOCKING
BLW	BELOW
BM	BEAM
BOS	BOTTOM OF STEEL
BOT	BOTTOM
BR	BEDROOM
BRKT	BRACKET
BRZ	BRONZE
BS	BOTH SIDES
BSMT	BASEMENT
BT	BENT
BTWN	BETWEEN
BULLN	BULLETIN
BUR	BUILT-UP ROOFING
C	CHANNEL
C TO C	CENTER TO CENTER
CA	COMPRESSED AIR
CAB	CABINET
CANTL	CANTILEVER
CATH	CATHETERIZE CATHETER
CB	CATCH BASIN
CEM	CEMENT
CER	CERAMIC
CF/CI	CONTRACTOR FURNISHED/ CONTRACTOR INSTALLED
CF/OI	CONTRACTOR FURNISHED/ OWNER INSALLED
CFMF	COLD-FORMED METAL FRAMING
CG	CORNER GUARD
CH	CORNER HOOK
CH BD	CHALK BOARD
CHKD	CHECKERED
CI	CAST IRON
CR	CIRCLE CIRCULAR CIRCULATION
CJ	CONTROL JOINT
CL	CENTERLINE
CLG	CEILING
CLIN	CLINICAL
CLO	CLOSET
CLR	CLEAR
CMU	CONCRETE MASONARY UNIT
CNVR	CONVEYOR
CO	CLEANOUT
CO2	CARBON DIOXIDE
COL	COLUMN
COMO	COMPOSITION
CONC	CONCRETE
CONF	CONFERENCE
CONN	CONNECTION
CONSTR	CONSTRUCTION
CONSTR JT	CONSTRUCTION JOINT
CONT	CONTINUATION, CONTINUE, CONTINOUS
CONTR	CONTRACTOR
CORR	CORRIDOR
CPRS	COMPRESSIBLE, COMPRESSED
CPS	CARPET (SHEET)
CPI	CARPET (TILE)
CPW	CARPET (WALL BASE)
CR	CARD READER
CR	CHAIR RAIL
CRCMF	CIRCUMFERENCE
CRIT	CRITICAL
CRS	COURSE
CSK	COUNTER SINK
CSS	CLINIC SERVICE SINK
CT	CERAMIC TILE
CT	COMPUTED TOMOGRAHY
CTB	CERAMIC TILE BASE
CTR	CENTER CENTRAL
CTRD	CENTERED
CTRL	CONTROL
CU	CUBIC
CW	COLD WATER

ABBREVIATION	DESCRIPTION
dB	DECIBEL
DBL ACT DR	DOUBLE ACTING DOOR
DECON	DECONTAMINATION
DEG	DEGREE
DEMO	DEMONOLISH DEMOLITION
DEPT	DEPARTMENT
DET	DETAIL
DF	DRINKING FOUNTAIN
DIA	DIAMETER
DIAG	DIAGONAL
DIAPH	DIAPHRAGM
DIFF	DIFFUSER
DIM	DIMENSION
DIST	DISTANCE
DW	DISTILLED WATER
DL	DEAD LOAD
DMF	DAMPROOFING
DN	DOWN
DO	DOOR OPENING OR DATA OUTLET
DR	DOOR
DRP	DECAY RETARDANT PLYWOOD
DRW	DECAY RETARDANT WOOD
DS	DOWNSPOUT
DT	DRAIN TILE
DW	DISTILED WATER
DWG	DRAWING
DWL	DOWEL
E	EAST
EA	EACH
EF	EACH FACE
EIFS	EXTERIOR INSULATION & FINISH SYSTEM
EJ	EXPANDING JOINT
EKG	ELECTRO-CARDIOGRAM
EL	ELEVATION
ELEC	ELECTRICAL OR ELECTRONIC
ELEV	ELEVATOR
EMBED	EMBEDMENT
EMER	EMERGENCY
EMER SHR	EMERGENCY SHOWER
EMER SHR/EWS	EMERGENCY SHOWER/EYE WASH
ENCL	ENCLOSURE
ENTR	ENTRANCE
EQ	EQUAL
EQUIP	EQUIPMENT
ER	EMERGENCY ROOM
ETR	EXISITING TO REMAIN
EW	EACH WAY
EWC	ELECTRIC WATER COOLER
EWH	ELECTRIC WATER HEATER
EWS	EYE WASH STATION
EX	EXISTING
EXC	EXCAVATE
EXH	EXHAUST
EXIST	EXISTING
EXTR	EXTRUDED
F/F	FACE TO FACE
FD	FLOOR DRAIN
FE	FIRE EXTINGUSHER
FEC	FIRE EXTINGUSHER CABINET
FH	FLAT HEAD
FHR	FIRE HOSE RACK/ REEL
FIN	FINISH OR FINISHED
FIP	FOAMED-IN-PLACE
FIXT	FIXTURE
FJ	FALSE JOINT
FLASH	FLASHING
FLG	FLANGE
FLR	FLOOR
FM	FACTORY MUTUAL
FNDN	FOUNDATION
FOC	FACE OF COLUMN
FR	FIRE RATED
FRP	FIRE RATED PLYWOOD
FRPFG	FIREPROOFING
FRW	FIRE RATED WOOD
FT	FOOT OR FEET
FTG	FOOTING
FURN	FURNITURE
g	GRAM
GA	GAUGE
GALV	GALVANIZED
GCW	GLAZED CURTAINWALL
GDR	GUARDRAIL
GEN	GENERAL
GFCI	GROUND FAULT CIRCUIT INTERRUPTER
GFRP	GLASS-FIBER REINFORCED PLSTIC
GHT	GLAZED HOLLOW TILE
GI	GALVANIZED IRON
GL	GLASS, GLAZING
GR	GRADE
GR BM	GRADE BEAM
GRAD	GRADIENT
GRL	GRILLE
GRTG	GRATING
GYO	GYPSUM
H	HIGH
HB	HOSE BIBB
HD	HEAVY DUTY
HDW	HARDWARE
HEX	HEXAGON
HM	HOLLOW METAL
HNDRL	HANDRAIL
HORIZ	HORIZONTAL
HOSP	HOSPITAL
HPT	HIGH POINT
HR	HOUR
HSKPG	HOUSE KEEPING
HSS	HOLLOW STRUCTURAL SECTIONS
HT	HEIGHT
HTG	HEATING
HVAC	HEATING VENTAILATION AIR CONDITIONING
HW	HOT WATER
HWY	HIGHWAY
HYD	HYDRANT

ABBREVIATION	DESCRIPTION
JC	JANITORS CLOSET
JT	JOINT
L	ANGLE
L	LENGTH
LAB	LABORATORY
LAM	LAMINATED
LAV	LAVATORY
LBS	LABORATORY
LG	LONG
LH	LEFT HAND
LHR	LEFT HAND REVERSE
LN	LINEAR
LKR	LOCKER ROOM
LLH	LONG LEG HORIZONTAL
LLV	LONG LEG VERTICAL
LO	LOUVER OPENING
LPT	LOW POINTLTLIGHT
LT WT	LIGHTWEIGHT
LTG	LIGHTING
LVR	LOUVER
MACH	MACHINE
MAG	MAGNET OR MAGNETIC
MAR	MARBLE
MAS	MASONARY
MATL	MATERIAL
MAX	MAXIMUM
MB	MARKER BOARD
MBC	MICHIGAN BUILDING CODE
MC	MICELLANEOUS CHANNEL
MCA	MEDICAL COMRESSED AIR
MCL	METAL CEILING (LINER)
MCP	METAL CEILING (PAN)
MECH	MECHCANICAL
MED	MEDICAL
MEMB	MEMBRANE
MEMB RFG	MEMBRANE ROOFING
MEZZ	MEZZANINE
MFG	MANUFACTURING
MH	MANHOLE
MIN	MINIMUM
MISC	MISCELLANEOUS
MO	MASONRY OPENING
MOD BIT	MODIFIED BITUMEN
MR	MOISTURE RESISTANT
MRI	MAGNETIC RESONANCE IMAGING
MRT	MARBLE THRESHOLD
MTC	METAL TOILET COMPARTMENT
MTD	MOUNTED
MTL	METALIC OR METAL
MTL FAB	METAL FABRICATIONS
MULL	MULLION
N	NORTH
N2	NITROGEN
N20	NITROUS OXIDE
NARC	NARCOTICS
NATL	NATIONAL
NC	NOISE CRITERIA
NE	NORTH EAST
NFPA	NATIONAL FIRE PROTECTIONA ASSOCIATION
NIC	NOT IN CONTACT
NL	NIGHT LIGHT
NO	NUMBER OR NUMBERS
NOM	NOMINAL
NOUR	NOURISHMENT
NS	NURSE STATION
NSF	NATIONAL SANITATION FOUNDATION
NW	NORTHWEST
O2	OXYGEN
O/O	OUT TO OUT
OBS	OBSERVATION
OBSC GL	OBSCURE GLASS
OBW	OBSERVATION WINDOW
OC	ON CENTER
OD	OUTSIDE DIAMETER
OF	OUTSIDE FACE
OF/CI	OWNER FURNISHED/ CONTRACTOR INSTALLED
OF/OI	OWNER FURNISHED/ OWNER INSTALLED
OFF	OFFICE
OFRC	OVERFLOW ROOF CONDUCTOR
OFRS	COVERFLOW ROOF SUMP
OH DR	OVERHEAD DOOR
OPH	OPPOSITE HAND
OPNG	OPENING
OPP	OPPOSITE
ORIG	ORIGINAL
ORN	ORNAMENTAL
OSHA	OCCUPATIONAL SAFETY & HEALTH ADMINISTRATION
Oz	OUNCE
PACU	POST ANESTHESIA UNIT
PB	PUSH BUTTON
PC	PIECE OR PIECES
PEND	PENDENT
PERF	PERFORATED
PERM	PERMANENT
PI	POINT OF INTERSECTION
PL	PROPERTY LINE
PL GL	PLATE GLASS
PLAM	PLASTIC LAMINATE
PLAS	PLASTER
PLBG	PLUMMING
PLT	PLATE OR PLATED
PLTC	PLASTIC LAMINATE TOILET COMPARTIMENT
PLYD	PLYWOOD
PMF	PERMANENT METAL FORM
PNEU	PNEUMATIC
PNL	PANEL
PORC	PORCELAIN
PORT	PORTABLE
POS	POSITION
PP	PANEL POINT
PR	PAIR
PREFAB	PREFABRICATED
PREP	PREPARATION
PROC	PROCESS OR PROCESSING

ABBREVIATION	DESCRIPTION
QT	QUARRY TILE
R	RADIUS
R	RISER
RB	RESILENT BASE
RC	ROOF CONDUCTOR
RCPTR	RECEPTOR
RCVG	RECEIVING
REC	RECESS OR RECESSED
REF	REFERENCE
REF	REFRIGERATOR
REG	REGISTER
REINF	REINFORCE OR REINFORCED
REV	REVISION
RF	RADIOGRAPHY & FLOUROSCOPY
RFG	ROOFING
RFO	ROOF OPENING
RH	RIGHT HAND
RHB	ROOF HOSE BOX
RHR	RIGHT HAND REVERSE
RM	ROOM
RND	ROUND
RO	ROUGH OPENING
RR	RAILROAD
RS	ROOF SUMP
RSF	RESILIENT SHEET FLOORING
RTF	RESILIENT TILE FLOORING
RTNG	RETAINING
RTU	ROOF TOP UNIT
RV	ROOF VENTILATOR
RVS	REVERSE
S	SOUTH
S	S-SHAPE STEEL MEMBER
SAB	SOUND ATTENUATION BLANKET
SAF	SPRAY APPLIED FIREPROOFING
SB	SOIL BORING
SCHED	SCHEDULE
SDG	SIDING
SE	SOUTHEAST
SECT	SECTION
SECY	SECRETARY
SH	SHOWER
SHT	SHEET
SI	STEEL & IRON WORK
SIM	SIMILAR
SLDG	SLIDING
SLDG WDW	SLIDING WINDOW
SLNT	SEALANT
SLV	SHORT LEG VERTICAL
SM	SHEET METAL
SP	SHAFT PARTITION
SPEC	SPECIFICATION
SPKLR	SPRINKLER
SQ	SQUARE
SSK	SERVICE SINK
SST	STAINLESS STEEL
STA	STATION
STAG	STAGGERED
STC	SOUND TRANSMISSION CLASS
STD	STANDARD
STIF	STIFFENER
STL	STEEL
STOR	STORAGE
STRUCT	STRUCTURAL
STRUCT STL	STRUCTURAL STEEL
SURF	SURFACE
SUSP	SUSPENDED OR SUSPENSION
SV	SHEET VINYL
SW	SOUTH WEST
SW	SWITCH
SWD-FR	SHEATHING WOOD-FIRE RETARDANT
SYM	SYMMETRICAL
T	TREAD
T & G	TOUNGUE & GROOVE
T & R	TREAD & RISER
TA	TOILET ACCESSORIES
TB	TACK BOARD
TBD	TO BE DETERMINED
TEL	TELEPHONE
TEMP	TEMPERATURE
TERR	TERRAZZO
THD	THREAD
THK	THICK OR THICKNESS
THRESH	THRESHOLD
TK BD	TACKBOARD
TOC	TOP OF CONCRETE (ELEVATION)
TOIL	TOILET
TOIL RM	TOILET ROOM
TOR	TOP OF RAIL (ELEVATION)
TOS	TOP OF STEEL (ELEVATION)
TOW	TOP OF WALL (ELEVATION)
TRAN	TRANSOM
TV	TELEVISION
TYP	TYPICAL
UC	UNDERCABINET
UG	UNDERGROUND
UM	UNIT HEATER
UL	UNDERWRITERS LABORATORIES
UN	UNLESS NOTED
UNO	UNLESS NOTED OTHERWISE
UR	URINAL
U/S	UNDERSIDE
VAC	VACUUM
VENT	VENTILATION OR VENTILATING
VERT	VERTICAL
VEST	VESTIBULE
VIF	VERIFY IN FIELD
VIT	VITREOUS
VOL	VOLUME
VWC	VINYL WALL COVERING
W	WEST
W	WIDE FLANGE SHAPES
W	WIDE OR WIDTH

TYPICAL NOTES

TYPICAL CONSTRUCTION NOTES:

1. ALL WORK SHALL COMPLY WITH ALL APPLICABLE NATIONAL, STATE AND LOCAL CODES, ORDINANCES AND REGULATIONS.
2. ALL MATERIALS SHALL BE INSTALLED/APPLIED IN STRICT ACCORDANCE WITH MANUFACTURER'S REGULATIONS.
3. CONTRACTOR SHALL BE HELD RESPONSIBLE FOR VISITING THE JOB SITE AND FAMILIARIZING THEMSELVES WITH EXISTING CONDITIONS PRIOR TO START OF WORK. ALL DIMENSIONS AND FIELD CONDITIONS SHALL BE VERIFIED, AND ARCHITECT NOTIFIED OF ANY DISCREPANCIES PRIOR TO THE RECEIPT OF BIDS. FAILURE OF THE CONTRACTOR TO VERIFY ALL CONDITIONS PRIOR TO THE AWARD OF BID WILL NOT BE CONSIDERED AS GROUNDS FOR AN EXTRA.
4. ALL EXISTING DIMENSIONS ARE TO BE VERIFIED IN THE FIELD BY CONTRACTOR PRIOR TO THE FABRICATION OR PURCHASE OF MATERIALS.
5. THE CONTRACTOR SHALL BE HELD RESPONSIBLE FOR INITIATING, MAINTAINING AND SUPERVISING ALL SAFETY PRECAUTIONS AND PROGRAMS IN CONNECTION WITH THE PERFORMANCE OF THE CONTRACT. PROVIDE ALL NECESSARY TEMPORARY PROTECTION, SHORING, BRACING, ETC. AS REQUIRED TO ENSURE THE SAFETY OF THE GENERAL PUBLIC DURING CONSTRUCTION.
6. ALL ITEMS SHALL BE AS SPECIFIED BY ARCHITECT. SUBMIT SUBSTITUTION REQUESTS DURING BIDDING FOR REVIEW.
7. SUBMIT SHOP DRAWINGS, PRODUCT DATA, AND SAMPLES TO THE ARCHITECT FOR REVIEW PRIOR TO INSTALLATION/APPLICATION.
8. ALL DEBRIS SHALL BE LEGALLY DISPOSED OF OFF THE SITE BY THE CONTRACTOR.
9. ALL PRECAUTIONS SHALL BE TAKEN TO AVOID DAMAGE TO EXISTING MATERIALS AND CONSTRUCTION TO REMAIN.
10. CONTRACTOR SHALL CUT AND PATCH EXISTING WALLS, FLOORS, CEILINGS, ETC., AS REQUIRED TO COMPLETE THE WORK WITHOUT EXTRA COST TO OWNER.
11. CONTRACTOR SHALL KEEP NOISE, DUST, ETC., TO A MINIMUM STANDARD AS SET FORTH BY THE OWNER.
12. CONTRACTOR SHALL COORDINATE INSTALLATION AND PHASING OF WORK WITH THE CONSTRUCTION MANAGER, ARCHITECT AND OWNER'S REPRESENTATIVE PRIOR TO THE START OF WORK.

ARCHITECTURAL SYMBOLS

SYMBOL	DESCRIPTION	SYMBOL	DESCRIPTION
N	PROJECT NORTH - TRUE NORTH AS INDICATED ONLY ON SITE PLAN		EXISTING DOOR TO REMAIN
			EXISTING DOOR TO BE REMOVED
OFFICE 101	ROOM NAME & NUMBER		NEW DOOR
	DOOR SCHEDULE TAG		EXISTING WALL TO BE REMOVED
B 5 6 A A2.1	INTERIOR ELEVATION SYMBOL		
10 A4.3	EXTERIOR ELEVATION SYMBOL		
11 A4.1	WALL SECTION / DETAIL		
3 A1.6	DETAIL OR PLAN ENLARGEMENT		

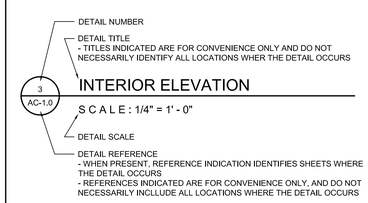

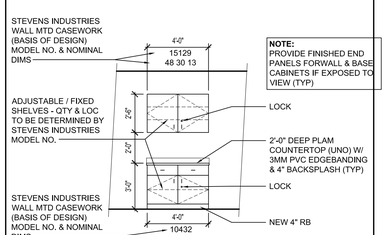

3
A-1.0
INTERIOR ELEVATION
TYPICAL NOTES
SCALE: 1/4" = 1' - 0"

WAKELY ASSOCIATES, INC.
ARCHITECTS

30500 VAN DYKE AVENUE
SUITE M-7
WARREN, MICHIGAN 48093
PH: 586.573.4100
FX: 586.573.0822
www.WakelyAIA.com

FARMINGTON PUBLIC SCHOOLS - 2015 BOND
2018 PROJECTS
KENBROOK & BEECHVIEW ELEMENTARY SCHOOLS

GENERAL INFORMATION
SYMBOLS
ABBREVIATIONS

PRELIMINARY ☐
DESIGN DEVELOPMENT ☐
CONSTRUCTION ☐
FINAL RECORD ■

DRAWN BY NJL
CHECKED BY BJS

REVISIONS

DATE: December 6, 2017

SHEET NO.
G4.1

JOB NO. 171712A

REFLECTED CEILING PLAN KEY NOTES:

PLEASE NOTE:
NOT ALL FLOOR PLAN KEYNOTES APPLY TO EACH BUILDING.

1. REMOVE AND REINSTALL AND MODIFY EXISTING LAY-IN CEILING SYSTEM AS REQ'D FOR ALL NEW CONSTRUCTION AND OVERHEAD WORK. ADD NEW TILES/GRID ETC. TO CONTINUE EXISTING PATTERN AS REQ'D (VIF)
2. NOT USED
3. PROVIDE NEW 2X4 ACOUSTIC CEILING AND T GRID SEE FINISH SCHEDULE FOR HT.
4. REMOVE/REPLACE EXISTING LAY-IN CEILING TILES. INSTALL NEW LAY-IN TILES. EXISTING GRID TO REMAIN.
5. PROVIDE NEW GYPSUM BOARD CEILING ON METAL FRAMING. SEE FINISH SCHEDULE FOR HT.

NOTES:
1. NOT ALL WALL TYPES ARE USED ON EACH FLOOR.
2. EXTEND WALLS UP FULL HEIGHT TO DECK ABOVE (U.N.O.)
3. DO NOT FASTEN VERTICAL STUDS TO TOP RUNNER TRACK @ SECOND FLOOR ASSEMBLIES. USE SLIP TRACK TO ALLOW FOR DEFLECTION OF STRUCTURE WITHOUT COMPROMISING WALL INTEGRITY.

WALL TYPES:

A. NOMINAL 5", ACTUAL 4 7/8":
5/8" HI- IMPACT GYP BD BOTH SIDES OF 3 5/8" 20 GA METAL STUDS AT 1'-4" O.C. MAX W/ SOUND ATTEN BLANKETS IN ALL VOIDS FULL HEIGHT

B. NOMINAL 8", ACTUAL 7 3/4":
4" BRICK ON 4" CMU FULL HEIGHT TO DECK ABOVE.

C. NOMINAL 8", ACTUAL 7 5/8":
8" CMU

D. NOMINAL 12", ACTUAL 11 5/8":
12" CMU

E. NOMINAL 8", ACTUAL 7 5/8":
8" CMU W/ ACOUSTIC FOAM FILL IN ALL CORES FULL HT. USE ACOUSTICAL SEALANT AT ADJACENT WALLS, AND AT ROOF DECK. FILL DECK FLUTES W/ SOUND ATTEN BLANKETS SPRAYED IN PLACE.

F. NOMINAL 2"
5/8" HI-IMPACT GYP. BD. ON 1 5/8" METAL FURRING AT 1'-4" O.C.

G. NOMINAL 7",
5/8" HI -IMPACT GYP BOARD ON 3/4" METAL FURRING ON 6"CMU

H. NOMINAL 6",
6" CMU

J. NOMINAL 7", ACTUAL 7 7/8"
5/8" HI-IMPACT GYP BOARD ON METAL, ON 6" METAL STUDS AT 1'-4" O.C. MAX W/ SOUND BLANKETS INSTALLED IN VOIDS FULL HEIGHT

K. NOMINAL 4",
4" CMU

L. NOMINAL 7", ACTUAL 7 7/8"
5/8" HI-IMPACT GYP BOARD ON METAL, ON 6" METAL STUDS AT 1'-4" O.C. MAX W/ SOUND BLANKETS INSTALLED IN VOIDS FULL HEIGHT; 48" HIGH WITH 2" STAINED SOLID OAK TOP AND OAK TRIM ON ALL SIDES.

M. NOMINAL 10", ACTUAL 9 5/8"
10" CMU

FIRE RATED WALL TYPES:

NOTE:
EXTEND WALLS UP FULL HEIGHT TO DECK ABOVE. FILL ALL VOIDS AT DECK FLUTES WITH FIRE SAFING MATERIAL AND APPROVED FIRE SPRAY SEALANTSON BOTH SIDES AS SPECIFIED.

A1. **1 HOUR RATING (UL-U438)**
NOMINAL 5", ACTUAL 4 7/8":
5/8" TYPE 'X' FIRE RATED GYP BD BOTH SIDES OF 3 5/8" 20 GA METAL STUDS AT 1'-4" OC MAX W/ SOUND ATTEN BLANKETS IN ALL VOIDS FULL HEIGHT.

B1. **1 HOUR RATING**
NOMINAL 7", ACTUAL 7 1/4":
5/8" TYPE 'X' FIRE RATED GYP BD BOTH SIDES OF 6", 20 GA METAL STUDS AT 1'-4" OC MAX W/ SOUND ATTEN BLANKETS IN ALL VOIDS FULL HEIGHT.

C1. **1 HOUR RATING (UL-xxx)**
NOMINAL 8", ACTUAL 7 5/8":
NEW 8" CMU TO DECK ABOVE

D2. **2 HOUR RATING - FIRE WALL (UL-xxx)**
NOMINAL 12", ACTUAL 11 5/8":
NEW 12" CMU TO DECK ABOVE

E1. **1 HOUR RATING - FIRE WALL (UL-xxx)**
NOMINAL 12"
4"BRICK ON 8" CMU UP TO DECK ABOVE

F2. **2 HOUR RATING - FIRE WALL (UL-xxx)**
NOMINAL 8" CMU, ACTUAL 7 5/8":
NEW 8" CMU TO DECK ABOVE.

G2. **2 HOUR RATING - FIRE WALL (UL-xxx)**
NOMINAL 10" CMU, ACTUAL 9 5/8":
NEW 10" CMU TO DECK ABOVE.

H1. **1 HOUR RATING - FIRE WALL (UL-xxx)**
NOMINAL 6" CMU, ACTUAL 5 5/8":
NEW 6" CMU TO HEIGHT AS NOTED ON DRAWINGS.

NEW WORK PLAN KEYNOTES: (CONTINUED)

PLEASE NOTE:
NOT ALL FLOOR PLAN KEYNOTES APPLY TO EACH BUILDING.

48. PROVIDE NEW CMU (MATCH WIDTH OF EXISTING) ON TOP OF EXIST. SCREENWALL UP TO 4" ABOVE FIN. CLG HT. MIN. (V.I.F.)
49. PROVIDE NEW RUBBER FLOORING ON INCLINE OF RAMP SURFACE PER SPEC.
50. LOCATION OF AIPHONE UNIT AND ADA PUSH BUTTON AND CARD ACCESS PAD
51. NEW MASONRY/METAL PANEL COLUMN.
52. NEW 4" CONCRETE SLAB ON 4"COMPACTED FILL MIN.
53. FILL VOID WITH TOP SOIL & SEED AND SLOPE TO DRAIN AWAY FROM WALL.
54. TOOTH IN SOLID BULLNOSED CMU AT JAMBS TO MATCH COURSING
55. 36" HORIZONTAL GRAB BAR
56. 42" HORIZONTAL GRAB BAR
57. 18" VERTICAL GRAB BAR
58. TOOTH IN NEW CMU AT REMOVE WALL TO MATCH COURSING AND THICKNESS. (V.I.F.)
59. PROVIDE AND INSTALL NEW P.LAM TOP TO MATCH SIZE AND SHAPE OF EXISTING. INSTALL NEW SINK (SEE MECH)
60. PROVIDE NEW DROP DOWN PROJECTION SCREEN AND CEILING MOUNTED PROJECTOR.
61. INFILL MASONRY OPENING LEFT BY REMOVED MECHANICAL UNIT. PROVIDE FOR 15 SF OF MASONRY TO MATCH ADJACENT WALL CONSTRUCTION. TOOTH-IN TO MATCH WIDTH AND COURSING. SEE MECHANICAL.
62. REMOVE AND INSTALL EXISTING HANDRAIL AS REQUIRED TO COMPLETE NEW WORK.
63. INFILL MASONRY OPENING LEFT BY REMOVED MECHANICAL UNIT. PROVIDE FOR 8 SF OF MASONRY TO MATCH ADJACENT WALL CONSTRUCTION. TOOTH-IN TO MATCH WIDTH AND COURSING. SEE MECHANICAL.

ELEMENTARY SCHOOL - NEW WORK PLAN KEYNOTES:

PLEASE NOTE:
NOT ALL FLOOR PLAN KEYNOTES APPLY TO EACH BUILDING.

1. INSTALL NEW DOOR AND HARDWARE PER SCHEDULE
2. INSTALL NEW ALUMINUM FRAME PER DOOR SCHEDULE
3. INSTALL NEW H.M. FRAME PER DOOR SCHEDULE
4. AT NEW DOOR OR WINDOW OPENING PROVIDE MASONRY PRECAST LINTEL ABOVE DOOR BEARING 8" MIN ON 3 COURSES GROUTED SOLID EACH SIDE. (TOOTH IN NEW CMU TO MATCH EXISTING MASONRY COURSING @ JAMBS FULL HEIGHT.) PROVIDE GALV. STEEL ANGLE LINTEL TO CARRY BRICK VENEER IF APPLICABLE - SIZE TBD IN FIELD. PROVIDE FLASHING AND WEEPS AT EXTERIOR WALLS.
5. CONSTRUCT NEW MASONRY CHILLER SCREEN WALL. MATCH HEIGHT, WIDTH AND COURSING TO ADJACENT EXISTING WALL . SEE DETAIL X/AX.XBV
6. PAINT ALL WALLS IN ROOM FULL HEIGHT. SEE FINISH SCHEDULE FOR MORE INFO.
7. PATCH WALLS FLUSH & PREP FOR PAINT. PROVIDE NEW METAL LOCKERS ON NEW 4" WOOD BASE.
8. PAINT EXISTING 3'-6"x3'-0" (VIF) WOOD WALL CABINET TO MATCH REST OF ROOM. PROVIDE ALTERNATE ___TO REPLACE WITH LAMINATE PER DETAIL ____
9. INSTALL NEW PCT WALL TILE WAINSCOT IN ENTIRE ROOM. SEE SECTION DETAIL. NEW TILE MUST COVER REMOVED OLD TILE LOCATIONS. (V.I.F.)
10. 5/8" HI-IMPACT GYP BOARD ON 1 5/8" METAL HAT CHANNEL AT 24" O.C. ON EXISTING EXPOSED TECTUM PANELS TIGHT TO CEILING. SEE DETAIL 4/A1.1BV.
11. PAINT ALL WALLS IN ROOM 10'-0" HIGH. SEE FINISH SCHEDULE AND ELEVATION FOR MORE INFO.
12. INSTALL NEW WALL MTD. ROOM SIGNAGE IN CORRIDOR PER DETAILS
13. PROVIDE NEW RUBBER STAIR TREAD AND NOSING ON ALL STEPS
14. INSTALL NEW DRINKING FOUNTAIN PER MECH. DWGS. MINIMUM 1 BOTTLE FILLER PER FLOOR.
15. PROVIDE NEW TOILET AND URINALS. PROVIDE NEW SINKS AS INDICATED. (SEE MECHANICAL)
16. PROVIDE NEW TOILET PARTITIONS. REFER TO SPEC.
17. PROVIDE NEW TOILET ACCESSORIES. REFER TO SPEC.
18. LOCATION OF NEW SOUND SYSTEM RACK.
19. PAINT CMU WALLS ABOVE CERAMIC TILE WAINSCOT UP TO CEILING.
20. NEW ACOUSTIC CEILING PADS IN EXISTING GRID
21. PROVIDE AND INSTALL NEW LVT. SEE FINISH SCHEDULE.
22. PROVIDE AND INSTALL NEW CPT. SEE FINISH SCHEDULE.
23. PROVIDE AND INSTALL NEW PCT FLOOR. REFER TO SPECS.
24. NEW FURNITURE (BY OTHERS).
25. PROVIDE AND INSTALL NEW P. LAM. CASEWORK PER ELEVATION.
26. REMOVE ELEVATED FLOOR AND RELOCATE ALL UTILITIES TO WALL FOR WALL MOUNTED FIXTURES. PROVIDE NEW CONCRETE SLAB TO MATCH HEIGHT AND SLOPE OF ADJACENT FLOOR.
27. PROVIDE NEW WHITEBOARD, TACK BOARD AND SMART BOARD LAYOUT AS DETAIL ON SHEET A8.3
28. INSTALL NEW WINDOW SYSTEM TO FIT EXISTING M.O. (V.I.F.)
29. NEW CONCRETE SLAB FOR NEW CHILLER VERIFY DIMENSIONS WITH MECHANICAL
30. INSTALL NEW CEILING COMPLETE. CONNECT TO TO STRUCTURE AS REQUIRED. SEE FINISH SCHEDULE.
31. SAND/ PREP/ PAINT EXISTING METAL SIDING. REFER TO SPECS.
32. PROVIDE NEW WALL CONSTRUCTION - SEE DETAILS
33. INFILL DOOR OPENING WITH CMU TO MATCH THICKNESS AND TOOTH IN TO MATCH COURSING AT JAMBS. TOOTH IN NEW BRICK VENEER AT CORRIDOR WALLS TO MATCH EXISTING IF APPLICABLE.
34. NEW 4" CONC. FLOOR W/6x6, W1.4x1.4 W.W.F. ON VAPOR BARRIER ON 8" MIN. COMP. FILL. MATCH ELEVATION OF ADJACENT FLOOR.
35. PAINT EXPOSED CEILING.PROVIDE FOR UP TO 3 ACCENT COLORS. PAINT ALL EXPOSED NEW AND EXISTING DUCTS, JOISTS, ETC.
36. SAND/ PREP/ COAT EXISTING PANELS IN STOREFRONT SYSTEM. SEE SPEC.
37. NEW CUSTOM ROUND WINDOW ALUM. FRAME W/1" INSUL. GLASS,. SEE ELEVATIONS.
38. NEW OFFICE FURNITURE (BY OTHERS)
39. INSTALL WALK-OFF CARPET IN ENTIRE ROOM OR TO THE TRANSITION SHOWN ON DWGS
40. INSTALL NEW TACKBOARD
41. INSTALL NEW TACKBOARD AS ALTERNATE BID
42. PAINT GYP. BD. WALL FULL HEIGHT WITH MARKER BOARD PAINT.
43. TECHNOLOGY CABINET ON WALL
44. NEW WINDOW TREATMENTS ON ALL WINDOWS IN ROOM.
45. PAINT EXISTING WOOD CABINETS (EXTERIOR SURFACE ONLY.) TYPICAL FOR ALL CLASSROOMS.
46. REINSTALL P. LAM. CABINETS (SEE ELEVATIONS)
47. NEW P.LAM. WARDROBE CABINET SEE ELEVATIONS.

DEMO PLAN NOTES: (CONTINUED)

PLEASE NOTE:
NOT ALL DEMO PLAN KEYNOTES APPLY TO EACH BUILDING.

45. REMOVE EXISTING P. LAM. CABINETS AND SALVAGE FOR RE-INSTALLATION IN EXACT SAME LOCATION ON NEW WALL. SEE ELEVATIONS AND DETAILS.
47. EXISTING P. LAM. CABINETS TO REMAIN.
48. REMOVE ALL EXISTING WOOD SHELVING COMPLETE IN ROOM. PATCH WALLS FLUSH TO MATCH EXISTING FINISHES.
50. REMOVE CONCRETE SUPPORTED SLAB CONSTRUCTION COMPLETE INCLUDING FOUNDATION FULL DEPTH. FILL HOLE WITH COMPACTED FILL.
54. REMOVE P.LAM. CABINETS & COUNTER TOP
55. REMOVE NON-LOAD BEARING WALL CONSTRUCTION ABOVE EXISTING GLASS/FRAMING TO BE REMOVED (V.I.F.)
56. DOCUMENT EXISTING SIZE OF COUNTERTOP FOR NEW FABRICATION. REMOVE PLAM COUNTER TOP AND SPLASH. REMOVE EXISTING SINK.
57. REMOVE FASCIA BRICK.
58. REMOVE MECHANICAL EQUIPMENT. PREP OPENING FOR MASONRY INFILL. (SEE MECH.)

ELEMENTARY SCHOOL - DEMO PLAN NOTES:

PLEASE NOTE:
NOT ALL DEMO PLAN KEYNOTES APPLY TO EACH BUILDING.

1. REMOVE EXISTING DOOR AND HARDWARE COMPLETE.
2. REMOVE EXISTING FRAME AND GLASS COMPLETE.
3. REMOVE EXISTING TILE OR PAINTED MURAL ON WOOD SUBSTRATE . RELOCATE BASED ON OWNER DIRECTION
4. REMOVE PORTION OF EXISTING WALL FOR NEW DOOR, DUCT OR WINDOW OPENING PATCH FLOOR LEVEL. PROVIDE LINTEL FOR OPENING. PER DETAILS.
5. REMOVE EXISTING WALL COMPLETE. (SHOWN DASHED) INCLUDING ALL DOORS, GLAZING, COAT HOOKS, ETC. AS INDICATED BY DRAWINGS. GRIND FLOOR SMOOTH FOR NEW FLOORING OR CONSTRUCTION AS INDICATED IN NEW WORK PLAN. PATCH ADJACENT WALLS TO MATCH EXISTING FINISHES (V.I.F.)
6. REMOVE WALLPAPER AND SKIM COAT AND SAND ALL WALLS. PREP FOR NEW PAINT AS REQ'D
7. REMOVE EXISTING COAT HOOKS. PATCH WALL FLUCH AND PAINT TO MATCH EXISTING COLOR.
8. REMOVE EXISTING WALL TILE COMPLETE. PREP FOR NEW FINISH AS REQUIRED AND INDICATED ON NEW WORK PLAN.
9. REMOVE EXISTING CORRIDOR SECURITY GATE AND WALL MOUNTED RACK, CASE BRACKETS ETC. COMPLETE. PATCH HOLES IN WALLS AND FLOOR AS REQUIRED TO MATCH EXISTING FINISHES. INFILL MASONRY OPENINGS WITH BRICK/ CMU TO MATCH COURSING (V.I.F.)
10. REMOVE EXISTING MASONRY SCREEN WALL & 48"D CONCRETE FOOTINGS , FULL DEPTH AS SHOWN DASHED. FILL HOLE WITH COMPACTED FILL FULL DEPTH
11. REMOVE EXISTING DOOR, FRAME AND HARDWARE COMPLETE
12. REMOVE ALL EXISTING WALL MOUNTED SIGNAGE PATCH WALLS FLUSH TO MATCH EXISTING SURFACES AND PREP FOR NEW SIGNAGE.
13. REMOVE EXISTING PORCELAIN DRINKING FOUNTAIN. PATCH SURFACES TO MATCH AND PREP FOR INSTALLATION OF NEW DRINKING FOUNTAIN.
14. REMOVE ALL WALL MOUNTED TOILET ACCESSORIES AND TOILET PARTITIONS IN ROOM. PATCH ALL HOLES IN WALLS AND FLOORS. FLUSH TO MATCH EXISTING FINISHES.
15. REMOVE ALL PLUMBING FIXTURES. SEE MECH. DRAWINGS.
16. REMOVE EXISTING CONCRETE FLOOR SLAB COMPLETE (4 - 6" THICK MIN). AS INDICATED ON PLANS.
17. REMOVE EXISTING OVERHANG CONSTRUCTION COMPLETE
18. REMOVE EXISTING CARPET, TRANSITION STRIP, RESIL BASE, ETC. SCRAPE ALL MASTICE & ADHESIVES FROM CONCRETE FLOOR AS REQUIRED (DO NOT USE CHEMICAL REMOVAL TECHNIQUES). FILL AND LEVEL ALL VIODS, CRACKS, ETC TO PREP FLOOR FOR NEW FLOOR FINISHES AND BASE AS REQ'D AND INDICATED ON DRAWINGS AND SCHEDULES.
19. REMOVE EXISTING VCT, TRANSITION STRIPS, RESIL BASE, ETC. SCRAPE ALL MASTICE & ADHESIVES FROM CONCRETE FLOOR AS REQUIRED. (DO NOT USE CHEMICAL REMOVAL TECHNIQUES). FILL AND LEVEL ALL VOIDS, CRACKS, ETC. FULL DEPTH (+/-46") TO PREP FLOOR FOR NEW FLOOR FINISHES AND BASE AS REQ'D AND INDICATED ON DRAWINGS AND SCHEDULES.
20. REMOVE EXISTING CHILLER AND SLAB FOUNDATION COMPLETE. PREP SITE FOR NEW CONCRETE SLAB AND FOUNDATION.
21. REMOVE EXISTING PCT, TRANSITIONS, PVT BASE, ETC. SCRAPE ALL MORTER BEDS FROM CONCRETE FLOOR AS REQUIRED. (DO NOT USE CHEMICAL REMOVAL TECHNIQUES). FILL AND LEVEL ALL VOIDS, CRACKS, ETC. TO PREP FLOOR FOR NEW FLOOR FINISHES AND BASE AS REQ'D AND INDICATED ON DRAWINGS AND SCHEDULES.
22. REMOVE EXISTING COLUMN AND CONCRETE FOUNDATIONS FULL DEPTH.
23. REMOVE EXISTING P. LAM. CASEWORK AND/OR FURNITURE COMPLETE. PATCH WALLS AND FLOORS AS REQ'D TO MATCH ADJACENT FINISHES.
24. REMOVE EXISTING 12" LOCKS AND TRIM. PREP TO RECEIVE NEW LOCKER.
25. REMOVE PORTION OF EXISTING WALL FOR NEW DUCT. PROVIDE PC CONCRETE LINTEL. SEE MECH. FOR SIZE.
26. REMOVE EXISTING TACK BOARDS. SCRAPE GLUE PODS FROM WALLS.
27. REMOVE EXISTING MARKER/CHALK BOARDS. SCRAPE GLUE PODS FROM WALLS.
28. REMOVE EXISTING TACK BOARDS SCRAPE GLUE PODS FROM WALL (ALTERNATE BID)
29. REMOVE LAY-IN CEILING SYSTEM COMPLETE INCLUDING SUPPORT FRAMING/WIRE. AND ALL COMPONENTS: I.E. SPEAKERS, LIGHTS ETC.
30. REMOVE EXISTING CONCRETE SLAB +/- 6" THICK AND ALL CONC. FDN FULL DEPTH IF PRESENT (V.I.F.
31. REMOVE EXISTING RECEPTION COUNTER COMPLETE. PATCH WALLS & FLOORS AS REQ'D TO MATCH ADJACENT FINISHES.
32. REMOVE EXISTING HARD CEILING CONSTRUCTION COMPLETE. INCLUDING ALL SUPPORT FRAMING, BRACING, ETC.
33. REMOVE EXISTING TRACK + SUPPORTS. PATCH HOLES IN WALLS FLUSH AS REQ'D TO MATCH EXISTING FINISHES.
34. REMOVE LAY-IN CEILING TILES, GRID TO REMAIN.
35. REMOVE EXISTING WOOD/GLASS FRAMING SYSTEM COMPLETE. PATCH WALLS & FLOORS AS REQ'D TO MATCH EXISTING FINISHES.
36. EXISTING STEEL COLUMN TO REMAIN.
37. REMOVE STEEL GUARDRAIL COMPLETE - PATCH HOLES IN BRICK WITH NEW BRICK TO MATCH EXISTING (V.I.F.)
38. REMOVE EXISTING WINDOW TREATMENTS COMPLETE INCLUDING TRACK, ETC. IN ENTIRE ROOM.
39. REMOVE ALL EXISTING RACEWAYS FROM WALL. PATCH HOLES FLUSH TO MATCH ADJACENT SURFACES.
40. EXISTING TILE FLOOR AND MASTIC TO BE REMOVED BY ABATEMENT CONTRACTOR
41. EXISTING DOOR FRAME TO BE REMOVED BY ABATEMENT CONTRACTOR
42. EXISTING HARD CEILING TO BE REMOVED BY ABATEMENT CONTRACTOR
43. REMOVE EXISTING SHELF AND BOOT SHELF COMPLETE. PATCH HOLES IN WALL FLUSH TO MATCH EXISTING FINISHES.
44. REMOVE RECESSED F.E.C. FILL OPENING WITH CMU TO MATCH COURSING AND THICKNESS (V.I.F.)

WA

WAKELY ASSOCIATES, INC.
ARCHITECTS

30500 VAN DYKE AVENUE
SUITE M-7
WARREN, MICHIGAN 48093
PH: 586.573.4100
FX: 586.573.0822
www.WakelyAIA.com

FARMINGTON PUBLIC SCHOOLS - 2015 BOND
2018 PROJECTS
KENBROOK & BEECHVIEW ELEMENTARY SCHOOLS

DEMO PLAN KEY NOTES
FLOOR PLAN KEY NOTES
REFL. CLG PLAN KEY NOTES
WALL TYPES

PRELIMINARY ☐
DESIGN DEVELOPMENT ☐
CONSTRUCTION ■
FINAL RECORD ☐

DRAWN BY NJL
CHECKED BY BJS

REVISIONS

DATE: December 12, 2017

SHEET NO.
G4.2

JOB NO. 171712A

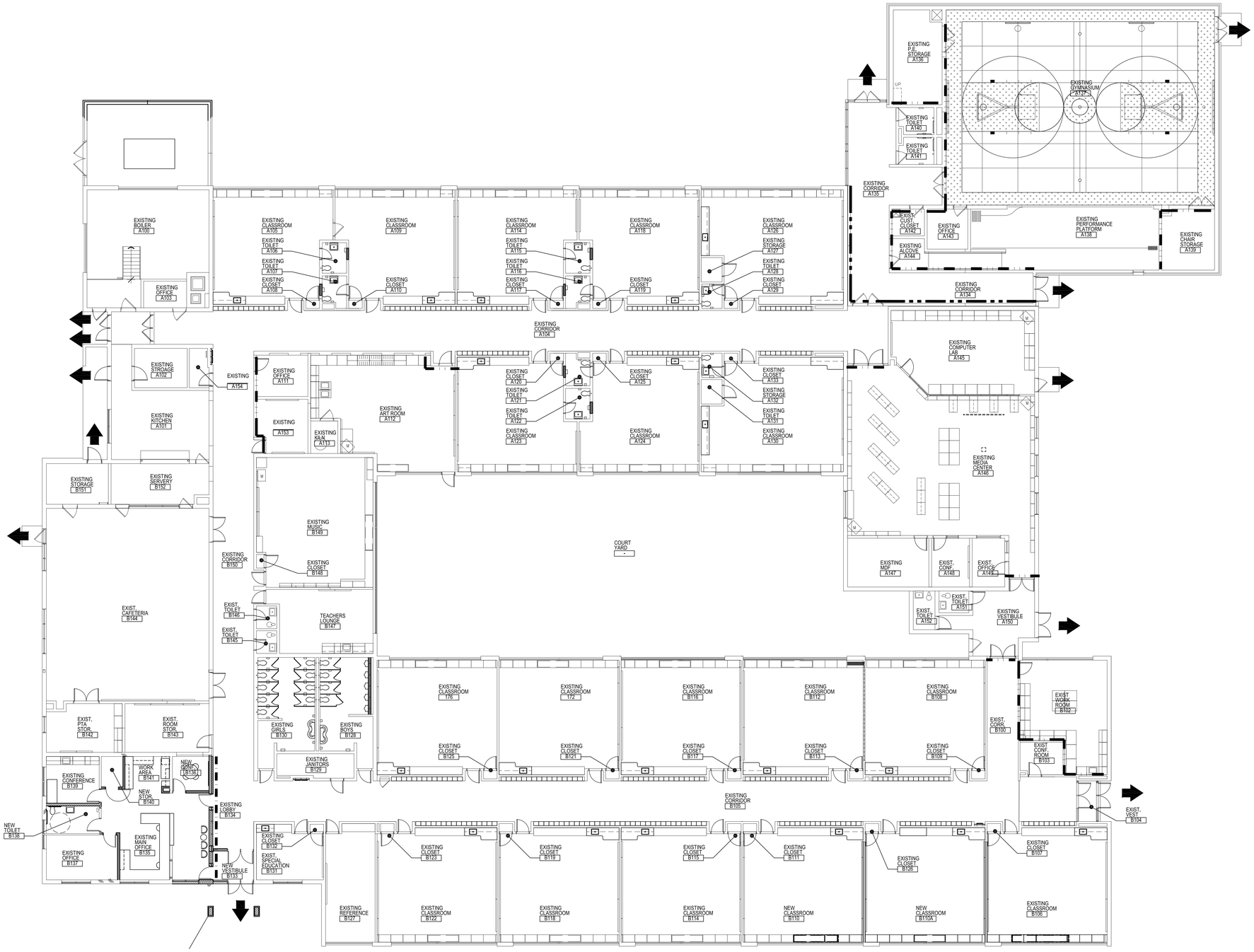

1 COMPOSITE PLAN

SCALE: 3/32" = 1'-0"

BUILDING CODE SUMMARY

PROJECT: BEECHVIEW ELEMENTARY SCHOOL

ADDRESS: 26850 WESTMEATH CT.
FARMINGTON HILLS, MI 48334

PROPOSED USE: K–12 EDUCATIONAL FACILITY

REFERENCE CODES:

NFPA: 101 LIFE SAFETY CODE, 2012 EDITION
BUILDING: 2015 MICHIGAN BUILDING CODE
MECHANICAL: 2015 MICHIGAN BUILDING CODE
PLUMBING: 2015 MICHIGAN BUILDING CODE
ELECTRICAL: 2014 MICHIGAN ELECTRICAL CODE
RENOVATION: 2015 MICHIGAN REHABILITATION CODE

BUILDING DATA

USE GROUP: E

( ) ASSEMBLY:_____
( ) BUSINESS
(X) EDUCATIONAL
( ) FACTORY–INDUSTRIAL–LOW HAZARD
( ) FACTORY–INDUSTRIAL–MODERATE HAZARD
( ) HIGH HAZARD:_____
( ) INSTITUTIONAL: 1–3 CONDITIONS IV
( ) MERCANTILE
( ) RESIDENTIAL:_____
( ) STORAGE–LOW HAZARD
( ) STORAGE–MODERATE HAZARD
( ) UTILITY, MISCELLANEOUS

CONSTRUCTION TYPE:

( ) TYPE 1A – PROTECTED
( ) TYPE 1B – PROTECTED
( ) TYPE 2A – PROTECTED
( ) TYPE 2B – PROTECTED
(X) TYPE 2C – UNPROTECTED
( ) TYPE 3 – PROTECTED
( ) TYPE 3 – UNPROTECTED
( ) TYPE 4 – HEAVY TIMBER
( ) TYPE 5 – PROTECTED
( ) TYPE 5 – UNPROTECTED

( ) MIXED CONSTRUCTION TYPE:_____

SPRINKLED? ( ) REQUIRED ( ) PROVIDED ( ) PARTIAL

BUILDING HEIGHT PERMITTED: 55'
ACTUAL BUILDING HEIGHT: 32' (AT GYMNASIUM)
MEZZANINE: ( ) YES (X) NO

HIGH RISE: ( ) YES (X) NO

GROSS BUILDING AREA (EXISTING):

GRADE LEVEL: 44,451 S.F.

NOTE: RENOVATION DOES NOT INCREASE BUILDING S.F. OR OCCUPANCY LOAD

TOTAL AREA: 44,451 S.F.

AREA MODIFICATION APPLIED?
( ) YES (X) NO

PERIMETER MODIFICATIONS APPLIED?
( ) YES (X) NO

LIFE SAFETY SYSTEMS

EMERGENCY LIGHTING AND EXIT SIGNS	(X) REQUIRED	(X) PROVIDED
FIRE ALARMS	(X) REQUIRED	(X) PROVIDED
SMOKE DETECTION SYSTEMS	(X) REQUIRED	(X) PROVIDED
PANIC HARDWARE	(X) REQUIRED	(X) PROVIDED
FIRE SUPPRESSION SYSTEM	( ) REQUIRED	( ) PROVIDED
STANDPIPE SYSTEM	( ) REQUIRED	( ) PROVIDED

EXIT REQUIREMENTS

DEAD END LIMIT–MAXIMUM CONDITION (1018.4):
ALLOWED: 20'
ACTUAL: 19'–4"

TRAVEL DISTANCE TO EXIT–MAXIMUM CONDITION (TABLE 1016.1):
ALLOWED: 200'
ACTUAL: –

COMMON PATH OF TRAVEL (1014.3):
ALLOWED: 75'
ACTUAL:

NUMBER OF EXITS (1021):
REQUIRED: 2
PROVIDED: 12

DESIGN LOADS: (SEE STRUCTURAL DRAWINGS)

LEGEND:

EXISTING 2 HOUR RATED FIRE WALL CONSTRUCTION WITH 90 MINUTE OPENING PROTECTIVE.

EXISTING 1 HOUR FIRE RATED SEPARATION WALL WITH 20 MINUTE DOOR OPENING PROTECTIVE.

EXTERIOR EGRESS EXIT

NEW 1 HOUR FIRE RATED SEPARATION WALL WITH 20 MINUTE DOOR OPENING PROTECTIVE.

WAKELY ASSOCIATES, INC.
ARCHITECTS

30500 VAN DYKE AVENUE
SUITE M-7
WARREN, MICHIGAN 48093
PH: 586.573.4100
FX: 586.573.0822
www.WakelyAIA.com

FARMINGTON PUBLIC SCHOOLS - 2015 BOND
2018 PROJECTS
KENBROOK & BEECHVIEW ELEMENTARY SCHOOLS

BEECHVIEW ELEMENTARY SCHOOL

COMPOSITE PLAN

PRELIMINARY ☐
DESIGN DEVELOPMENT ☐
CONSTRUCTION ☐
FINAL RECORD ■

DRAWN BY NJL
CHECKED BY BJS

REVISIONS

DATE: December 6, 2017

SHEET NO.
LS1.0BV

JOB NO. 171712A

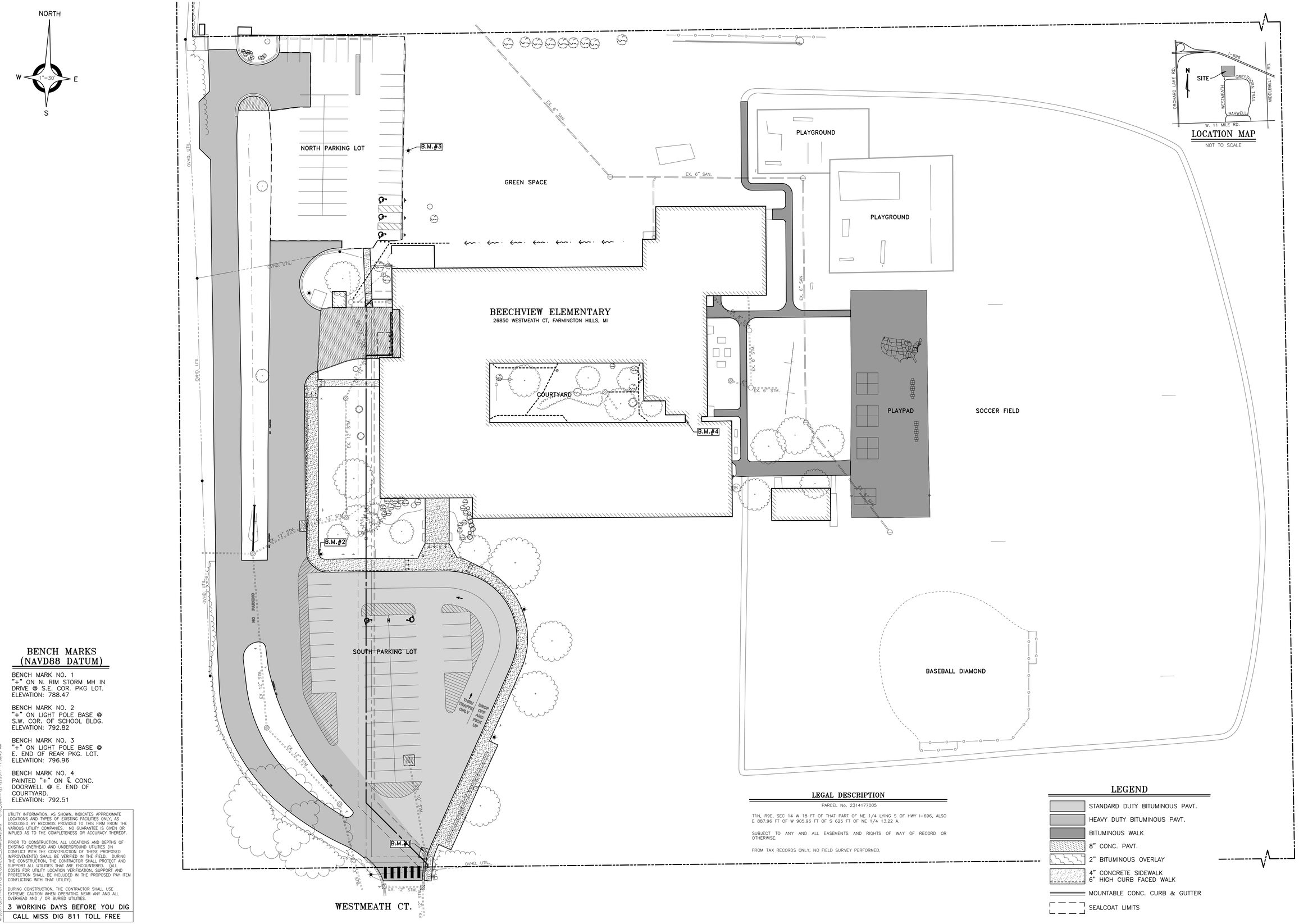

BENCH MARKS (NAVD88 DATUM)

BENCH MARK NO. 1
"+" ON N. RIM STORM MH IN DRIVE @ S.E. COR. PKG LOT.
ELEVATION: 788.47

BENCH MARK NO. 2
"+" ON LIGHT POLE BASE @ S.W. COR. OF SCHOOL BLDG.
ELEVATION: 792.82

BENCH MARK NO. 3
"+" ON LIGHT POLE BASE @ E. END OF REAR PKG. LOT.
ELEVATION: 796.96

BENCH MARK NO. 4
PAINTED "+" ON ℄ CONC. DOORWELL @ E. END OF COURTYARD.
ELEVATION: 792.51

UTILITY INFORMATION, AS SHOWN, INDICATES APPROXIMATE LOCATIONS AND TYPES OF EXISTING FACILITIES ONLY, AS DISCLOSED BY RECORDS PROVIDED TO THIS FIRM FROM THE VARIOUS UTILITY COMPANIES. NO GUARANTEE IS GIVEN OR IMPLIED AS TO THE COMPLETENESS OR ACCURACY THEREOF.

PRIOR TO CONSTRUCTION, ALL LOCATIONS AND DEPTHS OF EXISTING OVERHEAD AND UNDERGROUND UTILITIES (IN CONFLICT WITH THE CONSTRUCTION OF THESE PROPOSED IMPROVEMENTS) SHALL BE VERIFIED IN THE FIELD. DURING THE CONSTRUCTION, THE CONTRACTOR SHALL PROTECT AND SUPPORT ALL UTILITIES THAT ARE ENCOUNTERED. (ALL COSTS FOR UTILITY LOCATION VERIFICATION, SUPPORT AND PROTECTION SHALL BE INCLUDED IN THE PROPOSED PAY ITEM CONFLICTING WITH THAT UTILITY).

DURING CONSTRUCTION, THE CONTRACTOR SHALL USE EXTREME CAUTION WHEN OPERATING NEAR ANY AND ALL OVERHEAD AND / OR BURIED UTILITIES.

3 WORKING DAYS BEFORE YOU DIG

CALL MISS DIG 811 TOLL FREE

M:\0577\0577-0101\DWG\CVIL\00_ENGPLANS.DWG C1.0_Gen--12/12/2017 11:58:45 AM

LEGAL DESCRIPTION

PARCEL No. 2314177005

T1N, R9E, SEC 14 W 18 FT OF THAT PART OF NE 1/4 LYING S OF HWY I-696, ALSO E 887.96 FT OF W 905.96 FT OF S 625 FT OF NE 1/4 13.22 A.

SUBJECT TO ANY AND ALL EASEMENTS AND RIGHTS OF WAY OF RECORD OR OTHERWISE.

FROM TAX RECORDS ONLY, NO FIELD SURVEY PERFORMED.

LEGEND

- STANDARD DUTY BITUMINOUS PAVT.
- HEAVY DUTY BITUMINOUS PAVT.
- BITUMINOUS WALK
- 8" CONC. PAVT.
- 2" BITUMINOUS OVERLAY
- 4" CONCRETE SIDEWALK / 6" HIGH CURB FACED WALK
- MOUNTABLE CONC. CURB & GUTTER
- SEALCOAT LIMITS

WA

WAKELY ASSOCIATES, INC.
ARCHITECTS

30500 VAN DYKE AVENUE
SUITE M-7
WARREN, MICHIGAN 48093
PH: 586.573.4100
FX: 586.573.0822
www.WakelyAIA.com

ANDERSON, ECKSTEIN AND WESTRICK INC.
51301 Schoenherr Road,
Shelby Township, Michigan 48315
Phone: 586-726-1234
Fax: 586-726-8790
AEW NO. 0577-0101

FARMINGTON PUBLIC SCHOOLS
2017 RENOVATIONS
BEECHVIEW ELEMENTARY RENOVATIONS

GENERAL PLAN

PRELIMINARY ☐
DESIGN DEVELOPMENT ■
CONSTRUCTION ☐
FINAL RECORD ☐

DRAWN BY KJP
CHECKED BY JS

REVISIONS

11/22/17	PRELIMINARY BID
12/08/17	SCOPING DOCS.
12/13/17	BID SETS

DATE: OCTOBER 25, 2017

SHEET NO.

C1.0

JOB NO.

NORTH

W 1"=30' E

S

CLEAR TREES AND SHRUBS AS NECESSARY FOR ROAD WIDENING (SEE SHEET C3.1)

PARKING BLOCKS

3'x30' REMOVE EXIST. BIT. PAV'T TO STONE BASE

PARKING BLOCKS

B.M.#3

EX. ASPH. PARKING LOT

REMOVE & REINSTALL SIGNS TO CENTER ALONG HANDICAP PARKING STALLS

CAUTION: EX. OVHD. UTIL. WIRES IN THIS AREA

CAUTION: EX. UGD. ELECTRIC. IN THIS AREA

CLEANOUT EX. STRUCTURE

REMOVE CONC. PAVT. FULL DEPTH. EXCAVATE AS NECESSARY FOR PROPOSED SECTION (TYP.)

REMOVE EXIST. WATER MAIN FROM GATE VALVE TO BUILDING. EXIST. WATER MAIN DEPICTED FROM RECORD PLANS. FIELD VERIFY LOCATION

REMOVE EX. BOLLARDS, FENCE POSTS & DUMPSTER ENCLOSURE (SEE ARCHITECTURAL PLANS FOR DUMPSTER ENCLOSURE DETAILS)

PROPERTY LINE (TYP.)

REMOVE EX. CONC. CURB & GUTTER (TYP.)

PROTECT EX. FLAGPOLE & BASE

REMOVE EX. CULVERT

B.M.#2

REMOVE EXISTING SIGN

REMOVE SIDEWALK FULL DEPTH (TYP.)

REMOVE EXIST. WATER MAIN FROM GATE VALVE TO BUILDING. EXIST. WATER MAIN DEPICTED FROM RECORD PLANS. FIELD VERIFY LOCATION

REMOVE EX. ASPH. PAVT. FULL DEPTH. EXCAVATE AS NECESSARY FOR PROPOSED SECTION (TYP.)

REMOVE, SALVAGE & RESET EX. BIKE RACKS UPON COMPLETION OF SIDEWALK CONSTRUCTION

CAUTION: EX. OVHD. UTIL. WIRES IN THIS AREA

B.M.#1

CAUTION: EX. NAT. GAS ADJACENT TO WATER MAIN PER RECORDS. FIELD VERIFY WITH PROVIDER

ALL WORK IN WESTMEATH CT. R.O.W. REQUIRES PERMIT FROM CITY OF FARMINGTON HILLS

WESTMEATH CT.

ALL WORK IN R.O.W. REQUIRES CITY OF FARMINGTON HILLS R.O.W. PERMIT

SAWCUT AT NEAREST JOINT

PROPERTY LINE (TYP.)

BEECHVIEW ELEMENTARY

26850 WESTMEATH CT, FARMINGTON HILLS, MI

REMOVE EX. ASPH. WALK FULL DEPTH EXCAVATE AS NECESSARY FOR PROPOSED SECTION (TYP.)

BID ALTERNATE 2: 1" TOP COAT EX. BITUMINOUS PATH

B.M.#4

REMOVE EX. ASPH. PAVT. FULL DEPTH. EXCAVATE AS NECESSARY FOR PROPOSED SECTION (TYP.)

REMOVE EX. ASPH. WALK FULL DEPTH EXCAVATE AS NECESSARY FOR PROPOSED SECTION (TYP.)

BENCH MARKS (NAVD88 DATUM)

BENCH MARK NO. 1
"+" ON N. RIM STORM MH IN DRIVE @ S.E. COR. PKG LOT.
ELEVATION: 788.47

BENCH MARK NO. 2
"+" ON LIGHT POLE BASE @ S.W. COR. OF SCHOOL BLDG.
ELEVATION: 792.82

BENCH MARK NO. 3
"+" ON LIGHT POLE BASE @ E. END OF REAR PKG. LOT.
ELEVATION: 796.96

BENCH MARK NO. 4
PAINTED "+" ON ℄ CONC. DOORWELL @ E. END OF COURTYARD.
ELEVATION: 792.51

UTILITY INFORMATION, AS SHOWN, INDICATES APPROXIMATE LOCATIONS AND TYPES OF EXISTING FACILITIES ONLY, AS DISCLOSED BY RECORDS PROVIDED TO THIS FIRM FROM THE VARIOUS UTILITY COMPANIES. NO GUARANTEE IS GIVEN OR IMPLIED AS TO THE COMPLETENESS OR ACCURACY THEREOF.

PRIOR TO CONSTRUCTION, ALL LOCATIONS AND DEPTHS OF EXISTING OVERHEAD AND UNDERGROUND UTILITIES (IN CONFLICT WITH THE CONSTRUCTION OF THESE PROPOSED IMPROVEMENTS) SHALL BE VERIFIED IN THE FIELD. DURING THE CONSTRUCTION, THE CONTRACTOR SHALL PROTECT AND SUPPORT ALL UTILITIES THAT ARE ENCOUNTERED. (ALL COSTS FOR UTILITY LOCATION VERIFICATION, SUPPORT AND PROTECTION SHALL BE INCLUDED IN THE PROPOSED PAY ITEM CONFLICTING WITH THAT UTILITY).

DURING CONSTRUCTION, THE CONTRACTOR SHALL USE EXTREME CAUTION WHEN OPERATING NEAR ANY AND ALL OVERHEAD AND / OR BURIED UTILITIES.

3 WORKING DAYS BEFORE YOU DIG

CALL MISS DIG 811 TOLL FREE

NOTE: ALL ITEMS DISTURBED DURING THE REMOVAL AND REPLACEMENT OF THE WATER MAIN, SUCH AS, CURBS, PAVEMENT, PAVERS, STORM, MISC. SITE FEATURES, NOT SPECIFICALLY INDICATED FOR REPLACEMENT, SHALL BE REMOVED AND REPLACED AS PART OF THE SCOPE

LEGEND

- MILL TOP 2" OF EX. PAVT.
- REMOVE EXIST. BITUMINOUS PAVT.
- REMOVE EXIST. BITUMINOUS WALK.
- REMOVE EXIST. CONC. WALK
- REMOVE EXIST. CONC. PAVT.
- REMOVE EXIST. UGND. UTIL.
- REMOVE EXIST. CONC. CURB & GUTTER
- REMOVE EXIST. MISC. SITE FEATURES

WA

WAKELY ASSOCIATES, INC.
ARCHITECTS

30500 VAN DYKE AVENUE
SUITE M-7
WARREN, MICHIGAN 48093
PH: 586.573.4100
FX: 586.573.0822
www.WakelyAIA.com

ANDERSON, ECKSTEIN AND WESTRICK INC.
51301 Schoenherr Road,
Shelby Township, Michigan 48315
Phone: 586-726-1234
Fax: 586-726-8790
AEW NO. 0577-0101

FARMINGTON PUBLIC SCHOOLS
2017 RENOVATIONS
BEECHVIEW ELEMENTARY RENOVATIONS

REMOVAL PLAN

PRELIMINARY ☐
DESIGN DEVELOPMENT ■
CONSTRUCTION ☐
FINAL RECORD ☐

DRAWN BY KJP
CHECKED BY JS

REVISIONS

11/22/17	PRELIMINARY BID
10/06/17	SCOPING DOCS.
12/13/17	BID SETS

DATE: OCTOBER 25, 2017

SHEET NO.

C2.0

JOB NO.

M:\0577\0577-0101\DWG\CML\C0_ENGPLANS.DWG C2.0_Rem---12/12/2017 11:52:52 AM

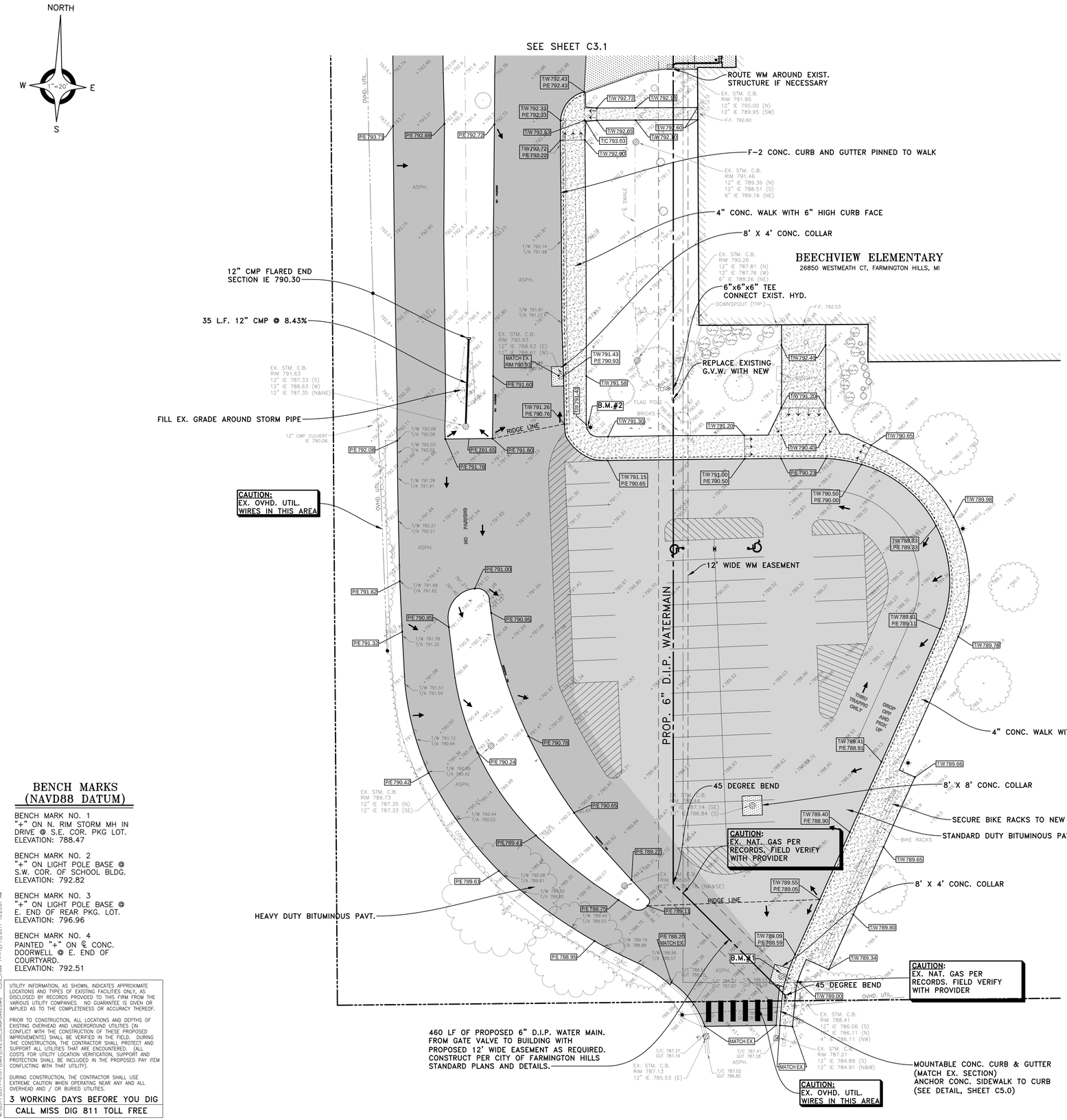

BENCH MARKS (NAVD88 DATUM)

BENCH MARK NO. 1
"+" ON N. RIM STORM MH IN DRIVE @ S.E. COR. PKG LOT.
ELEVATION: 788.47

BENCH MARK NO. 2
"+" ON LIGHT POLE BASE @ S.W. COR. OF SCHOOL BLDG.
ELEVATION: 792.82

BENCH MARK NO. 3
"+" ON LIGHT POLE BASE @ E. END OF REAR PKG. LOT.
ELEVATION: 796.96

BENCH MARK NO. 4
PAINTED "+" ON ℄ CONC. DOORWELL @ E. END OF COURTYARD.
ELEVATION: 792.51

UTILITY INFORMATION, AS SHOWN, INDICATES APPROXIMATE LOCATIONS AND TYPES OF EXISTING FACILITIES ONLY, AS DISCLOSED BY RECORDS PROVIDED TO THIS FIRM FROM THE VARIOUS UTILITY COMPANIES. NO GUARANTEE IS GIVEN OR IMPLIED AS TO THE COMPLETENESS OR ACCURACY THEREOF.

PRIOR TO CONSTRUCTION, ALL LOCATIONS AND DEPTHS OF EXISTING OVERHEAD AND UNDERGROUND UTILITIES (IN CONFLICT WITH THE CONSTRUCTION OF THESE PROPOSED IMPROVEMENTS) SHALL BE VERIFIED IN THE FIELD. DURING THE CONSTRUCTION, THE CONTRACTOR SHALL PROTECT AND SUPPORT ALL UTILITIES THAT ARE ENCOUNTERED. (ALL COSTS FOR UTILITY LOCATION VERIFICATION, SUPPORT AND PROTECTION SHALL BE INCLUDED IN THE PROPOSED PAY ITEM CONFLICTING WITH THAT UTILITY).

DURING CONSTRUCTION, THE CONTRACTOR SHALL USE EXTREME CAUTION WHEN OPERATING NEAR ANY AND ALL OVERHEAD AND / OR BURIED UTILITIES.

3 WORKING DAYS BEFORE YOU DIG

CALL MISS DIG 811 TOLL FREE

M:\0577\0577-0101\DWG\DWG\00_PLANS\DWG C1.0_Page 1---12/13/2017 10:25:07 AM

NOTE: ALL ITEMS DISTURBED DURING THE REMOVAL AND REPLACEMENT OF THE WATER MAIN, SUCH AS, CURBS, PAVEMENT, PAVERS, STORM, MISC. SITE FEATURES, NOT SPECIFICALLY INDICATED FOR REPLACEMENT, SHALL BE REMOVED AND REPLACED AS PART OF THE SCOPE

PAVING LEGEND

- STANDARD DUTY BITUMINOUS PAVT.
- HEAVY DUTY BITUMINOUS PAVT.
- BITUMINOUS WALK
- 8" CONC. PAVT.
- 2" BITUMINOUS OVERLAY
- 4" CONCRETE SIDEWALK / 6" HIGH CURB FACED WALK
- 620.00 PROPOSED GRADE
- FLOW ARROW
- 620.00 EXIST. GRADE
- T/A TOP ASPHALT
- T/C TOP CONC. CURB
- T/W TOP CONC. WALK
- G. TOP CONC. GUTTER
- P/E PAVEMENT ELEVATION
- MOUNTABLE CONC. CURB & GUTTER
- SEALCOAT LIMITS

WA

WAKELY ASSOCIATES, INC.
ARCHITECTS

30500 VAN DYKE AVENUE
SUITE M-7
WARREN, MICHIGAN 48093
PH: 586.573.4100
FX: 586.573.0822
www.WakelyAIA.com

ANDERSON, ECKSTEIN AND WESTRICK INC.
51301 Schoenherr Road,
Shelby Township, Michigan 48315
Phone: 586-726-1234
Fax: 586-726-8790
AEW NO. 0577-0101

FARMINGTON PUBLIC SCHOOLS
2017 RENOVATIONS
BEECHVIEW ELEMENTARY RENOVATIONS

PAVING & GRADING PLAN

PRELIMINARY ☐
DESIGN DEVELOPMENT ■
CONSTRUCTION ☐
FINAL RECORD ☐

DRAWN BY KJP
CHECKED BY JS

REVISIONS

11/22/17	PRELIMINARY BID
12/06/17	SCOPING DOCS
12/13/17	BID SETS

DATE: OCTOBER 25, 2017

SHEET NO.
C3.0

JOB NO.

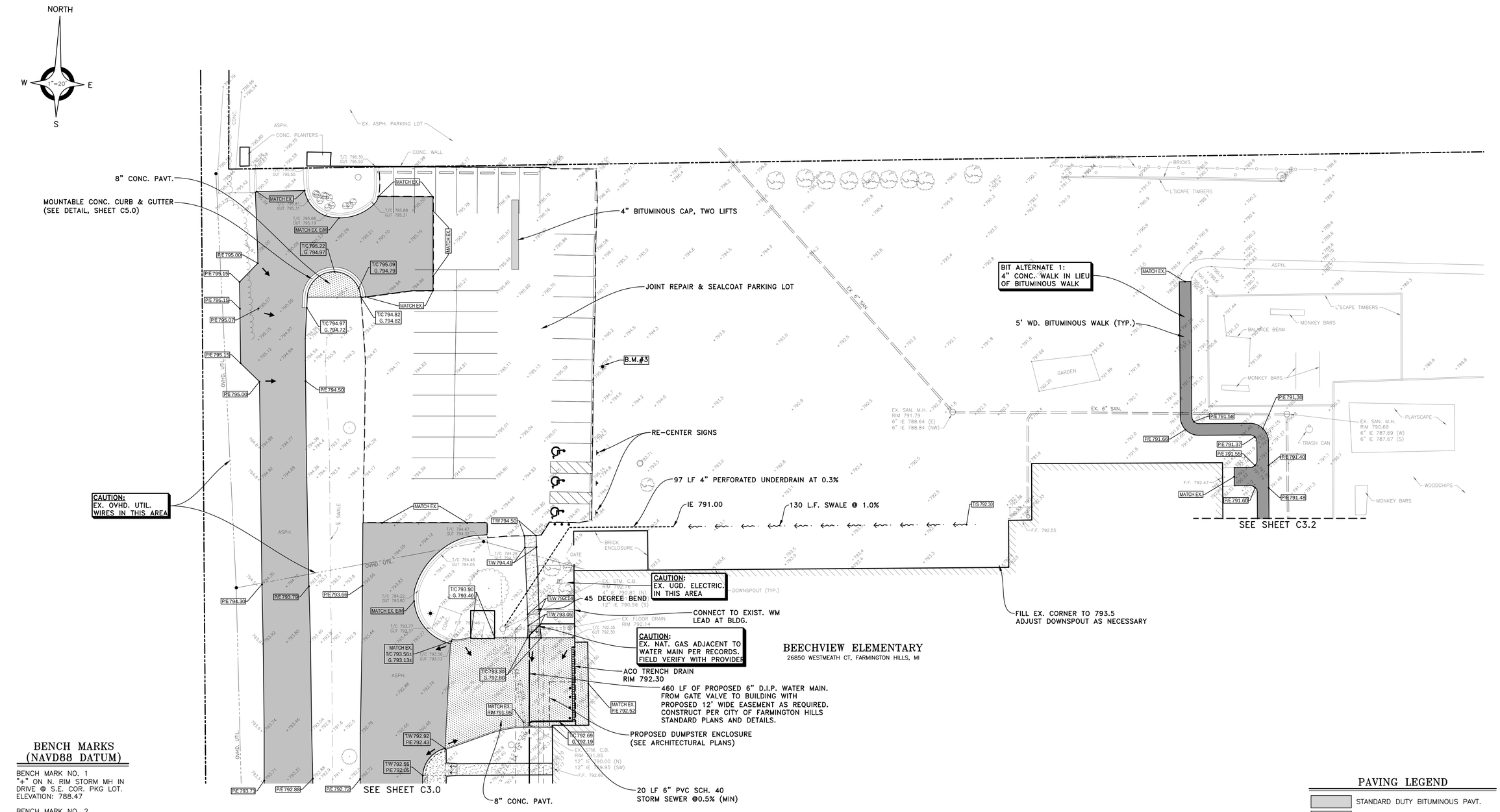

BENCH MARKS (NAVD88 DATUM)

BENCH MARK NO. 1
"+" ON N. RIM STORM MH IN DRIVE @ S.E. COR. PKG LOT.
ELEVATION: 788.47

BENCH MARK NO. 2
"+" ON LIGHT POLE BASE @ S.W. COR. OF SCHOOL BLDG.
ELEVATION: 792.82

BENCH MARK NO. 3
"+" ON LIGHT POLE BASE @ E. END OF REAR PKG. LOT.
ELEVATION: 796.96

BENCH MARK NO. 4
PAINTED "+" ON ℄ CONC. DOORWELL @ E. END OF COURTYARD.
ELEVATION: 792.51

UTILITY INFORMATION, AS SHOWN, INDICATES APPROXIMATE LOCATIONS AND TYPES OF EXISTING FACILITIES ONLY, AS DISCLOSED BY RECORDS PROVIDED TO THIS FIRM FROM THE VARIOUS UTILITY COMPANIES. NO GUARANTEE IS GIVEN OR IMPLIED AS TO THE COMPLETENESS OR ACCURACY THEREOF.

PRIOR TO CONSTRUCTION, ALL LOCATIONS AND DEPTHS OF EXISTING OVERHEAD AND UNDERGROUND UTILITIES (IN CONFLICT WITH THE CONSTRUCTION OF THESE PROPOSED IMPROVEMENTS) SHALL BE VERIFIED IN THE FIELD. DURING THE CONSTRUCTION, THE CONTRACTOR SHALL PROTECT AND SUPPORT ALL UTILITIES THAT ARE ENCOUNTERED. (ALL COSTS FOR UTILITY LOCATION VERIFICATION, SUPPORT AND PROTECTION SHALL BE INCLUDED IN THE PROPOSED PAY ITEM CONFLICTING WITH THAT UTILITY).

DURING CONSTRUCTION, THE CONTRACTOR SHALL USE EXTREME CAUTION WHEN OPERATING NEAR ANY AND ALL OVERHEAD AND / OR BURIED UTILITIES.

3 WORKING DAYS BEFORE YOU DIG

CALL MISS DIG 811 TOLL FREE

NOTE: ALL ITEMS DISTURBED DURING THE REMOVAL AND REPLACEMENT OF THE WATER MAIN, SUCH AS, CURBS, PAVEMENT, PAVERS, STORM, MISC. SITE FEATURES, NOT SPECIFICALLY INDICATED FOR REPLACEMENT, SHALL BE REMOVED AND REPLACED AS PART OF THE SCOPE

PAVING LEGEND

- STANDARD DUTY BITUMINOUS PAVT.
- HEAVY DUTY BITUMINOUS PAVT.
- BITUMINOUS WALK
- 8" CONC. PAVT.
- 2" BITUMINOUS OVERLAY
- 4" CONCRETE SIDEWALK / 6" HIGH CURB FACED WALK
- 620.00 PROPOSED GRADE
- FLOW ARROW
- 000.00 EXIST. GRADE
- T/A TOP ASPHALT
- T/C TOP CONC. CURB
- T/W TOP CONC. WALK
- G. TOP CONC. GUTTER
- P/E PAVEMENT ELEVATION
- MOUNTABLE CONC. CURB & GUTTER
- SEALCOAT LIMITS

WAKELY ASSOCIATES, INC.
ARCHITECTS

30500 VAN DYKE AVENUE
SUITE M-7
WARREN, MICHIGAN 48093
PH: 586.573.4100
FX: 586.573.0822
www.WakelyAIA.com

ANDERSON, ECKSTEIN AND WESTRICK INC.
51301 Schoenherr Road,
Shelby Township, Michigan 48315
Phone 586-726-1234
Fax 586-726-8790
AEW NO. 0577-0101

FARMINGTON PUBLIC SCHOOLS
2017 RENOVATIONS
BEECHVIEW ELEMENTARY RENOVATIONS

PAVING & GRADING PLAN

PRELIMINARY ☐
DESIGN DEVELOPMENT ■
CONSTRUCTION ☐
FINAL RECORD ☐

DRAWN BY KJP
CHECKED BY JS

REVISIONS
11/22/17 PRELIMINARY BID
12/06/17 SCOPING DOCS.
12/13/17 BID SETS

DATE: OCTOBER 25, 2017

SHEET NO.
C3.1

JOB NO.

M:\0577\0577-0101\DWG\OVHD_UTIL_ENGPLANS.DWG C3.1_Prove 2---12/13/2017 10:24:38 AM

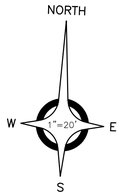

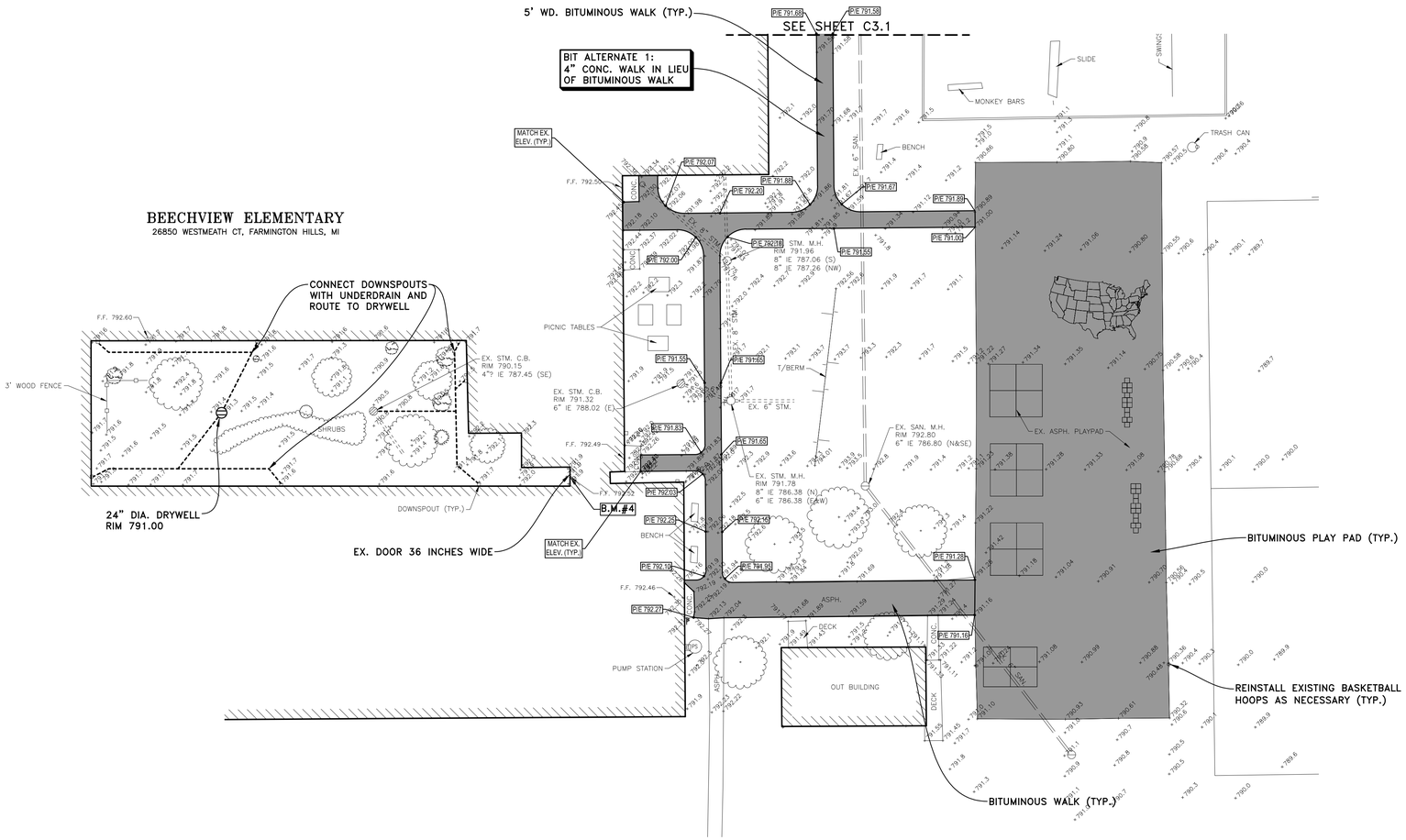

BENCH MARKS
(NAVD88 DATUM)

BENCH MARK NO. 1
"+" ON N. RIM STORM MH IN DRIVE @ S.E. COR. PKG LOT.
ELEVATION: 788.47

BENCH MARK NO. 2
"+" ON LIGHT POLE BASE @ S.W. COR. OF SCHOOL BLDG.
ELEVATION: 792.82

BENCH MARK NO. 3
"+" ON LIGHT POLE BASE @ E. END OF REAR PKG. LOT.
ELEVATION: 796.96

BENCH MARK NO. 4
PAINTED "+" ON ℄ CONC. DOORWELL @ E. END OF COURTYARD.
ELEVATION: 792.51

UTILITY INFORMATION, AS SHOWN, INDICATES APPROXIMATE LOCATIONS AND TYPES OF EXISTING FACILITIES ONLY, AS DISCLOSED BY RECORDS PROVIDED TO THIS FIRM FROM THE VARIOUS UTILITY COMPANIES. NO GUARANTEE IS GIVEN OR IMPLIED AS TO THE COMPLETENESS OR ACCURACY THEREOF.

PRIOR TO CONSTRUCTION, ALL LOCATIONS AND DEPTHS OF EXISTING OVERHEAD AND UNDERGROUND UTILITIES (IN CONFLICT WITH THE CONSTRUCTION OF THESE PROPOSED IMPROVEMENTS) SHALL BE VERIFIED IN THE FIELD. DURING THE CONSTRUCTION, THE CONTRACTOR SHALL PROTECT AND SUPPORT ALL UTILITIES THAT ARE ENCOUNTERED. (ALL COSTS FOR UTILITY LOCATION VERIFICATION, SUPPORT AND PROTECTION SHALL BE INCLUDED IN THE PROPOSED PAY ITEM CONFLICTING WITH THAT UTILITY).

DURING CONSTRUCTION, THE CONTRACTOR SHALL USE EXTREME CAUTION WHEN OPERATING NEAR ANY AND ALL OVERHEAD AND / OR BURIED UTILITIES.

3 WORKING DAYS BEFORE YOU DIG

CALL MISS DIG 811 TOLL FREE

PAVING LEGEND

	STANDARD DUTY BITUMINOUS PAVT.
	HEAVY DUTY BITUMINOUS PAVT.
	BITUMINOUS WALK/PLAY PAD
	8" CONC. PAVT.
	4" CONCRETE SIDEWALK 6" HIGH CURB FACED WALK
620.00	PROPOSED GRADE
←	FLOW ARROW
000.00	EXIST. GRADE
T/A	TOP ASPHALT
T/C	TOP CONC. CURB
T/W	TOP CONC. WALK
G.	TOP CONC. GUTTER
P/E	PAVEMENT ELEVATION
	MOUNTABLE CONC. CURB & GUTTER
	SEALCOAT LIMITS

WAKELY ASSOCIATES, INC.
ARCHITECTS

30500 VAN DYKE AVENUE
SUITE M-7
WARREN, MICHIGAN 48093
PH: 586.573.4100
FX: 586.573.0822
www.WakelyAIA.com

ANDERSON, ECKSTEIN AND WESTRICK, INC.
51301 Schoenherr Road,
Shelby Township, Michigan 48315
Phone: 586-726-1234
Fax: 586-726-8790
AEW NO. 0577-0101

FARMINGTON PUBLIC SCHOOLS
2017 RENOVATIONS
BEECHVIEW ELEMENTARY RENOVATIONS

PAVING & GRADING PLAN

PRELIMINARY ☐
DESIGN DEVELOPMENT ■
CONSTRUCTION ☐
FINAL RECORD ☐

DRAWN BY KJP
CHECKED BY JS

REVISIONS
11/22/17 PRELIMINARY BID
12/08/17 SCOPING INDEX
12/13/17 BID SETS

DATE: OCTOBER 25, 2017

SHEET NO.
C3.2

JOB NO.

M:\0577\0577-0101\DWG\CIVIL\201_ENGPLANS.DWG C3.2_Prove 3---12/13/2017 10:24:48 AM

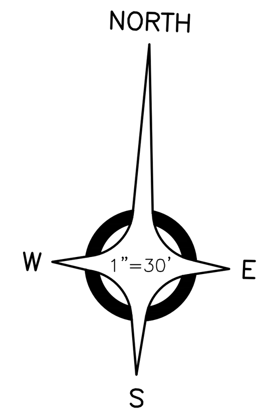

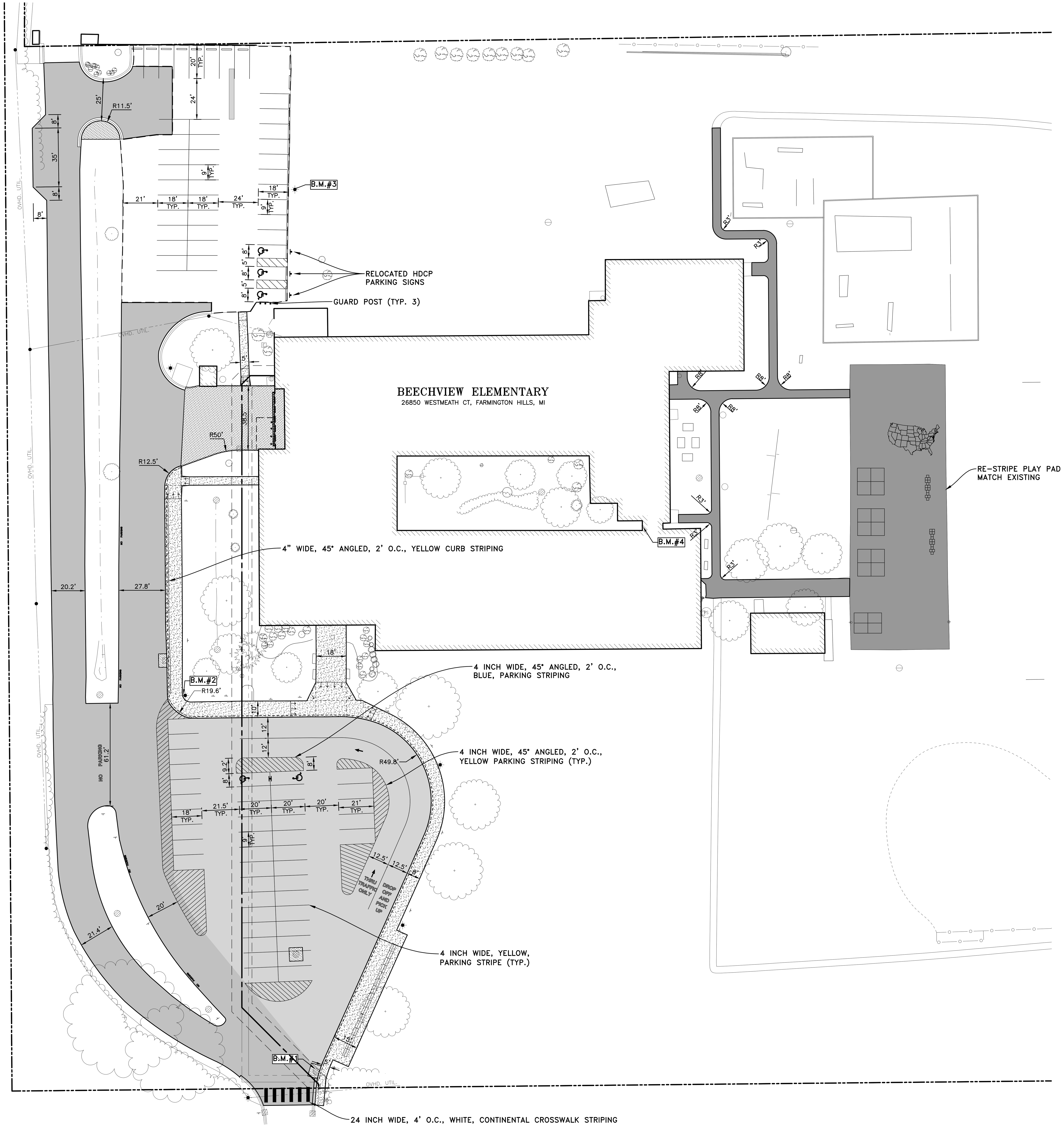

BENCH MARKS
(NAVD88 DATUM)

BENCH MARK NO. 1
"+" ON N. RIM STORM MH IN DRIVE @ S.E. COR. PKG LOT.
ELEVATION: 788.47

BENCH MARK NO. 2
"+" ON LIGHT POLE BASE @ S.W. COR. OF SCHOOL BLDG.
ELEVATION: 792.82

BENCH MARK NO. 3
"+" ON LIGHT POLE BASE @ E. END OF REAR PKG. LOT.
ELEVATION: 796.96

BENCH MARK NO. 4
PAINTED "+" ON ℄ CONC. DOORWELL @ E. END OF COURTYARD.
ELEVATION: 792.51

M:\0577\0577-0101\DWG\CIVIL\00_ENGPLANS.DWG C4.0_Geom--12/12/2017 12:00:01 PM

UTILITY INFORMATION, AS SHOWN, INDICATES APPROXIMATE LOCATIONS AND TYPES OF EXISTING FACILITIES ONLY, AS DISCLOSED BY RECORDS PROVIDED TO THIS FIRM FROM THE VARIOUS UTILITY COMPANIES. NO GUARANTEE IS GIVEN OR IMPLIED AS TO THE COMPLETENESS OR ACCURACY THEREOF.

PRIOR TO CONSTRUCTION, ALL LOCATIONS AND DEPTHS OF EXISTING OVERHEAD AND UNDERGROUND UTILITIES (IN CONFLICT WITH THE CONSTRUCTION OF THESE PROPOSED IMPROVEMENTS) SHALL BE VERIFIED IN THE FIELD. DURING THE CONSTRUCTION, THE CONTRACTOR SHALL PROTECT AND SUPPORT ALL UTILITIES THAT ARE ENCOUNTERED. (ALL COSTS FOR UTILITY LOCATION VERIFICATION, SUPPORT AND PROTECTION SHALL BE INCLUDED IN THE PROPOSED PAY ITEM CONFLICTING WITH THAT UTILITY).

DURING CONSTRUCTION, THE CONTRACTOR SHALL USE EXTREME CAUTION WHEN OPERATING NEAR ANY AND ALL OVERHEAD AND / OR BURIED UTILITIES.

3 WORKING DAYS BEFORE YOU DIG

CALL MISS DIG 811 TOLL FREE

LEGEND

- STANDARD DUTY BITUMINOUS PAVT.
- HEAVY DUTY BITUMINOUS PAVT.
- BITUMINOUS WALK
- 8" CONC. PAVT.
- 2" BITUMINOUS OVERLAY
- 4" CONCRETE SIDEWALK 6" HIGH CURB FACED WALK
- MOUNTABLE CONC. CURB & GUTTER
- SEALCOAT LIMITS

WA

WAKELY ASSOCIATES, INC.
ARCHITECTS

30500 VAN DYKE AVENUE
SUITE M-7
WARREN, MICHIGAN 48093
PH: 586.573.4100
FX: 586.573.0822
www.WakelyAIA.com

ANDERSON, ECKSTEIN AND WESTRICK INC.
51301 Schoenherr Road,
Shelby Township, Michigan 48315
Phone 586-726-1234
Fax 586-726-8780

AEW NO. 0577-0101

FARMINGTON PUBLIC SCHOOLS
2017 RENOVATIONS
BEECHVIEW ELEMENTARY RENOVATIONS

STRIPING AND GEOMETRICS PLAN

PRELIMINARY ☐
DESIGN DEVELOPMENT ■
CONSTRUCTION ☐
FINAL RECORD ☐

DRAWN BY KJP
CHECKED BY JS

REVISIONS

11/22/17	PRELIMINARY BID
12/06/17	SCOPING DOCS
12/13/17	BID SETS

DATE: OCTOBER 25, 2017

SHEET NO.

C4.0

JOB NO.

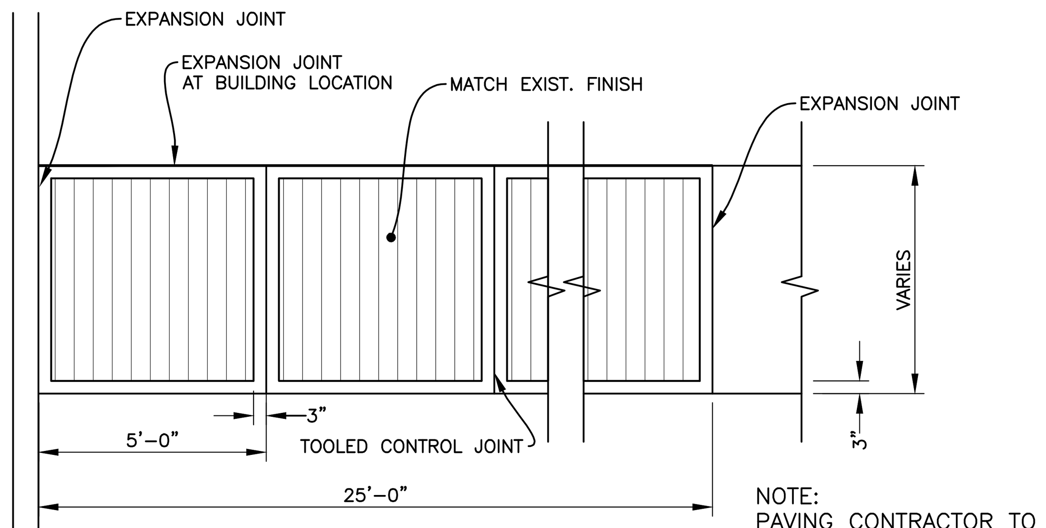

NOTE:
PAVING CONTRACTOR TO JOINT PAVEMENT AS PER INDUSTRY STANDARDS.

TYPICAL SIDEWALK JOINTING AND FINISH
NOT TO SCALE

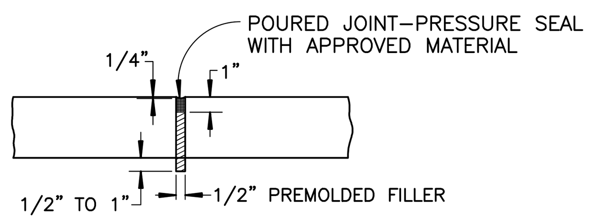

EXPANSION JOINT
NOT TO SCALE

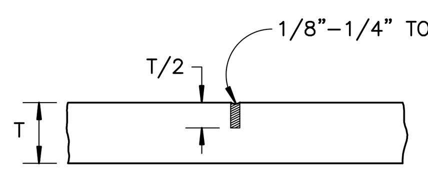

CONTRACTION (CONTROL) JOINT
NOT TO SCALE

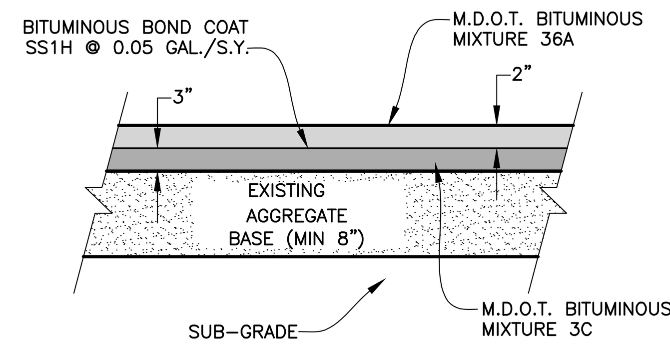

BITUMINOUS PAVEMENT SECTION
NOT TO SCALE
(HEAVY DUTY)

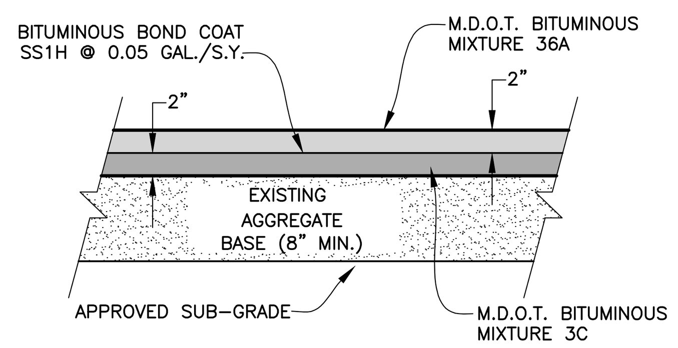

BITUMINOUS PAVEMENT SECTION
NOT TO SCALE
(STANDARD DUTY)

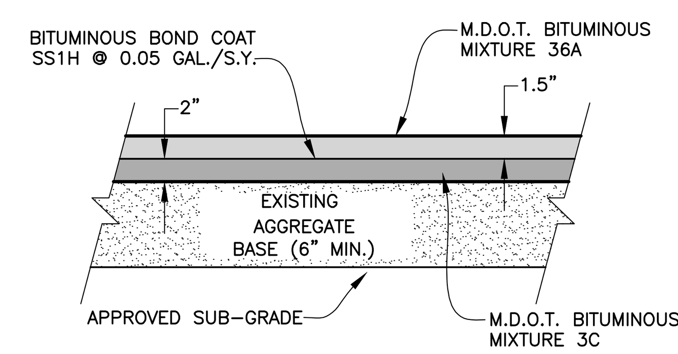

BITUMINOUS PAVEMENT SECTION
NOT TO SCALE
(LIGHT DUTY: PATH/PLAY PAD)

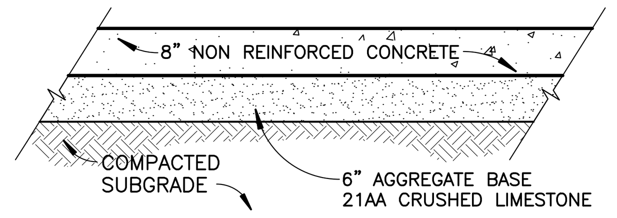

TYPICAL 8" CONCRETE PAVEMENT SECTION
NOT TO SCALE

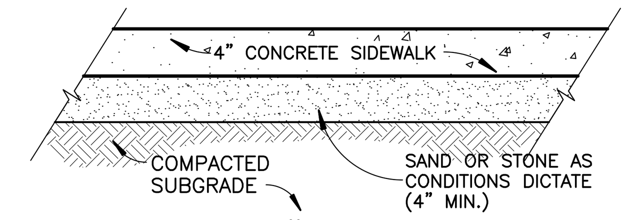

TYPICAL 4" CONCRETE SIDEWALK SECTION
NOT TO SCALE

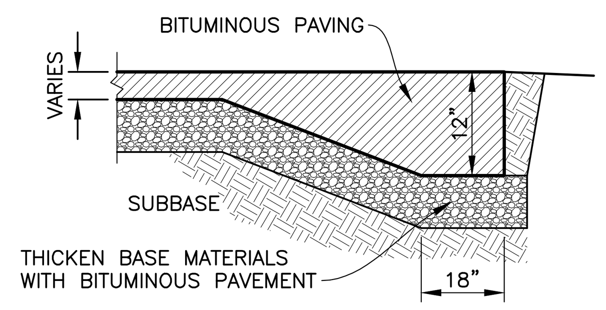

HMA THICKENED EDGE DETAIL
NOT TO SCALE

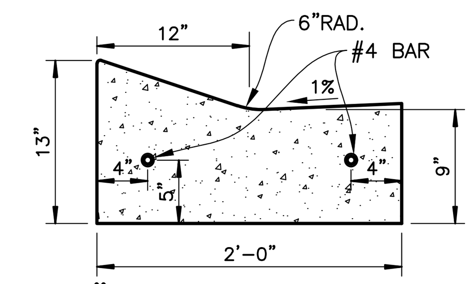

4" MOUNTABLE CURB
NOT TO SCALE

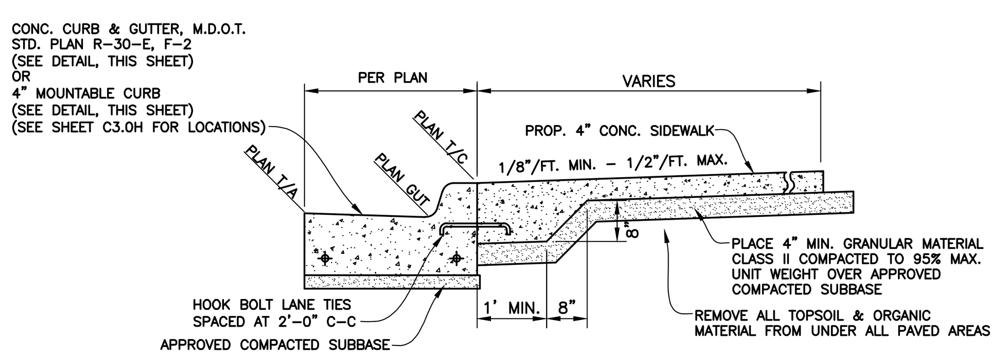

CONCRETE SIDEWALK ANCHORAGE BEHIND CONC. CURB
NOT TO SCALE

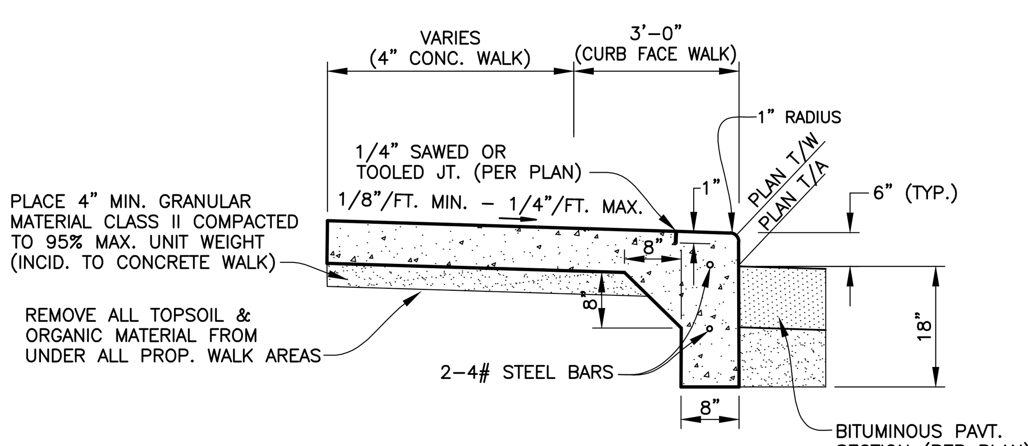

TYPICAL CONCRETE WALK WITH STANDARD CONCRETE CURB FACE
NOT TO SCALE

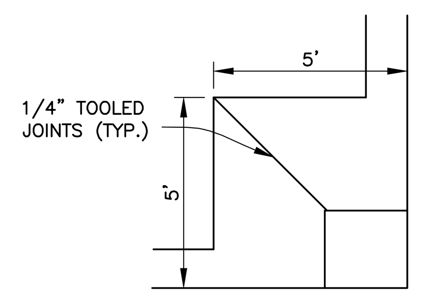

PLAN VIEW – CURB (CORNER)

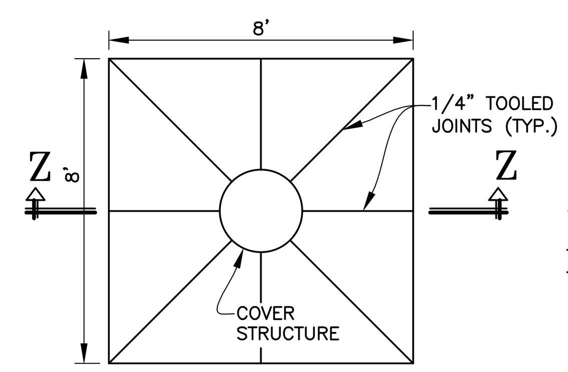

PLAN VIEW – PAVEMENT

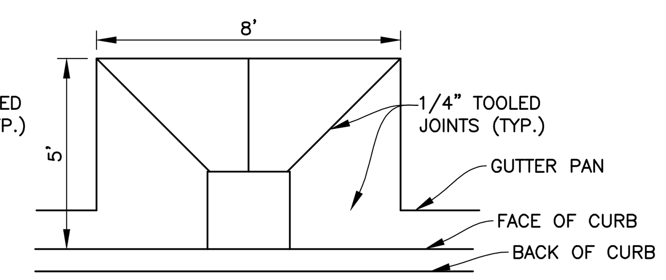

PLAN VIEW – CURB (STRAIGHT)

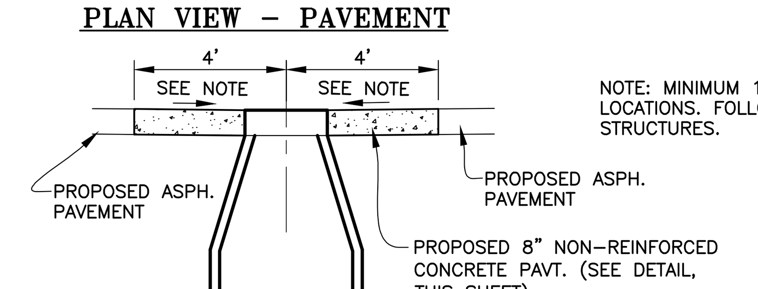

NOTE: MINIMUM 1.00% SLOPE AT CATCH BASIN LOCATIONS. FOLLOW PAVEMENT SLOPE AT OTHER STRUCTURES.

SECTION Z–Z

CONCRETE COLLAR AT CATCH BASIN DETAIL
NOT TO SCALE

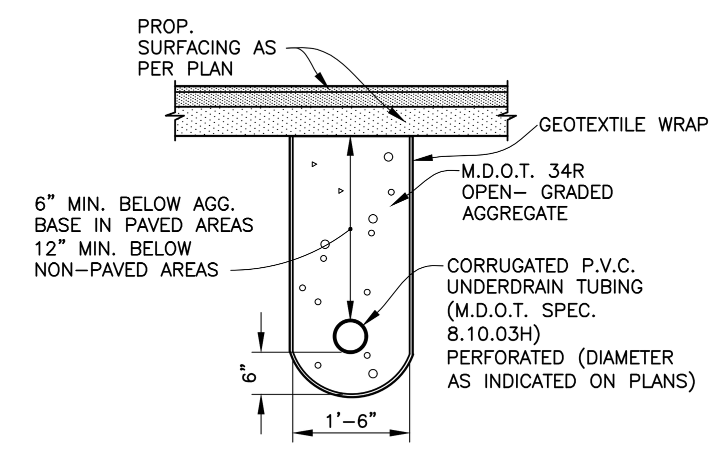

UNDERDRAIN DETAIL
NOT TO SCALE

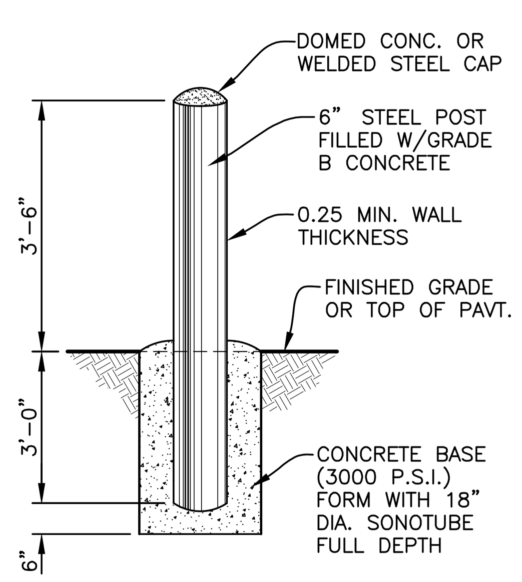

6" STEEL GUARD POST DETAIL
NOT TO SCALE

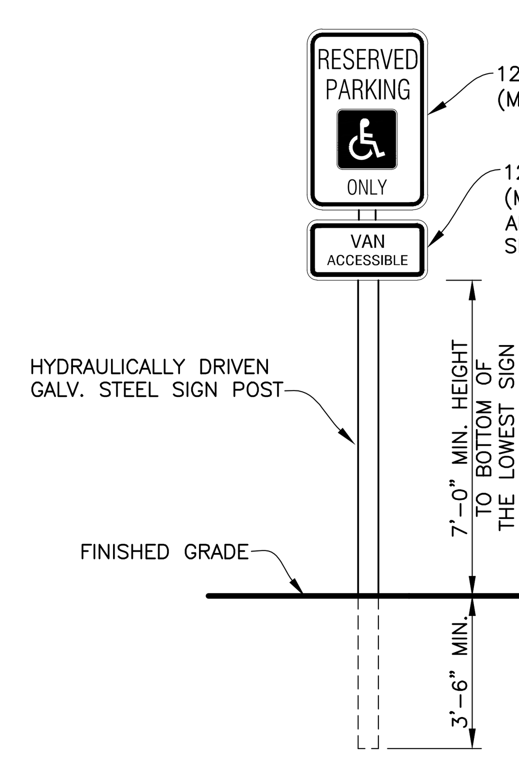

NOTES:

1. ONE REQUIRED AT EACH ACCESSIBLE PARKING SPACE.
2. ALL SIGNS SHALL COMPLY WITH U.S.D.O.T. FEDERAL HIGHWAY ADMINISTRATION'S "MANUAL OF UNIFORM TRAFFIC CONTROL DEVICES", LOCAL CODES AND AS SPECIFIED.
3. MOUNT SIGNS TO POST IN ACCORDANCE W/MANUFACTURER'S INSTRUCTIONS.
4. WHERE ACCESSIBLE SPACES FACE EACH OTHER WITHOUT WALKWAY, THERE SHALL BE ONE POST WITH SIGNS MOUNTED ON BOTH SIDES.

ADA PARKING SIGN DETAIL (NON PAVED AREAS)
NOT TO SCALE

GENERAL CONSTRUCTION NOTES:

1. THE CONTRACTOR AT ALL TIMES SHALL FOLLOW ALL FEDERAL, STATE AND LOCAL SAFETY REQUIREMENTS DURING CONSTRUCTION OF THIS PROJECT. SPECIAL CARE SHALL BE TAKEN DURING ALL TRENCHING OPERATIONS. SHEETING AND BRACING, CRIBBING, ETC., MUST BE INSTALLED AS REQUIRED TO PROVIDE MAXIMUM SAFETY TO THE CONTRACTOR'S WORKERS IN FULL COMPLIANCE WITH OSHA REGULATIONS.
2. ALL CONSTRUCTION SHALL BE CONDUCTED SUCH THAT THERE WILL BE MINIMAL INTERFERENCE WITH STREETS, DRIVES OR WALKS. THE CONTRACTOR IS RESPONSIBLE FOR MAINTENANCE OF TRAFFIC. DO NOT CLOSE OR OBSTRUCT STREETS, DRIVES OR WALKS OR USER FACILITIES WITHOUT PERMISSION FROM THE OWNER'S REPRESENTATIVE.
3. CONTRACTOR SHALL KEEP EXISTING STREETS, ROADS AND DRIVES CLEAR OF DIRT, DEBRIS AND EQUIPMENT.
4. CONTRACTOR SHALL BE RESPONSIBLE FOR SHORING AND FOR DEWATERING TO ACCOMPLISH ALL WORK INDICATED ON PLANS AND TO PERFORM REQUIRED COMPACTION OPERATIONS.
5. REVIEW CONSTRUCTION AND PROVIDE TRAFFIC SEQUENCE AND SCHEDULE AT THE PRECONSTRUCTION MEETING WITH OWNER.
6. THE CONTRACTOR SHALL VERIFY ALL SITE CONDITIONS IN THE FIELD AND CONTACT THE ENGINEER IF THERE ARE ANY QUESTIONS OR CONFLICTS REGARDING THE CONSTRUCTION DOCUMENTS AND/OR FIELD CONDITIONS SO THAT APPROPRIATE REVISIONS CAN BE MADE PRIOR TO CONSTRUCTION. ANY CONFLICT BETWEEN DRAWINGS AND THE SPECIFICATIONS SHALL BE CONFIRMED WITH THE ENGINEER PRIOR TO BIDDING.
7. THE CONTRACTOR SHALL ABIDE BY ALL OSHA, FEDERAL, STATE AND LOCAL REGULATIONS WHEN OPERATING CRANES, BOOMS, HOISTS, ETC. IN CLOSE PROXIMITY TO OVERHEAD ELECTRIC LINES. IF CONTRACTOR MUST OPERATE EQUIPMENT CLOSE TO ELECTRIC LINES, CONTACT THE POWER COMPANY TO MAKE ARRANGEMENTS FOR PROPER SAFEGUARDS.
8. THE OWNER AT ITS DISCRETION RESERVES THE RIGHT TO MODIFY THE DETAILS AND STANDARDS OF CONSTRUCTION FOR ALL PRIVATE FACILITIES FROM THAT INDICATED ON THE APPROVED PLAN, PROVIDED THAT THE ALTERNATE STANDARD COMPLIES WITH LOCAL CODE AND/OR UTILITY COMPANY REQUIREMENTS AND THE GENERAL DESIGN INTENT OF THE PROJECT IS NOT COMPROMISED.
9. CONTRACTOR SHALL MAINTAIN ALL TRAFFIC LANES AND PEDESTRIAN WALKWAYS AT ALL TIMES UNLESS WRITTEN APPROVAL FROM THE STATE DOT, LOCAL MUNICIPALITY, COUNTY, OR OTHER GOVERNING AUTHORITY IS RECEIVED.
10. THE CONTRACTOR SHALL NOTIFY THE ENGINEER SHOULD ANY DISCREPANCY REGARDING THE PROPOSED WORK OR UNFORESEEN CONDITIONS ARISE PRIOR TO PROCEEDING FURTHER WITH THE AFFECTED WORK.
11. THE CONTRACTOR SHALL PROVIDE AS–BUILT RECORDS OF ALL CONSTRUCTION (INCLUDING UNDERGROUND UTILITIES) TO THE ENGINEER AND OWNER FOLLOWING COMPLETION OF CONSTRUCTION ACTIVITIES.
12. ALL PAVING AND AGGREGATE MATERIALS AND WORK COMPLETED SHALL BE IN STRICT ACCORDANCE WITH THE STATE DOT SPECIFICATIONS AND STANDARD DETAILS UNLESS OTHERWISE SPECIFIED.
13. THE CONTRACTOR SHALL BE RESPONSIBLE FOR VERIFYING ALL DIMENSIONS FOR BUILDING, WALLS, CONCRETE SLABS, AND UTILITY SERVICE POINT CONNECTIONS AND NOTIFYING THE OWNER AND ENGINEER OF ANY CONFLICTS OR DISCREPANCIES PRIOR TO CONSTRUCTION.
14. THE CONTRACTOR SHALL SUBMIT SHOP DRAWINGS OF ALL PRODUCTS AND MATERIALS TO THE OWNER AND LOCAL UTILITY COMPANIES AS REQUIRED FOR REVIEW AND APPROVAL PRIOR TO FABRICATION OR DELIVERY TO THE SITE. ALLOW A MINIMUM OF 7 DAYS FOR REVIEW.
15. THE CONTRACTOR SHALL REFERENCE ARCHITECTURAL PLANS FOR EXACT DIMENSIONS AND CONSTRUCTION DETAILS OF BUILDING, CANOPY, AND UTILITY CONNECTIONS.
16. TRAFFIC CONTROL SIGNAGE SHALL CONFORM TO THE STATE DOT STANDARD DETAIL SHEETS AND THE MANUAL OF UNIFORM TRAFFIC CONTROL DEVICES. SIGNS SHALL BE INSTALLED PLUMB.
17. FIRE LANES SHALL BE ESTABLISHED AND PROPERLY DESIGNATED IN ACCORDANCE WITH THE LOCAL MUNICIPALITY AND LOCAL FIRE DEPARTMENT REQUIREMENTS.
18. THE CONTRACTOR SHALL REMOVE CONFLICTING PAVEMENT MARKINGS IN A METHOD APPROVED BY THE STATE DOT.
19. AGGREGATES AND BITUMINOUS PAVEMENT MATERIAL AND INSTALLATION SPECIFICATIONS SHALL BE IN ACCORDANCE WITH STATE DOT SPECS. THE CONTRACTOR SHALL SUBMIT AGGREGATE SIEVE ANALYSIS AND A JOB–MIX FORMULA FOR THE BITUMINOUS PAVEMENT TO THE CONSTRUCTION MANAGER FOR REVIEW AND APPROVAL AT LEAST 14 DAYS PRIOR TO THE PLACEMENT OF BITUMINOUS PAVEMENTS.
20. ALTERNATIVE METHODS AND PRODUCTS OTHER THAN THOSE SPECIFIED MAY BE USED IF REVIEWED AND APPROVED BY THE OWNER, ENGINEER, AND APPROPRIATE REGULATORY AGENCIES PRIOR TO INSTALLATION.
21. CONTRACTOR SHALL BE RESPONSIBLE FOR ALL CONSTRUCTION LAYOUTS AND SURVEYS REQUIRED TO PERFORM CONSTRUCTION. CADD FILE INFORMATION IS PROVIDED FOR REFERENCE ONLY.
22. PROVIDE ADEQUATE BARRICADES AT DRIVES, ENTRANCES, EXCAVATIONS AND OTHER OPENINGS TO KEEP OUT UNAUTHORIZED PERSONS AND FOR PUBLIC SAFETY AND TRAFFIC CONTROL. SAFETY PROVISIONS OF APPLICABLE LAWS SHALL BE OBSERVED AT ALL TIMES. BARRICADES LEFT IN PLACE AT NIGHT SHALL BE LIGHTED.
23. NO EQUIPMENT OR MATERIAL STORAGE IS PERMITTED WITHIN THE ROAD RIGHT–OF–WAY.
24. CONTRACTOR'S MANNER AND METHOD OF INGRESS AND EGRESS WITH RESPECT TO THE PROJECT AREA SHALL IN NO WAY PROHIBIT OR DISTURB NORMAL PEDESTRIAN OR VEHICULAR TRAFFIC IN THE VICINITY AND IS SUBJECT TO REGULATION AND WRITTEN APPROVAL OF APPROPRIATE GOVERNING AGENCIES.
25. CONSTRUCTION SHALL BE IN ACCORDANCE WITH A.D.A. REGULATIONS AS APPLICABLE.

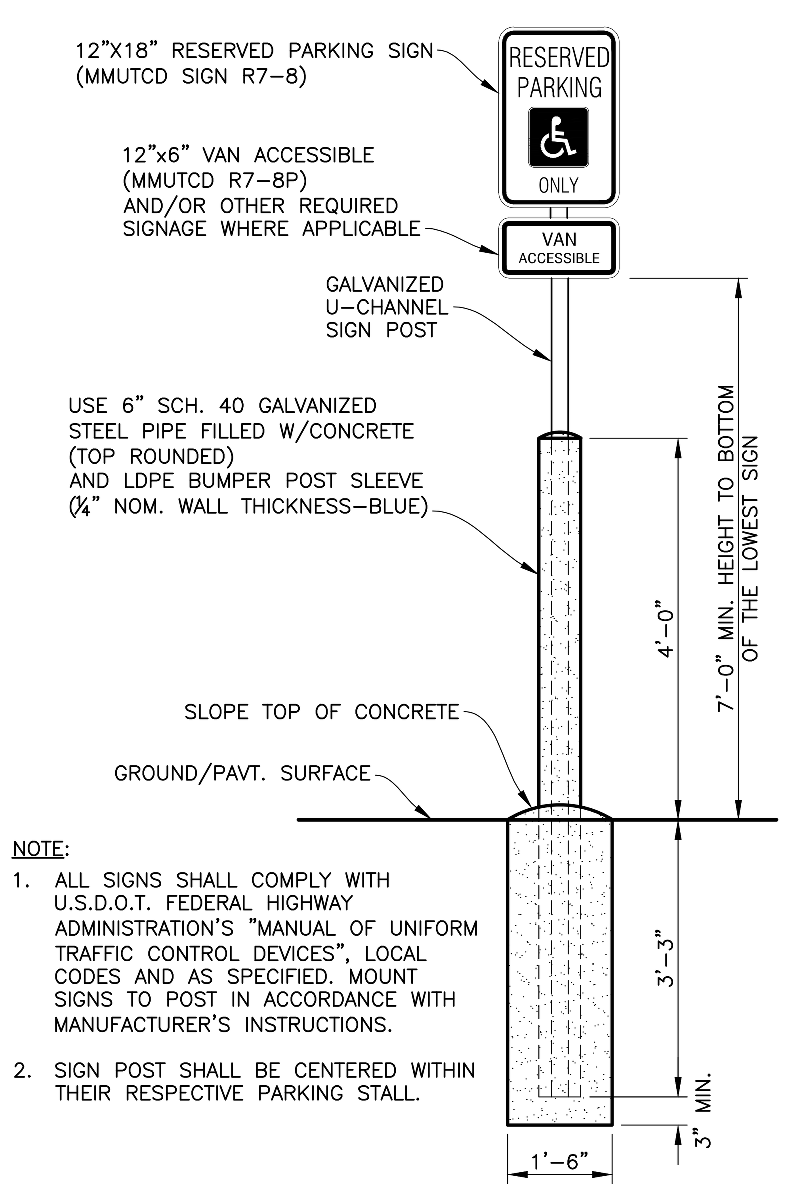

NOTE:

1. ALL SIGNS SHALL COMPLY WITH U.S.D.O.T. FEDERAL HIGHWAY ADMINISTRATION'S "MANUAL OF UNIFORM TRAFFIC CONTROL DEVICES", LOCAL CODES AND AS SPECIFIED. MOUNT SIGNS TO POST IN ACCORDANCE WITH MANUFACTURER'S INSTRUCTIONS.
2. SIGN POST SHALL BE CENTERED WITHIN THEIR RESPECTIVE PARKING STALL.

PARKING LOT ADA SIGN DETAIL
NOT TO SCALE

WAKELY ASSOCIATES, INC.
ARCHITECTS

30500 VAN DYKE AVENUE
SUITE M-7
WARREN, MICHIGAN 48093
PH: 586.573.4100
FX: 586.573.0822
www.WakelyAIA.com

ANDERSON, ECKSTEIN AND WESTRICK INC.
51301 Schoenherr Road,
Shelby Township, Michigan 48315
Phone 586-726-1234
Fax 586-726-8780
AEW NO. 0577-0101

FARMINGTON PUBLIC SCHOOLS
2017 RENOVATIONS
BEECHVIEW ELEMENTARY RENOVATIONS

MISCELLANEOUS PROJECT DETAILS

PRELIMINARY	☐
DESIGN DEVELOPMENT	■
CONSTRUCTION	☐
FINAL RECORD	☐

DRAWN BY KJP
CHECKED BY JS

REVISIONS

11/22/17	PRELIMINARY BID
12/06/17	SCOPING DOCS
12/13/17	BID SETS

DATE: OCTOBER 25, 2017

SHEET NO.
C5.0

JOB NO.

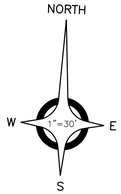

LOCATION MAP

NOT TO SCALE

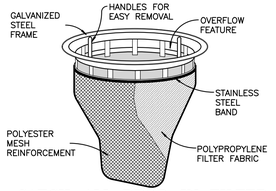

CATCH-ALL DROP-IN FILTER

NOT TO SCALE

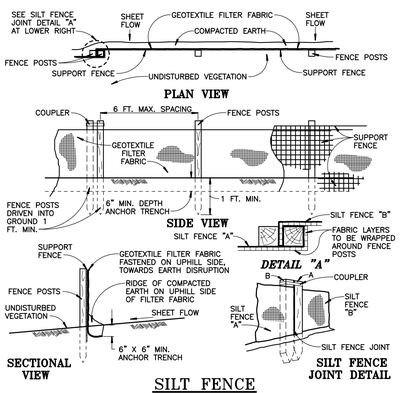

SILT FENCE

NOT TO SCALE

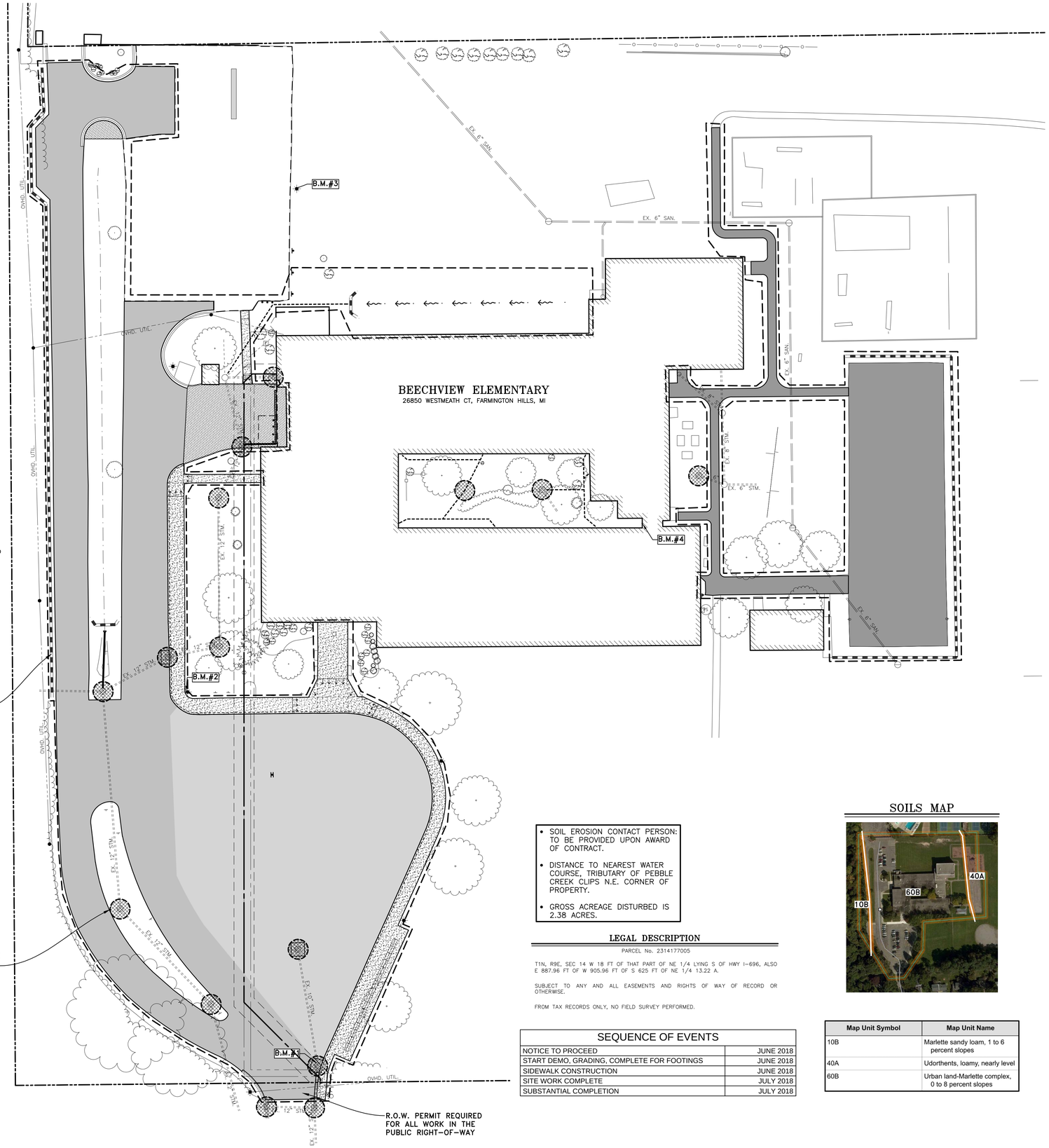

BENCH MARKS (NAVD88 DATUM)

BENCH MARK NO. 1
"+" ON N. RIM STORM MH IN DRIVE @ S.E. COR. PKG LOT.
ELEVATION: 788.47

BENCH MARK NO. 2
"+" ON LIGHT POLE BASE @ S.W. COR. OF SCHOOL BLDG.
ELEVATION: 792.82

BENCH MARK NO. 3
"+" ON LIGHT POLE BASE @ E. END OF REAR PKG. LOT.
ELEVATION: 796.96

BENCH MARK NO. 4
PAINTED "+" ON ℄ CONC. DOORWELL @ E. END OF COURTYARD.
ELEVATION: 792.51

UTILITY INFORMATION, AS SHOWN, INDICATES APPROXIMATE LOCATIONS AND TYPES OF EXISTING FACILITIES ONLY, AS DISCLOSED BY RECORDS PROVIDED TO THIS FIRM FROM THE VARIOUS UTILITY COMPANIES. NO GUARANTEE IS GIVEN OR IMPLIED AS TO THE COMPLETENESS OR ACCURACY THEREOF.

PRIOR TO CONSTRUCTION, ALL LOCATIONS AND DEPTHS OF EXISTING OVERHEAD AND UNDERGROUND UTILITIES (IN CONFLICT WITH THE CONSTRUCTION OF THESE PROPOSED IMPROVEMENTS) SHALL BE VERIFIED IN THE FIELD. DURING THE CONSTRUCTION, THE CONTRACTOR SHALL PROTECT AND SUPPORT ALL UTILITIES THAT ARE ENCOUNTERED. (ALL COSTS FOR UTILITY LOCATION VERIFICATION, SUPPORT AND PROTECTION SHALL BE INCLUDED IN THE PROPOSED PAY ITEM CONFLICTING WITH THAT UTILITY).

DURING CONSTRUCTION, THE CONTRACTOR SHALL USE EXTREME CAUTION WHEN OPERATING NEAR ANY AND ALL OVERHEAD AND / OR BURIED UTILITIES.

3 WORKING DAYS BEFORE YOU DIG

CALL MISS DIG 811 TOLL FREE

M:\0577\0577-0101\DWG\CIVIL\01_ENGPLANS.DWG C6.0_SESC---12/12/2017 12:00:28 PM

- SOIL EROSION CONTACT PERSON: TO BE PROVIDED UPON AWARD OF CONTRACT.
- DISTANCE TO NEAREST WATER COURSE, TRIBUTARY OF PEBBLE CREEK CLIPS N.E. CORNER OF PROPERTY.
- GROSS ACREAGE DISTURBED IS 2.38 ACRES.

LEGAL DESCRIPTION

PARCEL No. 2314177005

T1N, R9E, SEC 14 W 18 FT OF THAT PART OF NE 1/4 LYING S OF HWY I-696, ALSO E 887.96 FT OF W 905.96 FT OF S 625 FT OF NE 1/4 13.22 A.

SUBJECT TO ANY AND ALL EASEMENTS AND RIGHTS OF WAY OF RECORD OR OTHERWISE.

FROM TAX RECORDS ONLY, NO FIELD SURVEY PERFORMED.

SEQUENCE OF EVENTS

NOTICE TO PROCEED	JUNE 2018
START DEMO, GRADING, COMPLETE FOR FOOTINGS	JUNE 2018
SIDEWALK CONSTRUCTION	JUNE 2018
SITE WORK COMPLETE	JULY 2018
SUBSTANTIAL COMPLETION	JULY 2018

SOILS MAP

Map Unit Symbol	Map Unit Name
10B	Marlette sandy loam, 1 to 6 percent slopes
40A	Udorthents, loamy, nearly level
60B	Urban land-Marlette complex, 0 to 8 percent slopes

SOIL EROSION AND SEDIMENTATION CONTROL NOTES AND MAINTENANCE NOTES

1. THIS PROJECT SHALL BE CONSTRUCTED IN COMPLIANCE WITH PART 91 OF ACT 451 OF 1994, AS AMENDED, THE SOIL EROSION AND SEDIMENTATION CONTROL ACT AND THE OAKLAND COUNTY SOIL EROSION AND SEDIMENTATION CONTROL ORDINANCE.
2. ALL EROSION AND SEDIMENTATION CONTROL WORK SHALL CONFORM TO THE STANDARDS AND SPECIFICATIONS OF OAKLAND COUNTY WATER RESOURCES COMMISSION.
3. EROSION AND ANY SEDIMENTATION FROM WORK ON THIS SITE SHALL BE CONTAINED ON THE SITE AND NOT ALLOWED TO COLLECT ON ANY OFF SITE AREAS OR IN WATERWAYS. WATERWAYS INCLUDE BOTH NATURAL AND MAN MADE OPEN DITCHES, STREAMS, STORM DRAINS, LAKES, AND PONDS.
4. STAGING THE WORK WILL BE DONE BY THE CONTRACTOR AS DIRECTED IN THESE PLANS AND AS REQUIRED TO ENSURE PROGRESSIVE STABILIZATION OF DISTURBED EARTH CHANGE.
5. THE CONTRACTOR SHALL BE RESPONSIBLE FOR INSTALLATION AND MAINTENANCE OF SOIL EROSION AND SEDIMENTATION CONTROL DEVICES.
6. THE CONTRACTOR SHALL IMPLEMENT AND MAINTAIN THE SOIL EROSION CONTROL MEASURES AS SHOWN ON THE PLANS BEFORE AND AT ALL TIMES DURING CONSTRUCTION ON THIS PROJECT. ANY MODIFICATIONS OR ADDITIONS TO SOIL EROSION CONTROL MEASURES DUE TO CONSTRUCTION OR CHANGED CONDITIONS SHALL BE COMPLIED WITH AS REQUIRED OR DIRECTED BY OAKLAND COUNTY WATER RESOURCES COMMISSION.
7. IF ANY OF THE SESC MEASURES ON THE SITE ARE DEEMED INADEQUATE OR INEFFECTIVE, THE OAKLAND COUNTY WATER RESOURCES COMMISSION HAS THE RIGHT TO REQUIRE ADDITIONAL SESC MEASURES AT THE EXPENSE OF THE LANDOWNER.
8. INSTALL CRUSHED CONCRETE ACCESS DRIVE PLACED ON GEOTEXTILE FABRIC AS INDICATED ON THE PLAN. THE ACCESS DRIVE MUST BE A MINIMUM OF 12' X 50' X 8".
   A. NEW LAYERS OF CRUSHED CONCRETE WILL BE ADDED AS OLD LAYERS BECOME COMPACTED.
9. INSTALL SILT FENCE AS INDICATED ON THE PLAN AND AT ADDITIONAL AREAS AS NECESSARY.
   A. SILT FENCE SHALL BE INSTALLED PER DETAIL.
   B. BUILD UP OF SEDIMENT SHALL BE REMOVED WHEN SEDIMENT ACCUMULATES TO 1/3 TO 1/2 OF THE HEIGHT OF THE SILT FENCE.
   C. IF SILT FENCE FABRIC DECOMPOSES OR BECOMES INEFFECTIVE PRIOR TO THE END OF EXPECTED USABLE LIFE AND THE BARRIER IS STILL REQUIRED, THE SILT FENCE SHALL BE REPLACED PROMPTLY.
   D. SILT FENCE SHALL BE INSPECTED WEEKLY UNDER NORMAL CONDITIONS, WITHIN 24 HOURS OF RAINFALL AND DAILY DURING A PROLONGED RAIN EVENT. REQUIRED MAINTENANCE SHALL BE PROVIDED PROMPTLY.
10. INSTALL INLET FILTER ON ALL PAVEMENT CATCH BASINS PER DETAIL.
   A. INLET FILTERS SHALL BE INSPECTED WEEKLY UNDER NORMAL CONDITIONS, WITHIN 24 HOURS OF A RAINFALL, AND DAILY DURING A PROLONGED RAIN EVENT.
   B. BUILDUP OF SEDIMENT AND DEBRIS SHALL BE REMOVED PROMPTLY.
   C. IF FABRIC DECOMPOSES OR BECOMES INEFFECTIVE PRIOR TO THE END OF EXPECTED USABLE LIFE AND THE BARRIER IS STILL REQUIRED, THE FABRIC SHALL BE REPLACED PROMPTLY.
11. INSTALL SILT FENCE ON ALL YARD CATCH BASINS PER DETAIL. SEED OR SOD THE AREA BETWEEN THE SILT FENCE AND THE INLET.
   A. SILT FENCE SHALL BE INSPECTED WEEKLY UNDER NORMAL CONDITIONS, WITHIN 24 HOURS OF RAINFALL, AND DURING A PROLONGED RAIN EVENT.
   B. BUILD UP OF SEDIMENT SHALL BE REMOVED WHEN SEDIMENT ACCUMULATES TO 1/3 TO 1/2 OF THE HEIGHT OF THE SILT FENCE.
   C. IF FABRIC DECOMPOSES OR BECOMES INEFFECTIVE PRIOR TO THE END OF EXPECTED USABLE LIFE AND THE BARRIER IS STILL REQUIRED, THE SILT FENCE SHALL BE REPLACED PROMPTLY.
12. INLET SEDIMENT TRAPS AND ALL DITCH SEDIMENT TRAPS SHALL BE INSPECTED DAILY. THE SEDIMENT PITS SHALL BE CLEANED OUT WHEN HALF FULL, OR AS DIRECTED BY OAKLAND COUNTY WATER RESOURCES COMMISSION.
13. ALL STOCKPILED SOILS SHALL BE MAINTAINED IN SUCH A WAY AS TO PREVENT EROSION FROM LEAVING THE SITE. IF THE STOCKPILE WILL BE ON SITE FOR MORE THAN 30 DAYS, THE STOCKPILE MUST BE SEEDED. SILT FENCE MUST BE INSTALLED AROUND THE PERIMETER OF THE STOCKPILE.
14. IMMEDIATELY AFTER SEEDING, MULCH ALL SEEDED AREAS WITH UNWEATHERED SMALL GRAIN STRAW, SPREAD UNIFORMLY AT THE RATE OF 1-1/2 TO 2 TONS PER ACRE OR 100 POUNDS (2-3 BALES) PER 1000 SQUARE FEET. THIS MULCH SHOULD BE ANCHORED WITH DISC TYPE MULCH ANCHORING TOOL OR OTHER MEANS AS APPROVED BY OAKLAND COUNTY WATER RESOURCES COMMISSION. MULCH MATTING MAY BE USED IN LIEU OF LOOSE MULCH.
15. IF ANY DEWATERING IS NEEDED, IT SHALL BE DISCHARGED THROUGH A FILTER BAG OVER A WELL VEGETATED AREA. THE PUMP MUST DISCHARGE AT A NON-EROSIVE VELOCITY. IF NECESSARY, AN APPROVED ENERGY DISSIPATER MAY BE USED.
16. ALL DIRT TRACKED ONTO ANY ROADWAY SHALL BE REMOVED IMMEDIATELY.
17. STREETS AND OR PARKING AREAS WILL BE SCRAPED ON A DAILY BASIS AND SWEPT AT A MINIMUM OF ONCE PER WEEK BY THE CONTRACTOR.
18. DURING DRY PERIODS, ALL DISTURBED AREAS SHALL BE WATERED FOR DUST CONTROL.
19. PERMANENT SOIL EROSION CONTROL MEASURES FOR ALL SLOPES, CHANNELS, DITCHES, OR ANY DISTURBED LAND AREA SHALL BE COMPLETED WITHIN 5 CALENDAR DAYS AFTER FINAL GRADING OR THE FINAL EARTH CHANGE HAS BEEN COMPLETED. WHEN IT IS NOT POSSIBLE TO PERMANENTLY STABILIZE A DISTURBED AREA AFTER EARTH CHANGE HAS BEEN COMPLETED OR WHERE SIGNIFICANT EARTH CHANGE HAS BEEN COMPLETED OR WHERE SIGNIFICANT EARTH CHANGES ACTIVITY CEASES, TEMPORARY SOIL EROSION CONTROL MEASURES SHALL BE IMPLEMENTED IMMEDIATELY. ALL TEMPORARY SOIL EROSION CONTROL SHALL BE MAINTAINED UNTIL PERMANENT SOIL EROSION CONTROL MEASURES ARE IMPLEMENTED. ALL PERMANENT SOIL EROSION CONTROL MEASURES WILL BE IMPLEMENTED AND ESTABLISHED BEFORE A CERTIFICATE OF COMPLIANCE IS ISSUED.
20. FINAL GRADE, ESTABLISH VEGETATION, AND OR LANDSCAPE ALL DISTURBED AREAS NOT BUILT OR PAVED UPON.
21. REMOVE ALL TEMPORARY SOIL EROSION DEVICES AFTER PERMANENT STABILIZATION IS ESTABLISHED.

NAME OF & DISTANCE TO NEAREST WATERCOURSE:
TRIBUTARY OF PEBBLE CREEK CLIPS N.E. CORNER OF PROPERTY

NAME(S) & PHONE NUMBER(S) FOR PERSON(S) RESPONSIBLE FOR THE MAINTENANCE OF ALL TEMPORARY & PERMANENT SOIL EROSION CONTROL MEASURES:

_____

APPROXIMATE START DATE JUNE 2018.

APPROXIMATE COMPLETION DATE JULY 2018.

TOTAL ACRES DISTURBED = 2.38 ACRES

I UNDERSTAND MY RESPONSIBILITY OUTLINED UNDER THESE GUIDELINES.

_____ _____

CONTRACTOR'S SIGNATURE DATE

FAILURE TO COMPLY WITH THE SESC PLAN AND THESE GUIDELINES MAY RESULT IN ENFORCEMENT ACTION AGAINST THE CONTRACTOR.

NOTE:
NO DEWATERING OR ON SITE STOCKPILING OF MATERIAL IS ANTICIPATED ON THIS PROJECT

NOTE:
RESTORE ALL DISTURBED AREAS WITH 3" MIN. TOPSOIL, SEED, FERTILIZER & MULCH.

LEGEND

- EXIST. STORM CATCH BASIN (FIELD)
- EXIST. STORM CATCH BASIN (PAV'T.)
- EXIST. STORM MAN HOLE
- STORM MAN HOLE
- STORM CATCH BASIN (FIELD)
- STORM CATCH BASIN (PAV'T.)
- INLET FILTER
- SILT FENCE
- LIMITS OF DISTURBANCE

WAKELY ASSOCIATES, INC.
ARCHITECTS

30500 VAN DYKE AVENUE
SUITE M-7
WARREN, MICHIGAN 48093
PH: 586.573.4100
FX: 586.573.0822
www.WakelyAIA.com

ANDERSON, ECKSTEIN AND WESTRICK INC.
51901 Schoenherr Road,
Shelby Township, Michigan 48315
Phone: 586-726-1234
Fax: 586-726-8790
AEW NO. 0577-0101

FARMINGTON PUBLIC SCHOOLS
2017 RENOVATIONS
BEECHVIEW ELEMENTARY RENOVATIONS

SOIL EROSION & SEDIMENTATION CONTROL PLAN

PRELIMINARY ☐
DESIGN DEVELOPMENT ■
CONSTRUCTION ☐
FINAL RECORD ☐

DRAWN BY KJP
CHECKED BY JS

REVISIONS
11/22/17 PRELIMINARY BID
12/06/17 SCOPING DOCS.
12/13/17 BID SETS

DATE: OCTOBER 25, 2017

SHEET NO.
C6.0

JOB NO.

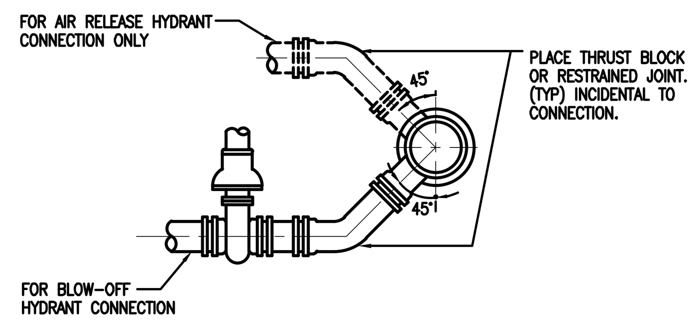

AIR RELEASE AND BLOW-OFF CONNECTION

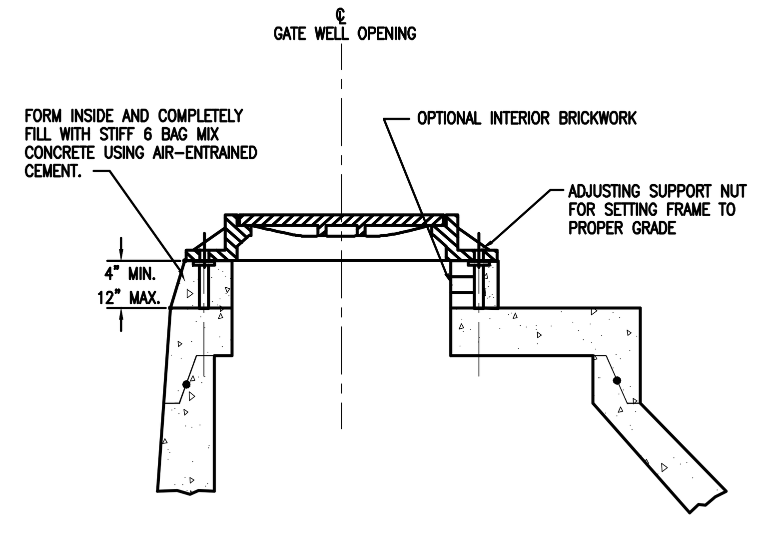

GATE WELL TOPS WITHIN PAVEMENT AREAS

NOTE:
ALL GATE WELL PRECAST SECTIONS SHALL BE PREMIUM JOINT.

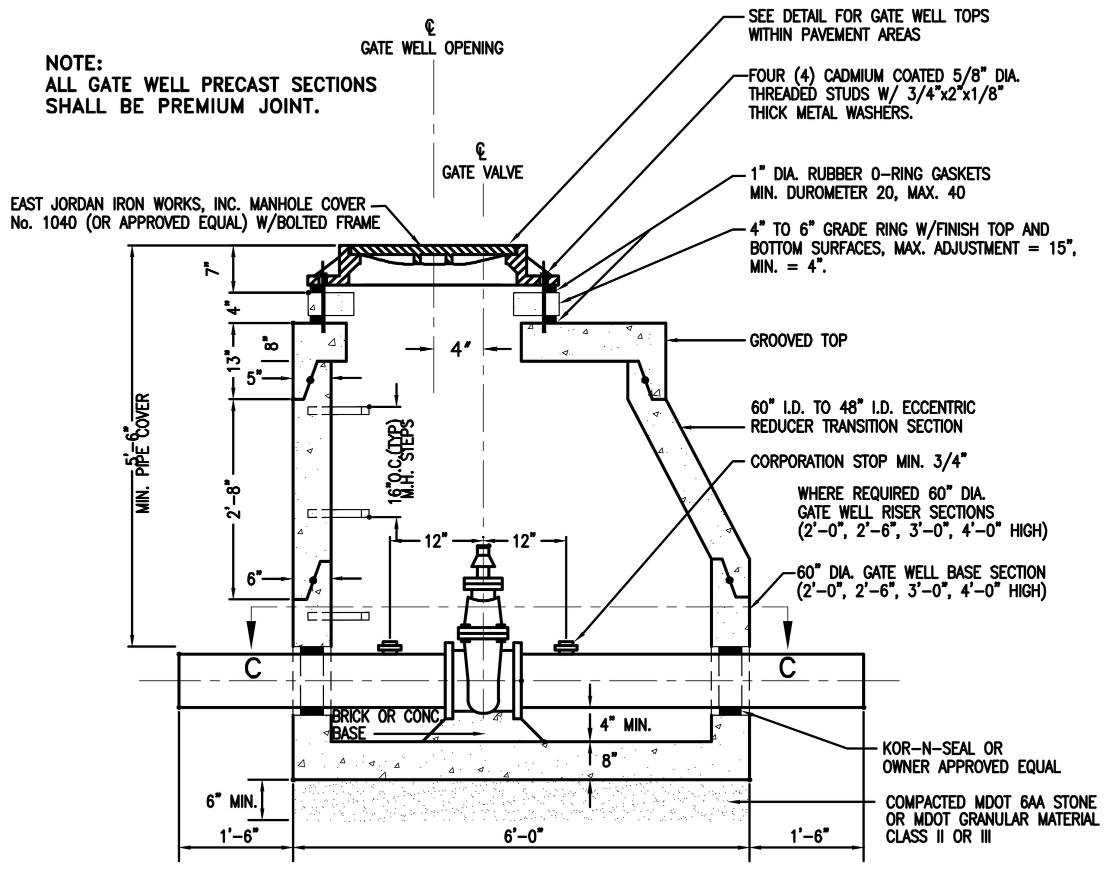

6", 8" AND 12" GATE WELL
(A-A)

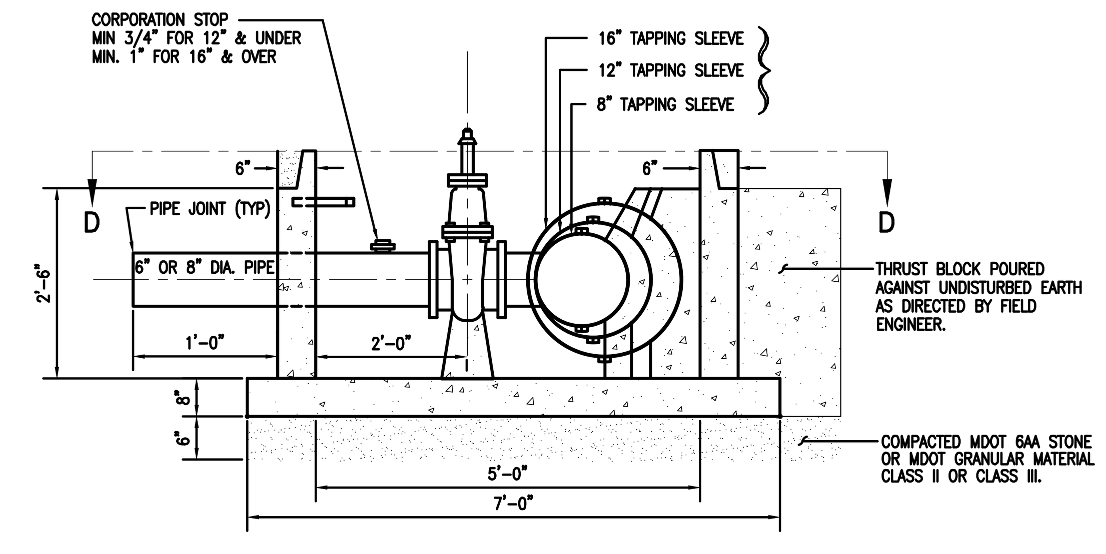

16"x8", 16"x6", 12"x8", 12"x6", 8"x8"*, 8"x6", 6"x6"*
TAPPING SLEEVE, VALVE & WELL
(B-B)

NOTES:
TAPPING SLEEVE VALVE AND WELL FOR WATER MAIN LARGER THAN 16" DIAMETER SHALL BE PER DWSD STANDARDS, AND MUST BE SHOWN ON THE PLANS.

*USE OF 6"x6" OR 8"x8" TAPPING SLEEVE VALVE AND WELL MUST BE APPROVED BY Farmington D.P.W.

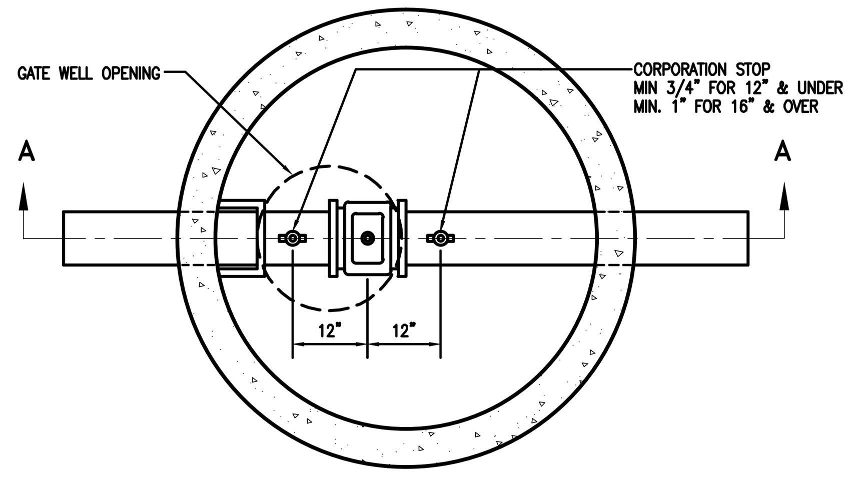

6", 8" AND 12" GATE WELL TYPICAL
(PLAN VIEW, C-C)

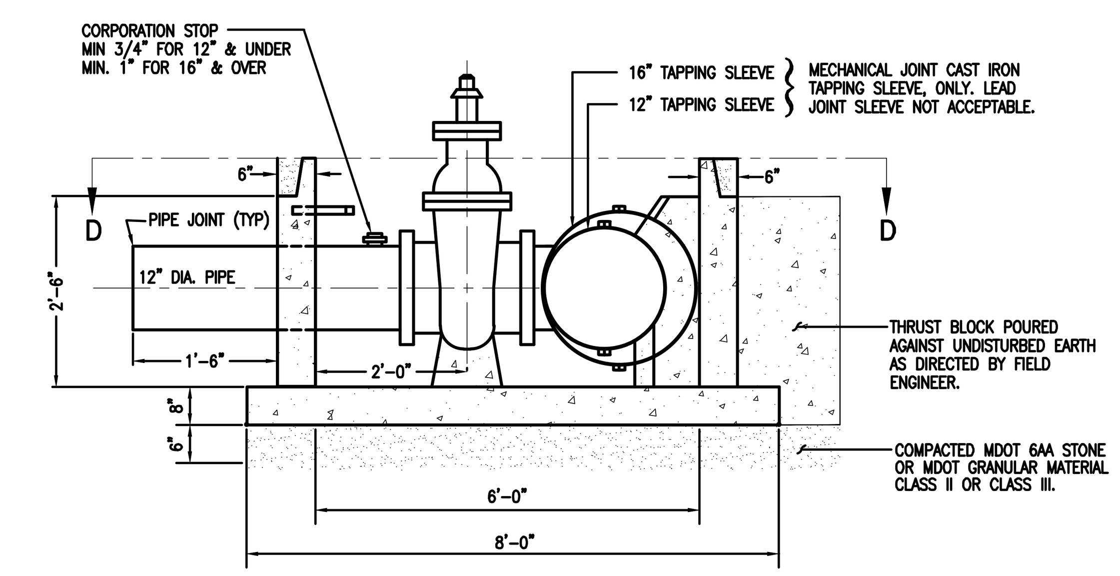

16"x12", 12"x12"* TAPPING SLEEVE, VALVE & WELL
(B-B)

*NOTE:
USE OF 12"x12" TAPPING SLEEVE VALVE AND WELL MUST BE APPROVED BY Farmington D.P.W.

NOTE:
ALL GATE WELL PRECAST SECTIONS SHALL BE PREMIUM JOINT.

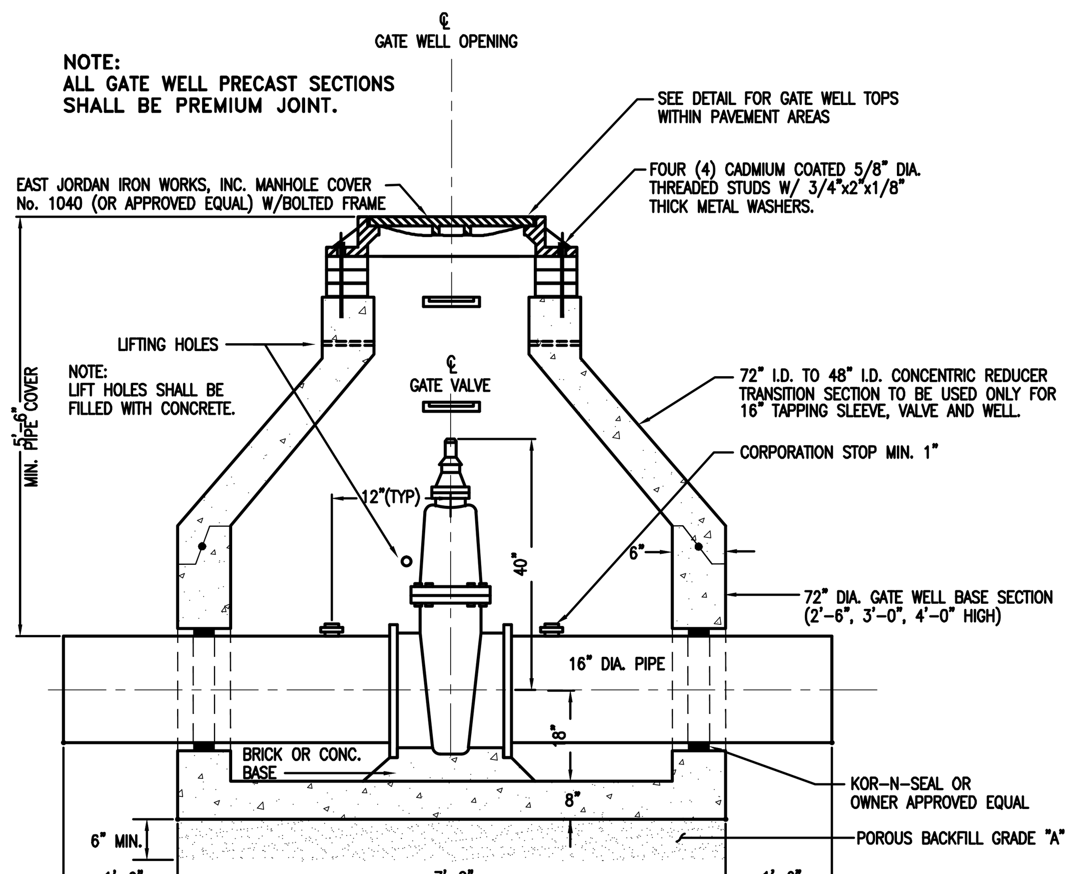

16" GATE WELL

NOTE:
16" VALVE WITH REDUCERS SHALL BE USED FOR WATER MAIN LARGER THAN 16" DIAMETER.

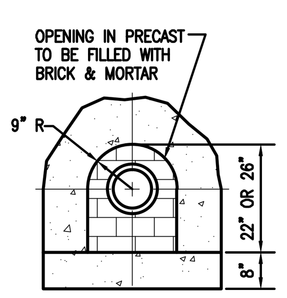

PRECAST OPENING

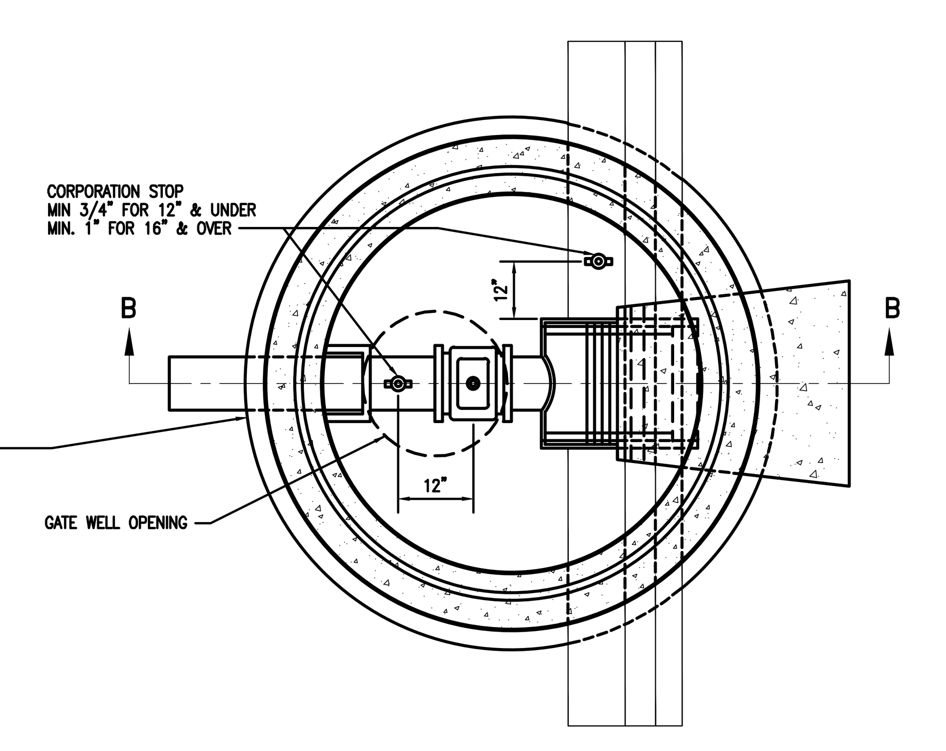

TAPPING SLEEVE
VALVE & WELL TYPICAL
(PLAN VIEW, D-D)

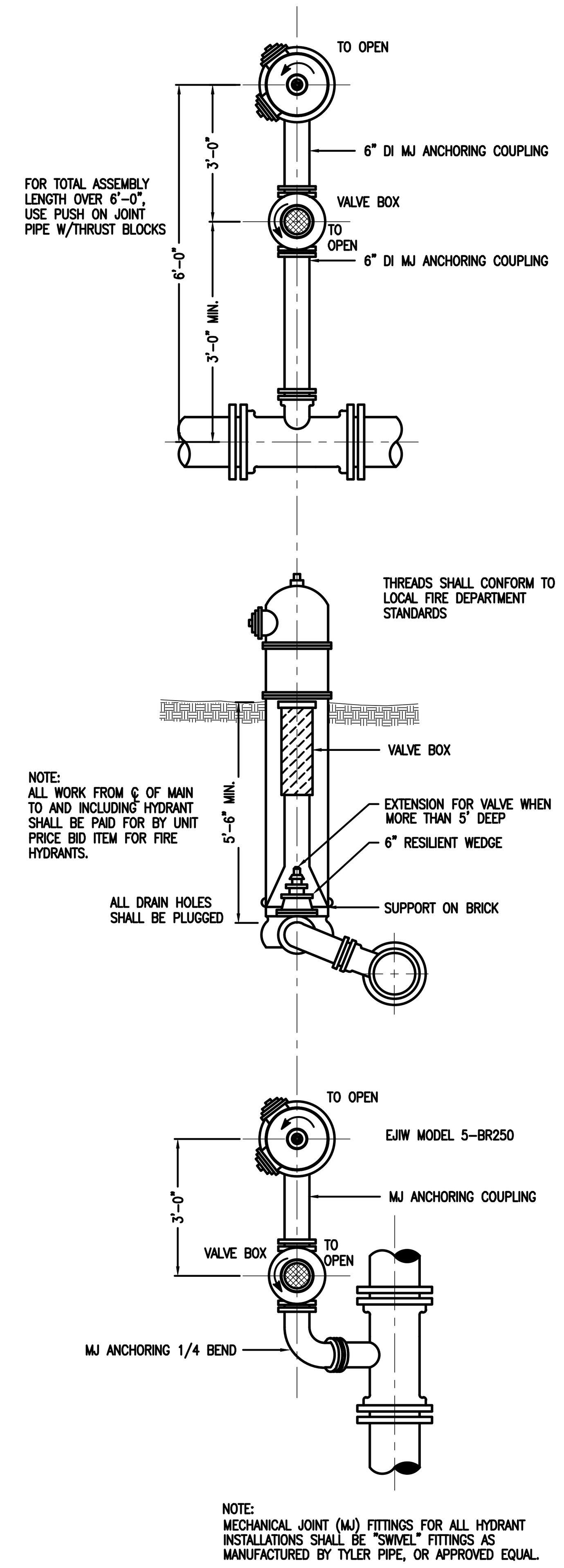

DETAIL OF HYDRANT SETTINGS

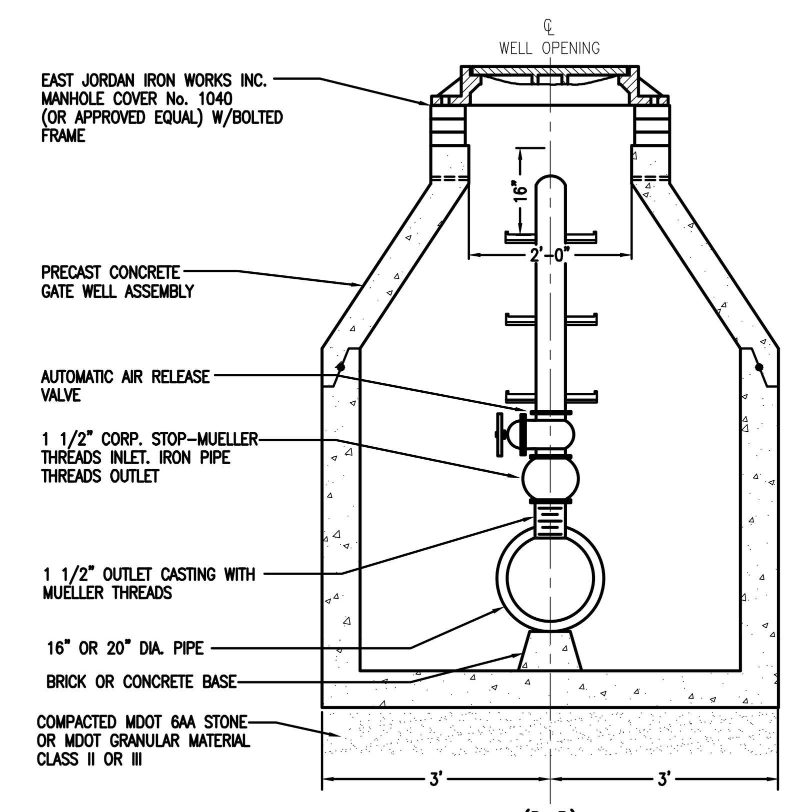

(D-D)

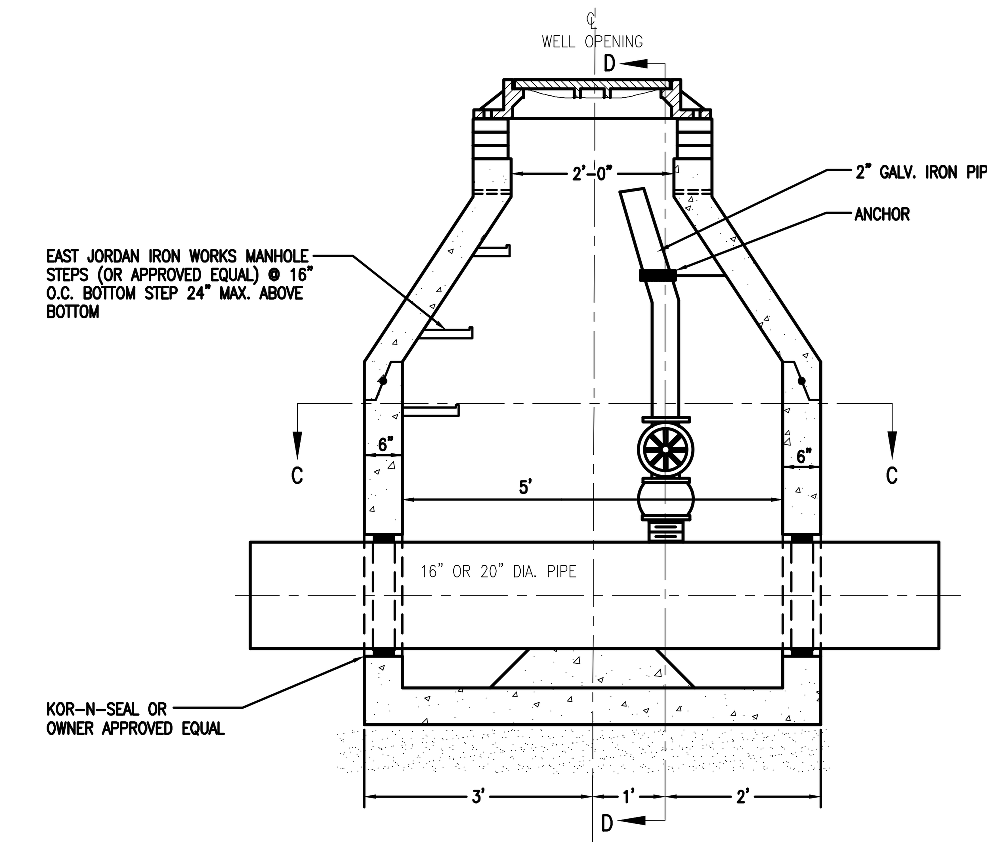

(A-A)

NOTES:
1. ALL AIR RELEASE WELLS SHALL BE PRECAST STRUCTURES.
2. ALL AIR RELEASE VALVES SHALL BE AUTOMATIC PER CITY OF FARMINGTON DPS REQUIREMENTS.

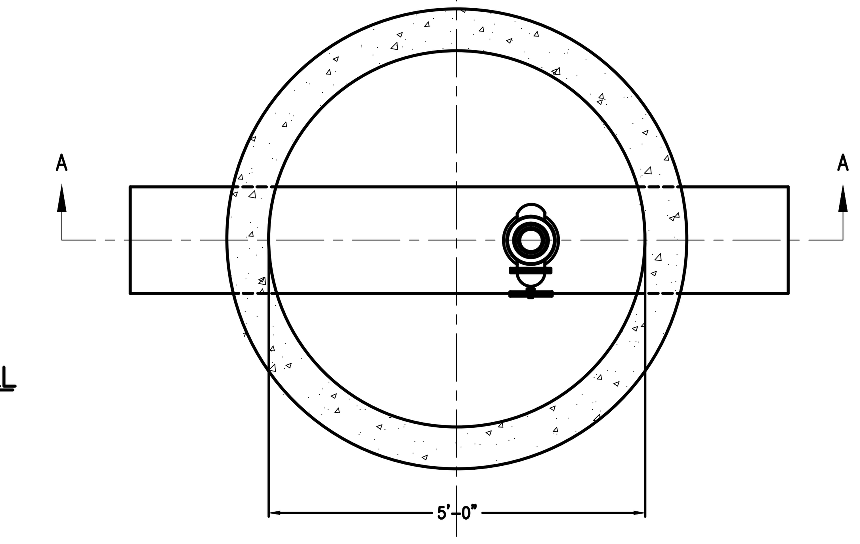

(PLAN VIEW, C-C)

STANDARD AIR RELEASE VALVE & WELL
FOR 16" & 20" WATER MAIN
(FOR PLACEMENT AT HIGH POINTS IN WATER MAIN SYSTEM AS DIRECTED BY THE CITY ENGINEER)

WATER MAIN NOTES

1. All construction procedures and materials used on all water main projects shall conform to Detroit Water and Sewerage Department and The City of Farmington current Standards and Specifications.

2. All hydrants shall be E.J.I.W. #5BR-250 WaterMaster and shall conform to AWWA specification C502 as ammended and shall have a minimum 5 1/4" valve opening which closes with the water pressure. Hydrants shall meet all test requirements and be listed by Underwriters Laboratories, Inc, and meet the requirments of Factory Mutual. They must also be in accordance with the East Jordan Iron Works 5BR-250 Fire Hydrant Specifications- Farmington. Hydrants shall be traffic style with breakable flange and coupling. Hydrants shall have a swivel flange to allow bonnet to be turned 360 degrees without removing the bonnet, and barrel flanges shall be integrally cast with the barrel. Inlet shoe shall have a bronze valve seat, which can be removed without digging. Inlet connection shall be 6" mechanical joint, ASA-A21-11. Stem threads shall be sealed with double "O" rings and shall be permanently lubricated with all weather grease. Hose connections: Two (2) 2 1/2" hose nozzles, and One (1) 4 1/2" pumper nozzle, with National Standard threads. Operating Nut: (1) 1½" P-F pentagon, open left. All hydrants shall have a Carroll drain. Hydrants shall be painted red above the ground and black below, with a finish coat of Glamortex 501 enamel or approved equal. Nozzle caps shall be painted red.

3. All water mains shall be ductile iron, as per the following specification Ductile iron pipe shall be ANSI 1-A21.51 (AWWA-C151) standard wall thickness, cement lined with bituminous seal coat Class 54 for sizes 6" through 20" and Class 55 for 24" pipe.

4. Gate Valves shall be iron body, fully bronze mounted, E.J.I.W. resilient wedge, non-rising stem, opening counter clockwise conforming to City of Detroit Water and Sewerage Department specifications. All gate valves with operating nuts at a distance greater than 5' below ground surface shall be provided with an extension stem. The length of the extension shall be such that it will be within 5' of ground surface when an extension stem is used. It shall be held in place by two extension stem guide assemblies. Each assembly shall be comprised of a "J" bracket and "L" bracket supplied by E.J.I.W. The stem guides shall be located opposite from each other, and shall be suitably fastened to the wall of the gate well. In addition, a "stop" shall be welded to the extension stem in a location that will prevent the extension stem from slipping off the operating nut. Details of extension stem and method of installation shall be approved by the engineer prior to installation. All precast concrete gate well sections shall be manufactured to conform with ASTM C478, standard specifications for precast reinforced concrete manhole sections, except wall thickness, shall be shown on these details. All joints for precast concrete gate well sections shall be "modified grooved tongue" with gasket manufactured to conform with ASTM C443, standard specification for joints for circular concrete sewer and culvert pipe rubber gaskets. All gate well covers shall be E.J.I.W. #1040 with bolted and have words "Water Dept" in raised letters on the frame cover, or approved equal.

5. Tapping sleeve shall be mechanical joint with DWS Mechanical Joint Tapping Gate Valve. Lead joint sleeves shall not be used.

6. Water mains shall be laid at least 10 feet horizontally from any existing or proposed gravity sewer, septic tank, or subsoil treatment system. The distance shall be measured edge to edge. In cases where it is not pratical to maintain a 10 foot separation, the reviewing authority may allow deviation on a case-by-case basis, if supported by data from the design engineer.

7. No installation of water main shall be attempted without City's inspector being present. Unless otherwise specified on plans, top of all water mains shall be 5.5 ft. below existing or proposed road centerline, or 5.5 ft. below existing or proposed ground, whichever results in lower elevation. An 18" minimum vertical clearance between storm or sanitary sewer shall be maintained. This shall be the case where the water main is either above or below the sewer with preference to the water main located above the sewer.

8. Installed pipe shall be pressure tested and leak tested in accordance with AWWA standards. New, cleaned and repaired water mains shall be disinfected in accordance with AWWA standard C651. The specifications shall include detailed procedures for adequate flushing, disinfection, and microbiological testing of all water mains.

9. The design engineer shall furnish The City of Farmington with mylar "As-Built" water main plans along with a computer disk using the most recent release of AutoCad, upon job completion. Plans shall locate all water mains, hydrants and gate valves and wells.

10. All required cross connection devices shall be installed as required by the local plumbing inspector and in accordance with the standards of the Michigan Department of Public Health.

11. Three (3) working days before you dig, dial MISS DIG at 1-800-482-7171.

12. Where work is to be performed in the vicinity of a City of Detroit water main, the contractor shall notify the Detroit Metropolitan Water Services Inspection Department, (Bill Gowins) at (313) 833-8649 (7:30-9:30 AM, 3:30-4:30 PM), 3 working days prior to start of construction, and request an inspection of the job.

13. All pipe and all pipe fittings shall be made in the U.S.A.

14. All bolts on all flanged and mechanical joint fittings shall be domestic origin high strength, low alloy COR-BLUE steel bolts or approved equal. These bolts shall meet the current provisions of American National Standard ANSI/AWWA C111/A21.11-90 for rubber gasket joints for ductile iron pressure pipes and fittings. Bolt manufacturer's certificate of compliance must accompany each shipment.

15. All bolts used in securing fittings to the water main shall be "COR-BLUE" bolts or approved equal.

16. BACKFILL NOTE: Under road surfaces, pavement, sidewalk, curb, driveways and where the edge of the trench is within 3 (three) feet of the pavement or as called for on the plans, the trench depth shall be 4 (four) inches lower than the proposed water main elevation. The trench width shall be the outside diameter plus 16 (sixteen) inches for pipe diameters up to 36 (thirty-six) inches and larger. The trench shall be backfilled by placing granular material by the "controlled Density Method" or other means having approval of the engineer and compacting it to 95 (ninety-five) percent of its maximum unit weight.

17. Tracing wire shall be provided for all water main. Wire shall be copper, 12 gage stranded, insulated per city requirements Connection is required at all service leads, hydrants, and gate well, with exposed wire above the ground surface. Conductivity shall be tested by the City prior to the acceptance of the main. All splices shall be made using a gel-cap product which provides a waterproof seal, such as 3M's Direct Bury Splice kit #P054007/09964 or approved equal.

18. Polywrap shall be placed as required by the City.

19. Like size to like size tapping sleeves shall not be used with transite pipe.

20. Where water main is located under pavement, the City shall not be responsible for repairing pavement within the easement in the event that maintenance or repairs to the water main become necessary.

DRAWING PATH: H:\Municipal\Farmington\City\Engineering Design Stds\APPENDICES\STD DETAILS\F-WM01.dwg Apr 21, 2016 - 4:11pm

OHM
34000 Plymouth Road | Livonia, MI 48150 | P (734) 522-6711 | F (734) 522-6427 | WWW.OHM-ADVISORS.COM

COPYRIGHT 2007 OHM ALL DRAWINGS AND WRITTEN MATERIALS APPEARING HEREIN CONSTITUTE THE ORIGINAL AND UNPUBLISHED WORK OF OHM AND THE SAME MAY NOT BE DUPLICATED, DISTRIBUTED, OR DISCLOSED WITHOUT PRIOR WRITTEN CONSENT OF OHM.

VERT DATUM	####
HORIZ DATUM	####
SCALE	H: 1"=40' V: 1"=4'
JOB #	####
CITY/VILLAGE/TOWNSHIP	CITY OF FARMINGTON
COUNTY	OAKLAND
RANGE	####
TOWN	####
SECTION	####
PROJ MGR	####
ENGINEER	####
CADD	####
BID DATE	####
DATE	
CLIENT:	####

REVISIONS: DATE:

CITY OF FARMINGTON
STANDARD WATER MAIN DETAILS

SHEET
42
OF 65

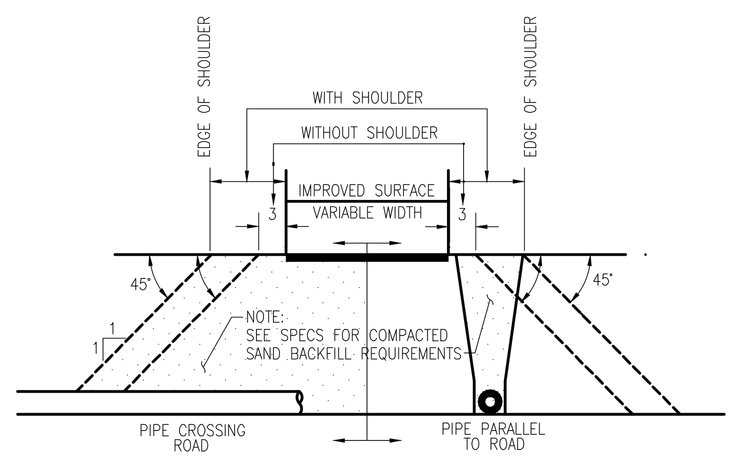

BACKFILL IN THE AREA OF STREETS, ALLEYS SIDEWALKS, DRIVES & PARKING LOTS

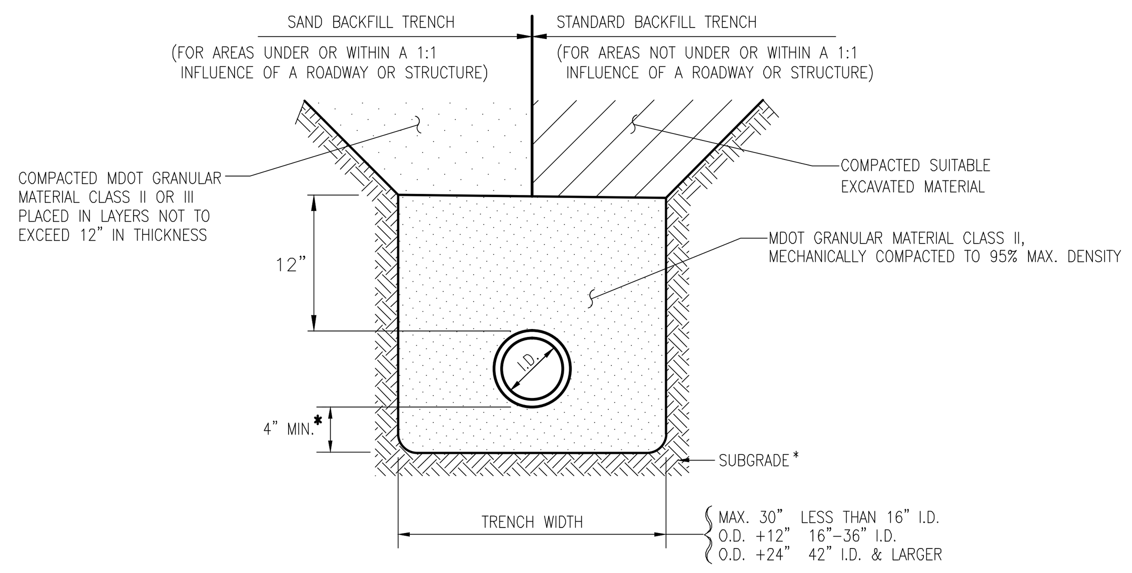

STANDARD BEDDING AND TRENCH BACKFILL DETAIL FOR WATER MAIN

* NOTE: IF THE EXISTING SUBGRADE SOILS MEET THE REQUIREMENTS FOR MDOT GRANULAR MATERIAL CLASS II (MINIMUM 4" THICK), THEN THE WATER MAIN MAY BE LAID DIRECTLY ON THE COMPACTED NATIVE SUBGRADE SOILS.

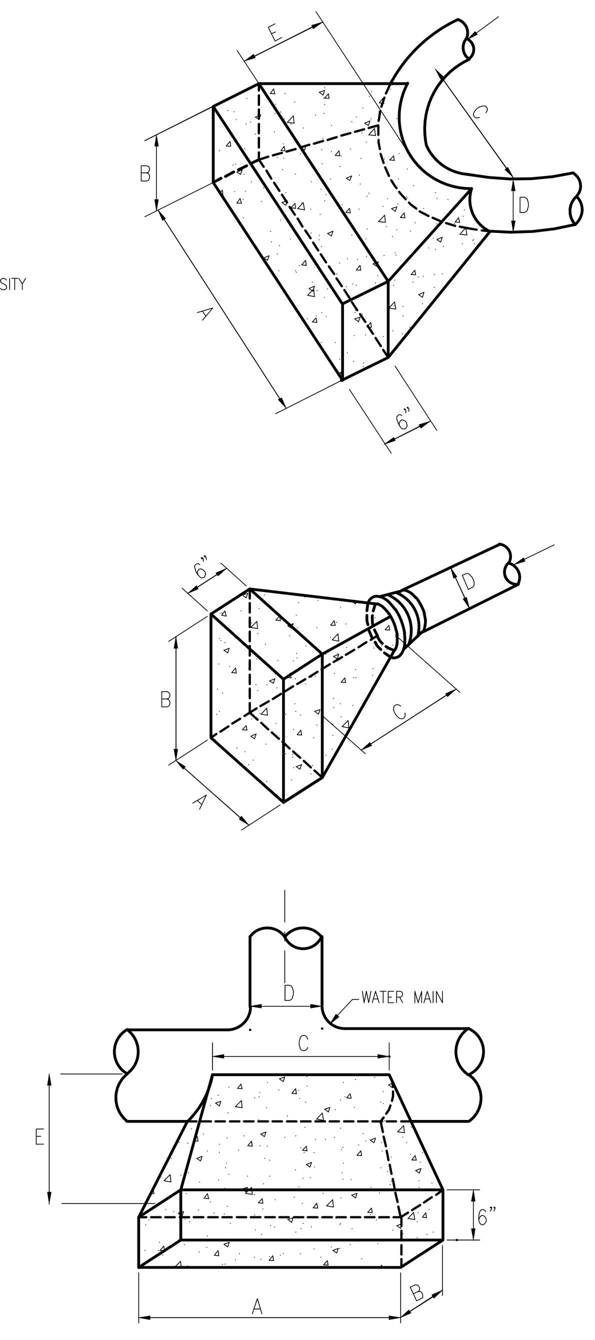

FOR 90° BENDS OR SMALLER

D	A	B	C	E MIN.
20"	8'	6.5'	3.5'	2.5'
16"	6'	4'	2.5'	2'
12"	4'	3'	2'	1.75'
10"	3'	3'	2'	1.75'
8"	3'	2'	2'	1.5'
6"	2'	1.5'	2'	1.25'

NOTE:
3000 PSI CONCRETE TO BE USED. THRUST BLOCK TO ABUT & REST AGAINST UNDISTURBED SOIL.

FOR PLUGS

D	A	B	C MIN.
20"	7'	5'	2.5'
16"	4'–10"	4'–10"	2'
12"	4'–4"	3'	1'–9"
10"	3'	2'	1'–6"
8"	2'–10"	2'–6"	1'–6"
6"	1'–6"	1'–6"	3"

FOR TEES

D	A	B	C	E MIN.
20"	6.5'	4.5'	3.5'	3'
16"	4'–8"	4'–8"	2.5'	2.75'
12"	4'	3'	2.5'	2.5'
10"	3'	2'	2'	2.25'
8"	2'–6"	2'	2'	2.25'
6"	2'	2'	2'	2.25'

THRUST BLOCK DETAILS

NOTE:
ADDITIONAL CONCRETE TO BE PLACED PER ENGINEER'S DIRECTION FOR HYDRANTS REQUIRING THRUST BLOCKS. THE THRUST BLOCKS ARE INCIDENTAL TO HYDRANT INSTALLATION.

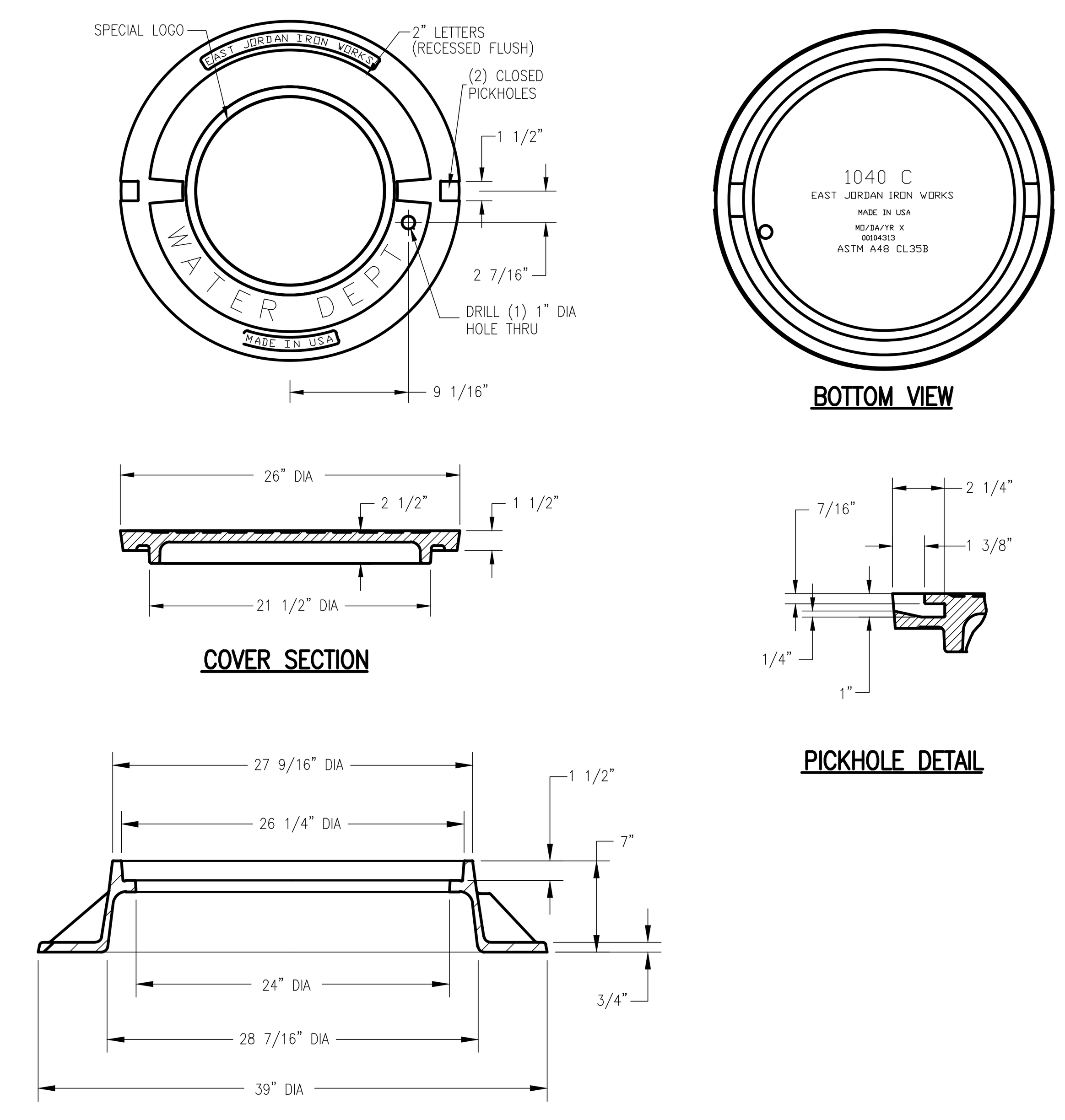

CAST IRON GATE WELL COVER E.J.I.W. 1040 TYPE "C" SOLID COVER

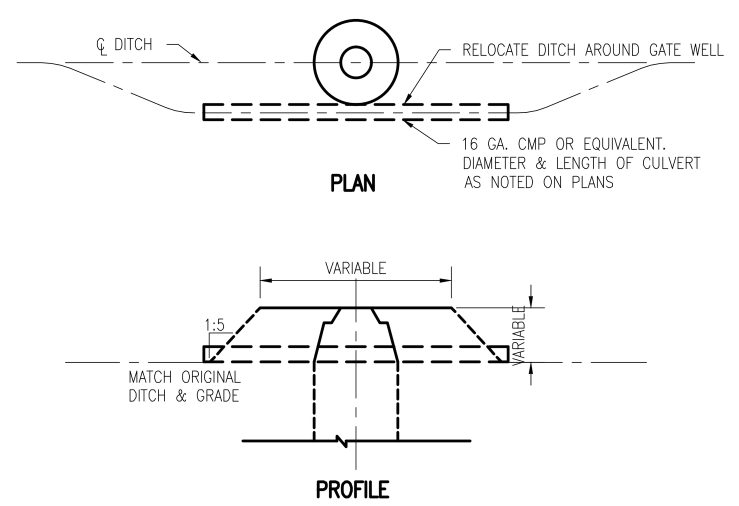

DITCH ENCLOSURE AT GATE WELL OR HYDRANT

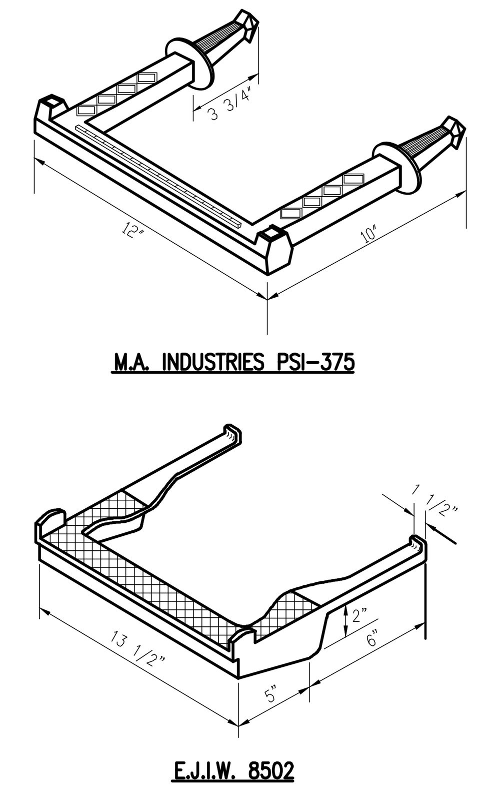

STANDARD MANHOLE STEP

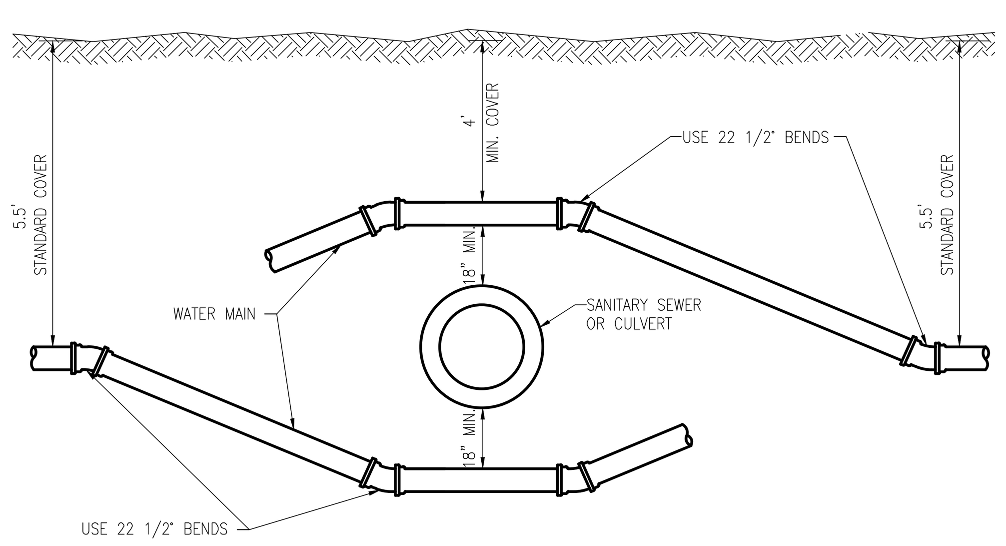

SEWER OR CULVERT CROSSING

NOTE:
1. BENDS CAN BE ELIMINATED FOR MINOR VERTICAL DEFLECTIONS IN DUCTILE IRON PIPE (1 DEGREE OR LESS). IN THIS CASE, THE PIPE MAY BE DEFLECTED UP TO 4° PER JOINT.
2. PLACE AND COMPACT GRANULAR MATERIAL CLASS II BETWEEN PIPES IN THE VICINITY OF THE CROSSING.
3. PROVIDE JOINT RESTRAINT BY MEANS OF THRUST BLOCKS AND VERTICAL ANCHORAGES OR OTHER METHOD THAT IS APPROVED BY THE ENGINEER.

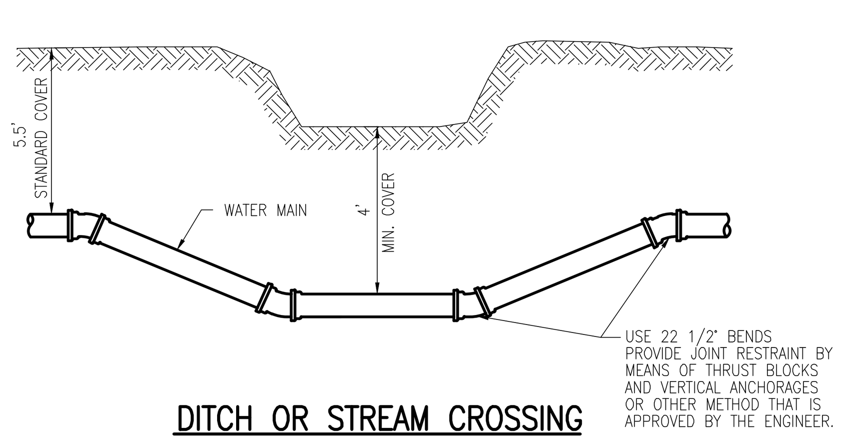

DITCH OR STREAM CROSSING

DIA. OF WATER MAIN, D	BEND, b	A	NUMBER OF BARS
6"	45°	2'0"	2
8"	22 1/2°	2'0"	2
	45°	3'3"	2
12"	22 1/2°	3'3"	2
	45°	4'0"	3
16"	11 1/4°	3'3"	2
	22 1/2°	4'0"	3

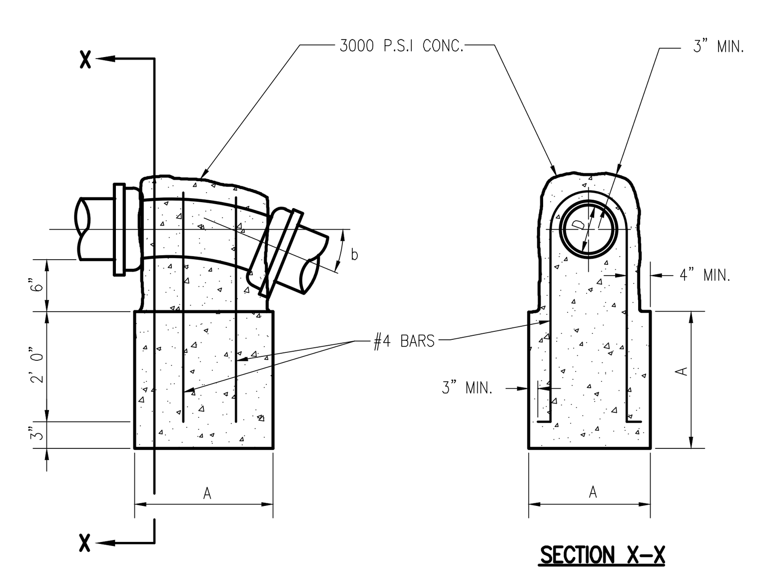

VERTICAL ANCHORAGE DETAIL

DETAILS ARE TYPICAL FOR WATER MAIN CONSTRUCTED IN CASING PIPE

8" BRICK BULKHEAD SHALL BE PLACED AT EACH END OF CASING PIPE AFTER PIPE INSTALLATION. SKIDS SHALL TERMINATE 12" FROM END OF CASING TO ALLOW BULKHEADING OF ENTIRE PIPE CIRCUMFERENCE.

WATER MAIN SHALL BE STRAPPED TO WOLMANIZED SKIDS SO THAT THE CARRIER PIPE CANNOT ROLL OVER OR FLOAT. SKIDS SHALL BE 85% OF PIPE LENGTH.

THE CONTRACTOR SHALL SUBMIT IN WRITING THE DETAILS OF THE APPROPRIATE PIPE CASING INSTALLATION AND JOINT RESTRAINT FOR THE REVIEW AND APPROVAL BY THE ENGINEER BEFORE INSTALLATION OF ANY CASING STARTS.

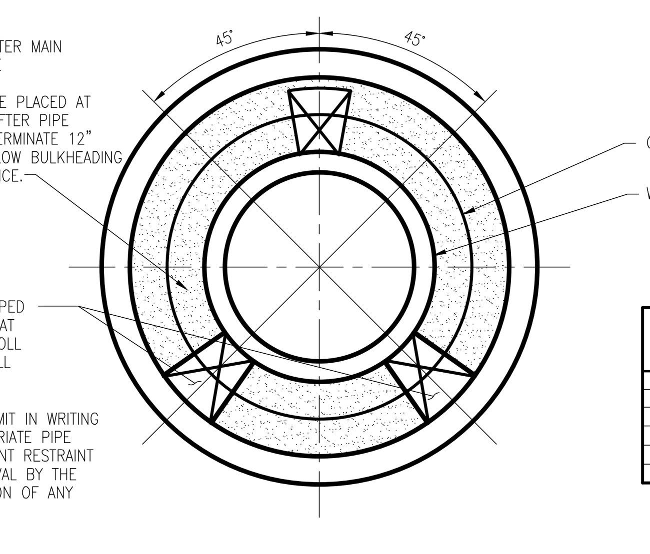

DIA. OF WATER MAIN	MIN. (I.D.) "A"	ROAD CROSSING MIN."B"	RAILROAD* CROSSING MIN."B"
6"	16"	.312	.312
8"	18"	.375	.375
12"	20"	.375	.438
16"	24"	.375	.500
20"	30"	.375	.500
24"	36"	.375	.500

A=INSIDE DIAMETER
B=WALL THICKNESS

*** RAILROAD ROW PERMIT REQUIREMENTS MAY CALL FOR A THICKER WALL SECTION.**

PIPE BARREL SUPPORT FOR WATER MAIN CONSTRUCTED IN CASING PIPE

CASING SHALL BE SPIRAL WELDED STEEL PIPE A.S.T.M. A-252, GR. 2.

PLACE WOLMANIZED SKID ALONG THE TOP OF THE CARRIER PIPE IN ORDER TO PREVENT THE CARRIER PIPE FROM ROLLING OVER OR FLOATING. IF THE CONTROLLING AGENCY PERMIT REQUIREMENTS INDICATE THAT SAND OR GROUT MUST BE PLACED BETWEEN THE CASING PIPE AND CARRIER PIPE, THEN THE SAND OR GROUT SHALL BE PLACED IN ACCORDANCE WITH THE PERMIT SPECIFICATIONS. UNLESS OTHERWISE DIRECTED BY THE ENGINEER, RESTRAINED JOINTS SHALL BE REQUIRED FOR WATER MAIN JOINTS THAT ARE LOCATED INSIDE THE CASING PIPE IN THE EVENT THAT NO GROUT OR SAND IS PLACED BETWEEN THE CASING PIPE AND CARRIER PIPE.

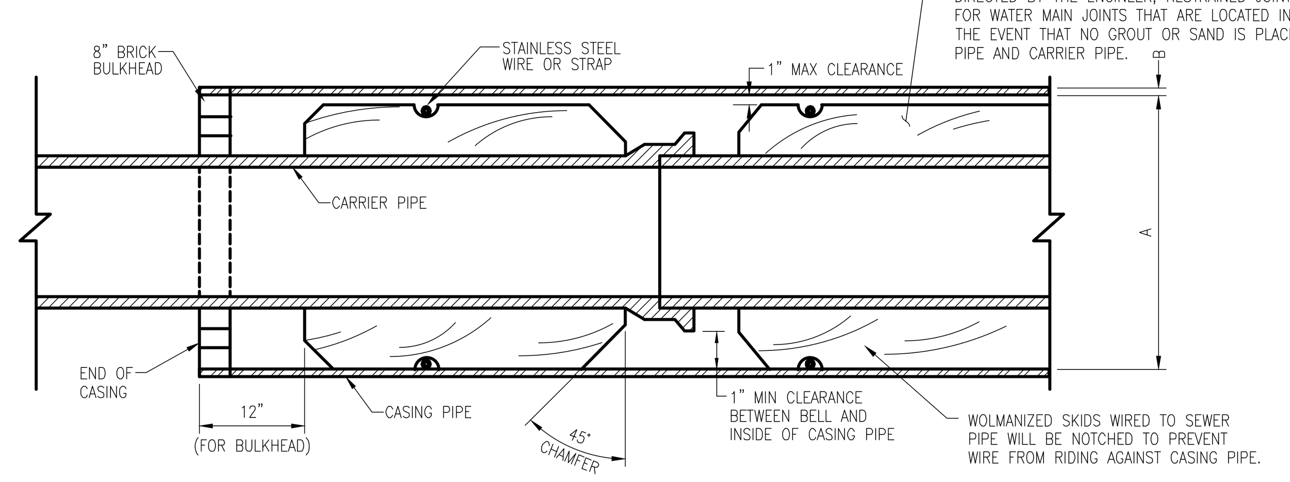

STANDARD CASING SECTION

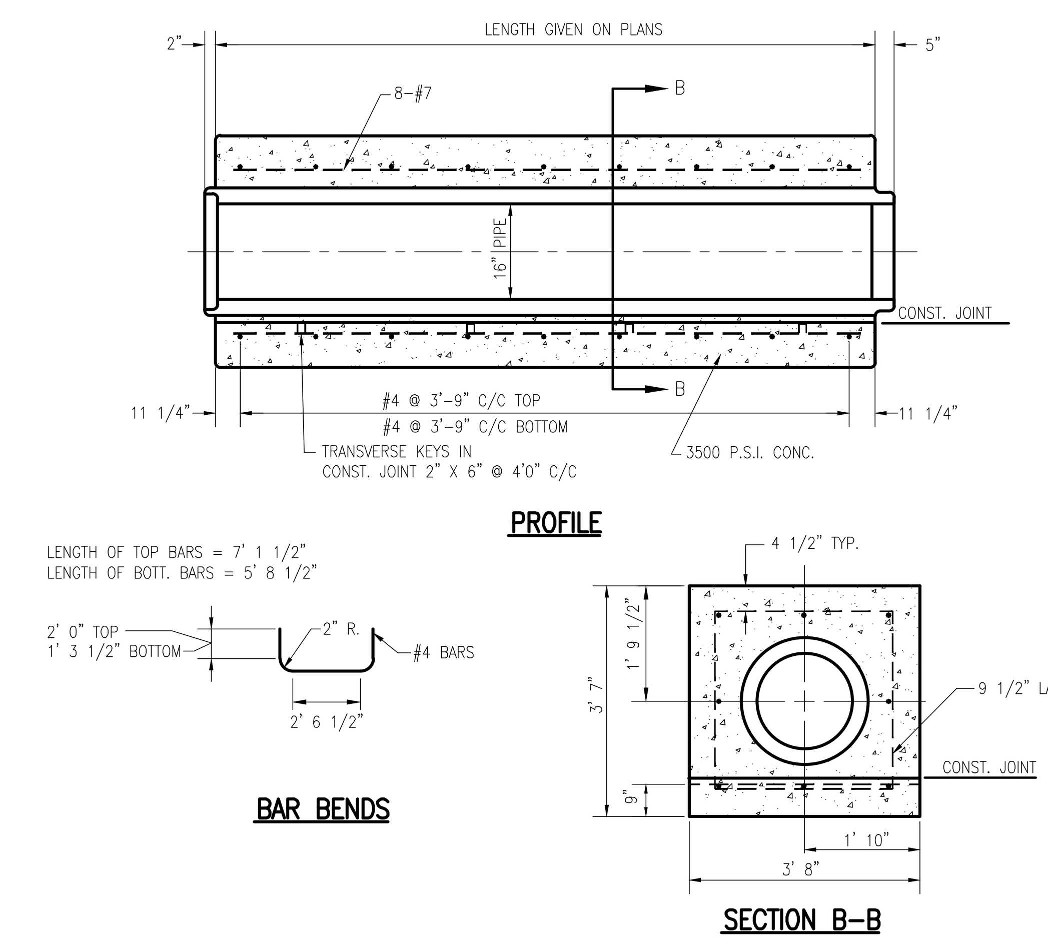

16" WATER MAIN ENCASEMENT UNDER DRAINS & DITCHES

DRAWING PATH: H:\Municipal\Farmington\City\Engineering Design Stds\APPENDICES\STD DETAILS\F-wm02.dwg Apr 21, 2016 - 4:12pm

DATE	BID DATE	CADD	ENGINEER	PROJ MGR	SECTION	TOWN	RANGE	COUNTY	CITY/VILLAGE/TOWNSHIP	SCALE	HORIZ DATUM	VERT DATUM
	####	####	####	####	####	####	####	OAKLAND	CITY OF FARMINGTON	H: 1"=40' V: 1"=4'	####	####

CLIENT: ####
JOB #: ####
REVISIONS: DATE:
REVISIONS: DATE:
REVISIONS: DATE:

OHM
34000 Plymouth Road | Livonia, MI 48150 | P (734) 522-6711 | F (734) 522-6427 | WWW.OHM-ADVISORS.COM

COPYRIGHT 2007 OHM ALL DRAWINGS AND WRITTEN MATERIALS APPEARING HEREIN CONSTITUTE THE ORIGINAL AND UNPUBLISHED WORK OF OHM AND THE SAME MAY NOT BE DUPLICATED, DISTRIBUTED, OR DISCLOSED WITHOUT PRIOR WRITTEN CONSENT OF OHM

CITY OF FARMINGTON
STANDARD WATER MAIN DETAILS

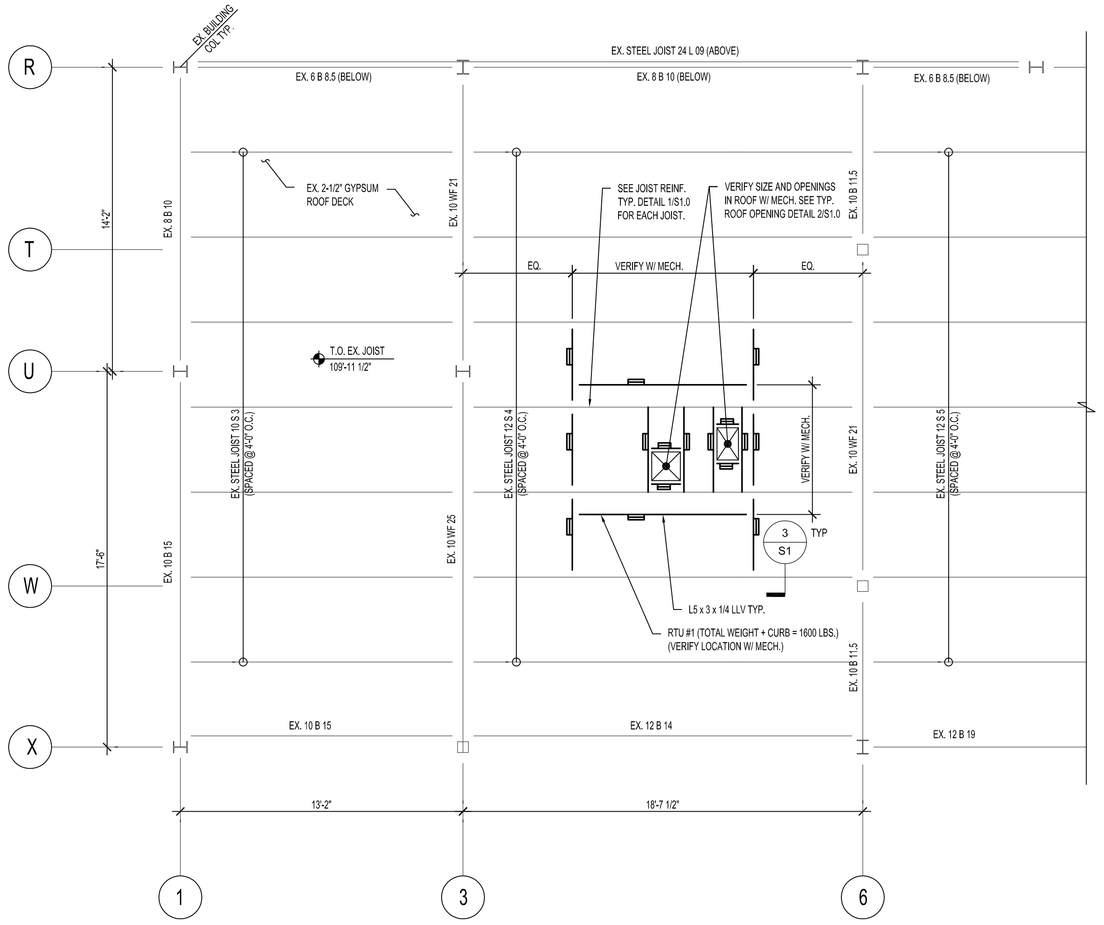

PARTIAL ROOF FRAMING PLAN@ RTU #1

NORTH

SCALE 1/4" = 1'-0"

NOTES:

1. T.O. EX. JOIST = 109' - 11 1/2"
2. RTU #1 (TOTAL WEIGHT + CURB) = 1600 LBS.
3. REF. DWGS. - EARL G. MEYER ARCHITECT - BEECHVIEW ELEMENTARY SCHOOL JOB NO. 828 (SHEETS: S-1, S-2, 1, 2, 3, 4, 5, 6, 7, AND 8)

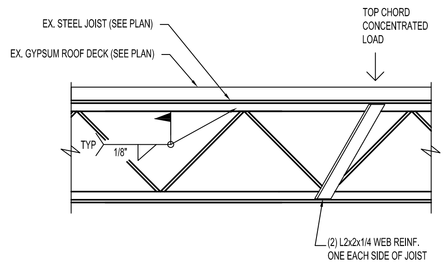

1 / S1.0 **JOIST REINF**

SCALE: NOT TO SCALE

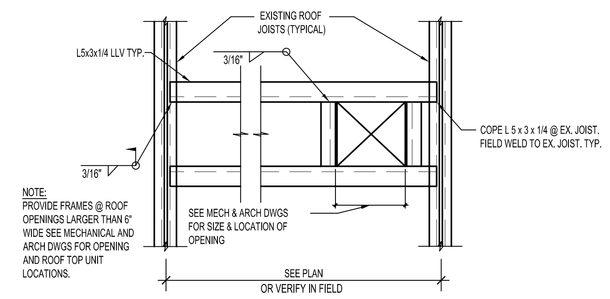

2 / S1.0 **TYP ROOF OPENING DETAIL**

SCALE: NOT TO SCALE

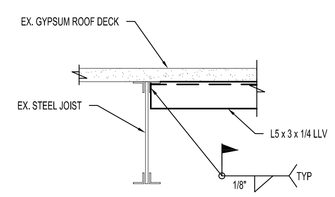

3 / S1.0 **Section**

SCALE: NOT TO SCALE

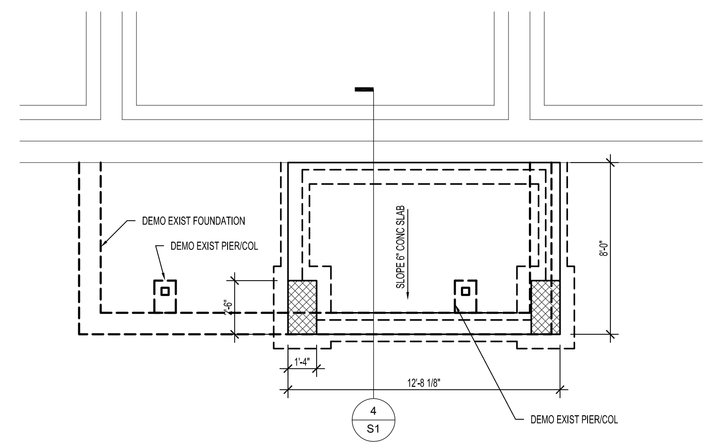

PARTIAL ENTRY FOUNDATION

NORTH

SCALE 1/4" = 1'-0"

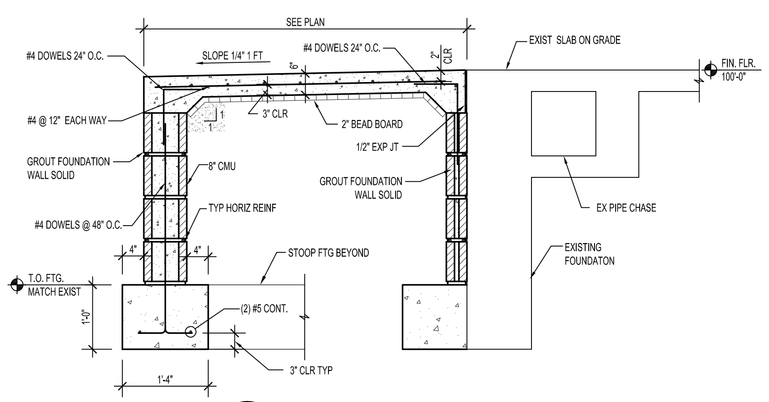

4 / S1.0 **STOOP**

SCALE: 3/4" = 1'-0"

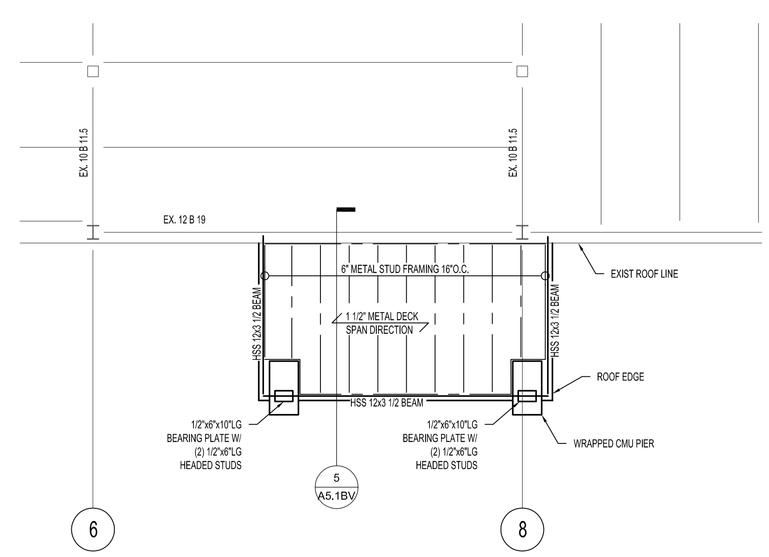

PARTIAL CANOPY ROOF FRAMING PLAN

NORTH

SCALE 1/4" = 1'-0"

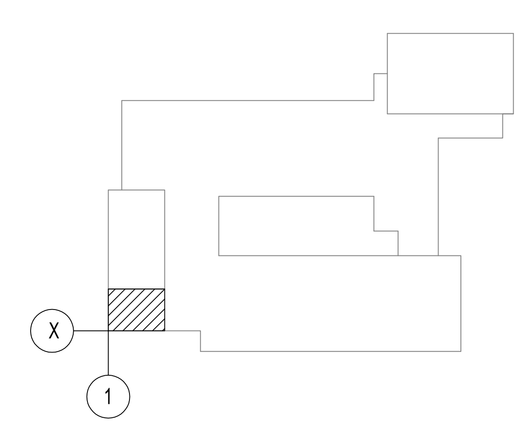

KEY PLAN

NORTH

N.T.S.

STRUCTURAL STEEL

1. THE FOLLOWING CODE SHALL GOVERN THE DETAILING, FABRICATION & ERECTION OF ALL STEEL:
   A. MANUAL OF STEEL CONSTRUCTION, 14TH EDITION (AMERICAN INSTITUTE OF STEEL CONSTRUCTION)

   STEEL PLATE, CHANNELS & ANGLES —— ASTM A-36
2. ALL WELDING SHALL BE PERFORMED IN ACCORDANCE WITH AMERICAN WELDING SOCIETY (AWS) D1.1-90 STRUCTURAL WELDING CODE. E70XX ELECTRODES SHALL BE USED FOR WELDED SHOP & FIELD CONNECTIONS.
3. PROVIDE AND HAVE IN PLACE ADEQUATE LATERAL BRACING & VERTICAL SUPPORTS FOR THE SAFE ERECTION AND TRUE ALIGNMENT OF THE STRUCTURAL STEEL. THE CONTRACTOR ASSUMES FULL RESPONSIBILITY FOR THE SAFE ERECTION & TEMPORARY BRACING OF STRUCTURAL STEEL.
4. VERIFY NUMBER AND SIZE OF OPENINGS IN ROOF, WALLS, AND FLOOR WITH ARCHITECTURAL, MECHANICAL AND ELECTRICAL DRAWINGS, SEE STRUCTURAL DRAWINGS AND SPECIFICATIONS. FOR STRUCTURAL REQUIREMENTS. VERIFY ALL DETAILS & INFORMATION WITH THE APPROPRIATE CONTRACTOR
5. ALL DIMENSIONS RELATED TO STRUCTURAL STEEL USED TO SUPPORT EQUIPMENT OR FRAME OPENINGS SHALL BE VERIFIED WITH CERTIFIED AND APPROVED SHOP DRAWINGS OF PURCHASED EQUIPMENT PRIOR TO DETAILING AND FABRICATION.
6. ALL EDGES OF METAL DECK SHALL BE SUPPORTED AT A CHANGE IN DECK SPAN WHETHER SHOWN ON DRAWINGS OR NOT. PROVIDE TUBE STEEL OR A DOUBLE ANGLE BETWEEN JOIST AND METAL DECK.
7. CONTRACTOR TO PROVIDE VERIFICATION AND INSPECTION OF STEEL CONSTRUCTION PER 2012 MBC CODE.

WAKELY ASSOCIATES, INC.
ARCHITECTS

30500 VAN DYKE AVENUE
SUITE M-7
WARREN, MICHIGAN 48093
PH: 586.573.4100
FX: 586.573.0822
www.WakelyAIA.com

BEECHVIEW ELEMENTARY

FARMINGTON PUBLIC SCHOOLS

26850 WESTMEATH CT., FARMINGTON HILLS, MI 48334

PRELIMINARY ■
DESIGN DEVELOPMENT ■
CONSTRUCTION ■
FINAL RECORD □

DRAWN BY CAM
CHECKED BY JWQ

REVISIONS

DATE: 12/13/17

SHEET NO.

S1.0

JOB NO.

171712A

SNYDER & STALEY ENGINEERING, P.L.C.
CONSULTING ENGINEERS
3085 BAY ROAD SUITE 6
SAGINAW, MI 48603
PH: (989) 797-1710 FX: (989) 797-1715
PROJECT NO. 17-828-252

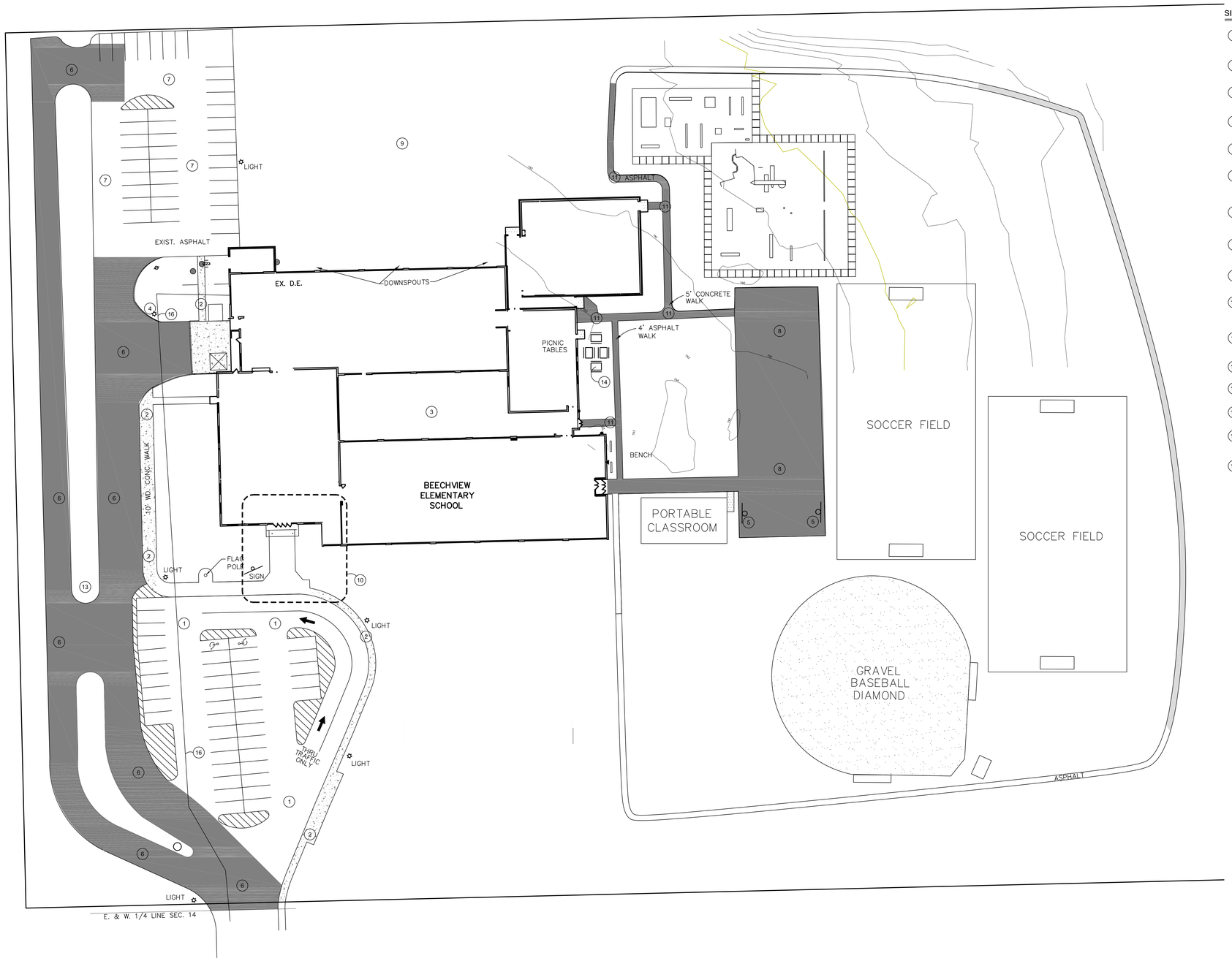

1 / - ARCHITECTURAL SITE PLAN

SCALE: 1/32" = 1'-0"

SITE PLAN NEW WORK KEY NOTES:

1. REMOVE AND REPAIR PARKING LOT - PROVIDE NEW PAVEMENT AS INDICATED ON CIVIL DRAWINGS
2. R/R CONCRETE SIDEALKS
3. FIX DRAINAGE AT COURTYARD
4. FIX DRAINAGE @ PLAYGROUND - ADD NEW DRYWELL, BIOSWAL, AND EXTEND 7 ROOF CONDUCTORS.
5. NEW PLAYGROUND EQUIPMENT
6. R/R PAVEMENT- PROVIDE NEW HEAVY DUTY PAVEMENT AT BUS LOOP AS INDICATED ON CIVIL DRAWINGS
7. JOINT SEAL, SEAL COAT, AND RESTRIPE PARKING LOT
8. REMOVE AND REPLACE EXISTING PLAY PAD. RESTRIPE TO MATCH EXISTING GAME STRIPING.
9. REGRADE BACK LAWN FOR DRAINAGE.
10. REDESIGN CONCRETE SIDEWALK AT ENTRY FOR NEW DESIGN. (FINAL DESIGN TDB.)
11. REMOVE AND REPLACE EXISTING BITUMINOUS WALKS
12. CONCRETE PAVEMENT REMOVE AND REPAIR
13. EXTEND CULVERT
14. REMOVE AND REINSTALL VERTICAL SUPPORTS AT PICNIC TABLES. CONFIRM LOCATIONS WITH OWNER
15. REMOVE REPLACE EXISTING WOOD DUMPSTER SURROUND. REPLACE EXISTING 1 FOR 1. REUSE EXISTING GALVANIZED METAL PIPE SUPPORT.
16. PROVIDE ALTERNATE FOR FULL REPLACEMENT OF EXISTING WATER MAIN.

WA

WAKELY ASSOCIATES, INC.
ARCHITECTS

30500 VAN DYKE AVENUE
SUITE M-7
WARREN, MICHIGAN 48093
PH: 586.573.4100
FX: 586.573.0822
www.WakelyAIA.com

FARMINGTON PUBLIC SCHOOLS - 2015 BOND
2018 PROJECTS
KENBROOK & BEECHVIEW ELEMENTARY SCHOOLS

BEECHVIEW ELEMENTARY SCHOOL

ARCHITECTURAL SITE PLAN

PRELIMINARY ☐
DESIGN DEVELOPMENT ☐
CONSTRUCTION ☐
FINAL RECORD ■

DRAWN BY NJL
CHECKED BY BJS

REVISIONS

DATE: December 6, 2017

SHEET NO.

AS1.0BV

JOB NO. 171712A

GENERAL NOTES:

1. REFER TO SHEET G4.1 FOR TYPICAL NOTES, SYMBOLS, GENERAL INFORMATION, AND ABBREVIATIONS.
2. REFER TO SHEET G4.2 FOR REFERENCED KEYNOTES.

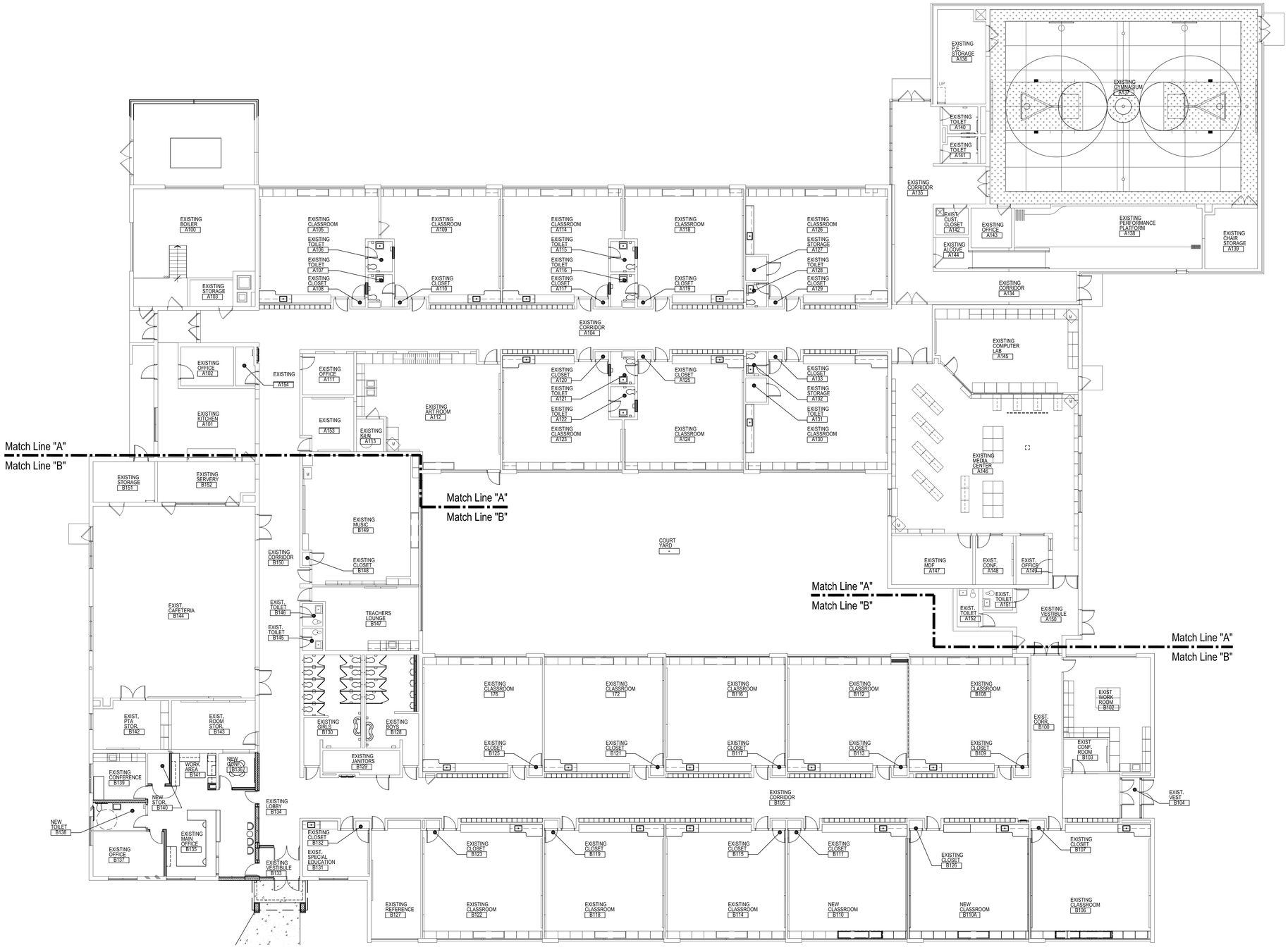

1 COMPOSITE PLAN

SCALE: 3/32" = 1'-0"

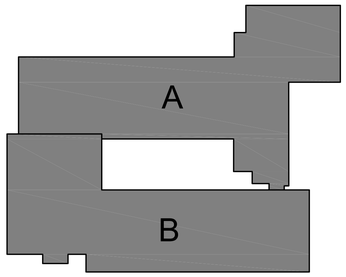

KEY PLAN

N.T.S.

WAKELY ASSOCIATES, INC.
ARCHITECTS

30500 VAN DYKE AVENUE
SUITE M-7
WARREN, MICHIGAN 48093
PH: 586.573.4100
FX: 586.573.0822
www.WakelyAIA.com

FARMINGTON PUBLIC SCHOOLS - 2015 BOND
2018 PROJECTS
KENBROOK & BEECHVIEW ELEMENTARY SCHOOLS

BEECHVIEW ELEMENTARY SCHOOL

COMPOSITE PLAN

PRELIMINARY ☐
DESIGN DEVELOPMENT ☐
CONSTRUCTION ☐
FINAL RECORD ■

DRAWN BY NJL
CHECKED BY BJS

REVISIONS

DATE: December 6, 2017

SHEET NO.
A1.0BV

JOB NO.
171712A

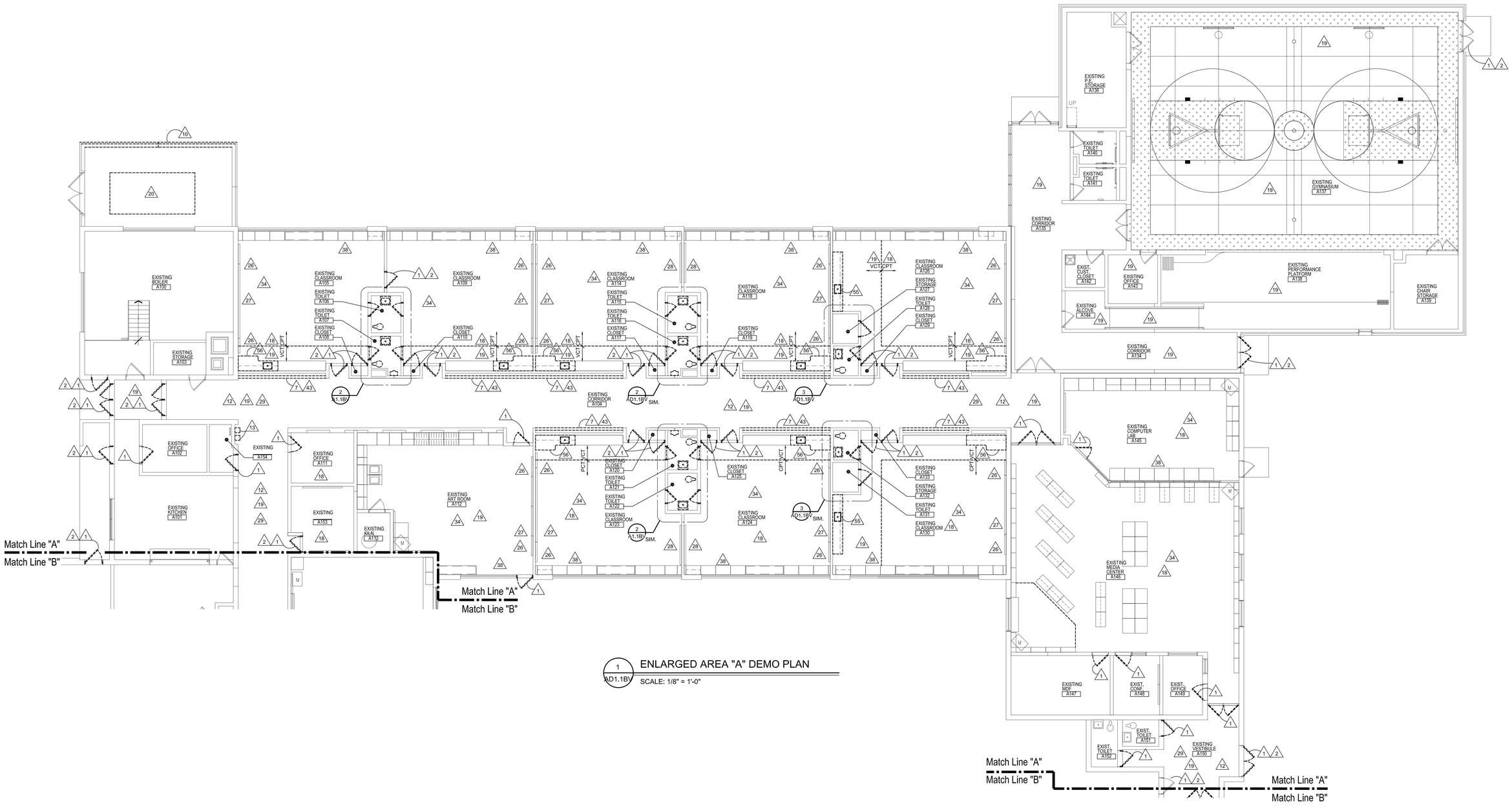

1 AD1.1BV ENLARGED AREA "A" DEMO PLAN

SCALE: 1/8" = 1'-0"

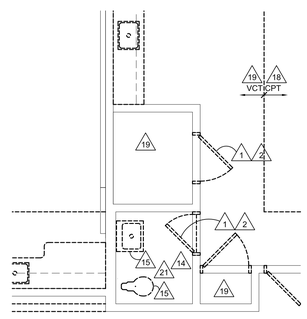

3 AD1.1BV ENLARGED DEMO PLAN AT INDIVIDUAL TOILETS - A106 AND A107

SCALE: 1/4" = 1'-0"

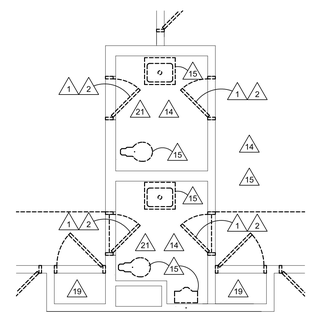

2 AD1.1BV ENLARGED DEMO PLAN AT INDIVIDUAL TOILETS - A106 AND A107

SCALE: 1/4" = 1'-0"

GENERAL NOTES:

1. REFER TO SHEET G4.1 FOR TYPICAL NOTES, SYMBOLS, GENERAL INFORMATION, AND ABBREVIATIONS.
2. REFER TO SHEET G4.2 FOR REFERENCED KEYNOTES.

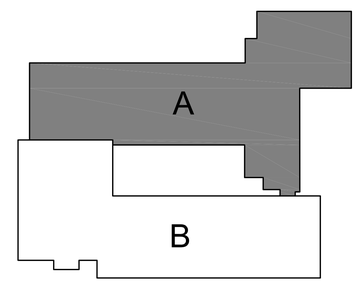

KEY PLAN

N.T.S.

WAKELY ASSOCIATES, INC.
ARCHITECTS

30500 VAN DYKE AVENUE
SUITE M-7
WARREN, MICHIGAN 48093
PH: 586.573.4100
FX: 586.573.0822
www.WakelyAIA.com

FARMINGTON PUBLIC SCHOOLS - 2015 BOND
2018 PROJECTS
KENBROOK & BEECHVIEW ELEMENTARY SCHOOLS

BEECHVIEW ELEMENTARY SCHOOL

ENLARGED AREA "A" PLAN

PRELIMINARY ☐
DESIGN DEVELOPMENT ☐
CONSTRUCTION ■
FINAL RECORD ☐

DRAWN BY NJL
CHECKED BY BJS

REVISIONS

DATE: December 12, 2017

SHEET NO.

AD1.1BV

JOB NO. 171712A

GENERAL NOTES:

1. REFER TO SHEET G4.1 FOR TYPICAL NOTES, SYMBOLS, GENERAL INFORMATION, AND ABBREVIATIONS.
2. REFER TO SHEET G4.2 FOR REFERENCED KEYNOTES.

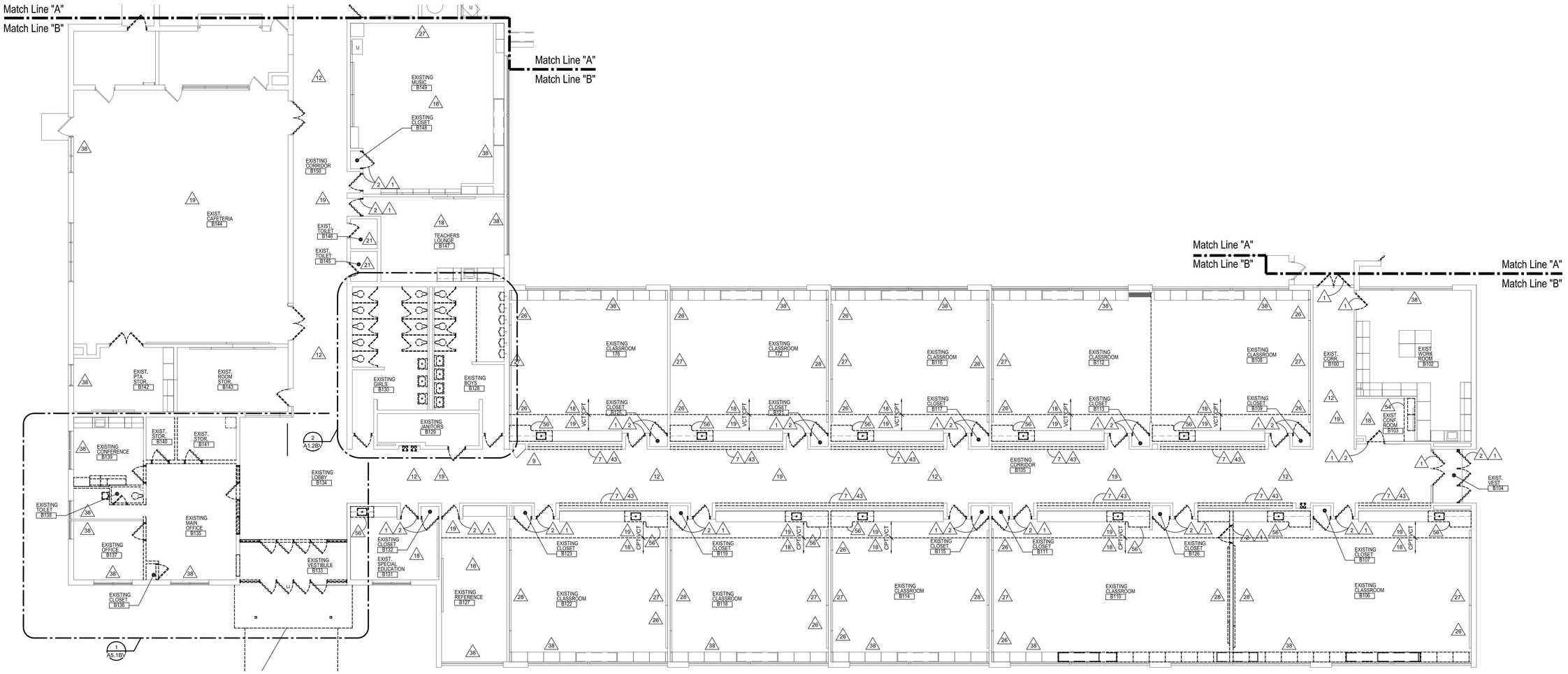

1 AD1.2BV ENLARGED AREA "B" DEMO PLAN

SCALE: 1/8" = 1'-0"

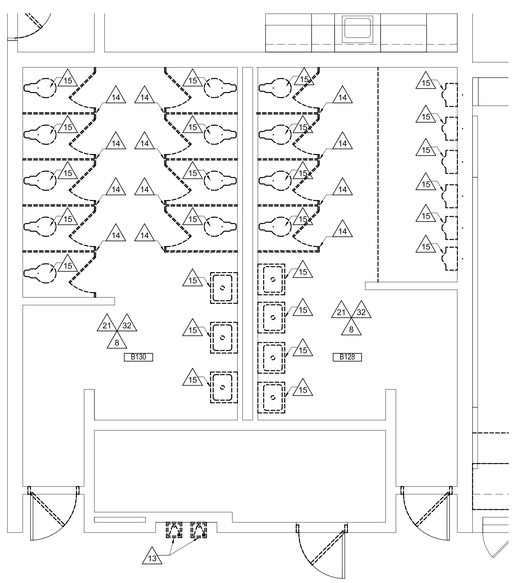

2 AD1.2BV ENLARGED DEMO PLAN AT TOILETS - B130 AND B128

SCALE: 1/4" = 1'-0"

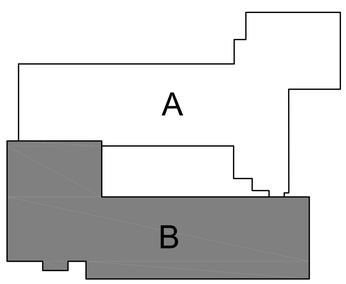

KEY PLAN

N.T.S.

WAKELY ASSOCIATES, INC.
ARCHITECTS

30500 VAN DYKE AVENUE
SUITE M-7
WARREN, MICHIGAN 48093
PH: 586.573.4100
FX: 586.573.0822
www.WakelyAIA.com

FARMINGTON PUBLIC SCHOOLS - 2015 BOND

2018 PROJECTS

KENBROOK & BEECHVIEW ELEMENTARY SCHOOLS

BEECHVIEW ELEMENTARY SCHOOL

ENLARGED AREA "B" PLAN

PRELIMINARY ☐
DESIGN DEVELOPMENT ☐
CONSTRUCTION ☐
FINAL RECORD ■

DRAWN BY NJL
CHECKED BY BJS

REVISIONS

DATE: December 6, 2017

SHEET NO.

AD1.2BV

JOB NO. 171712A

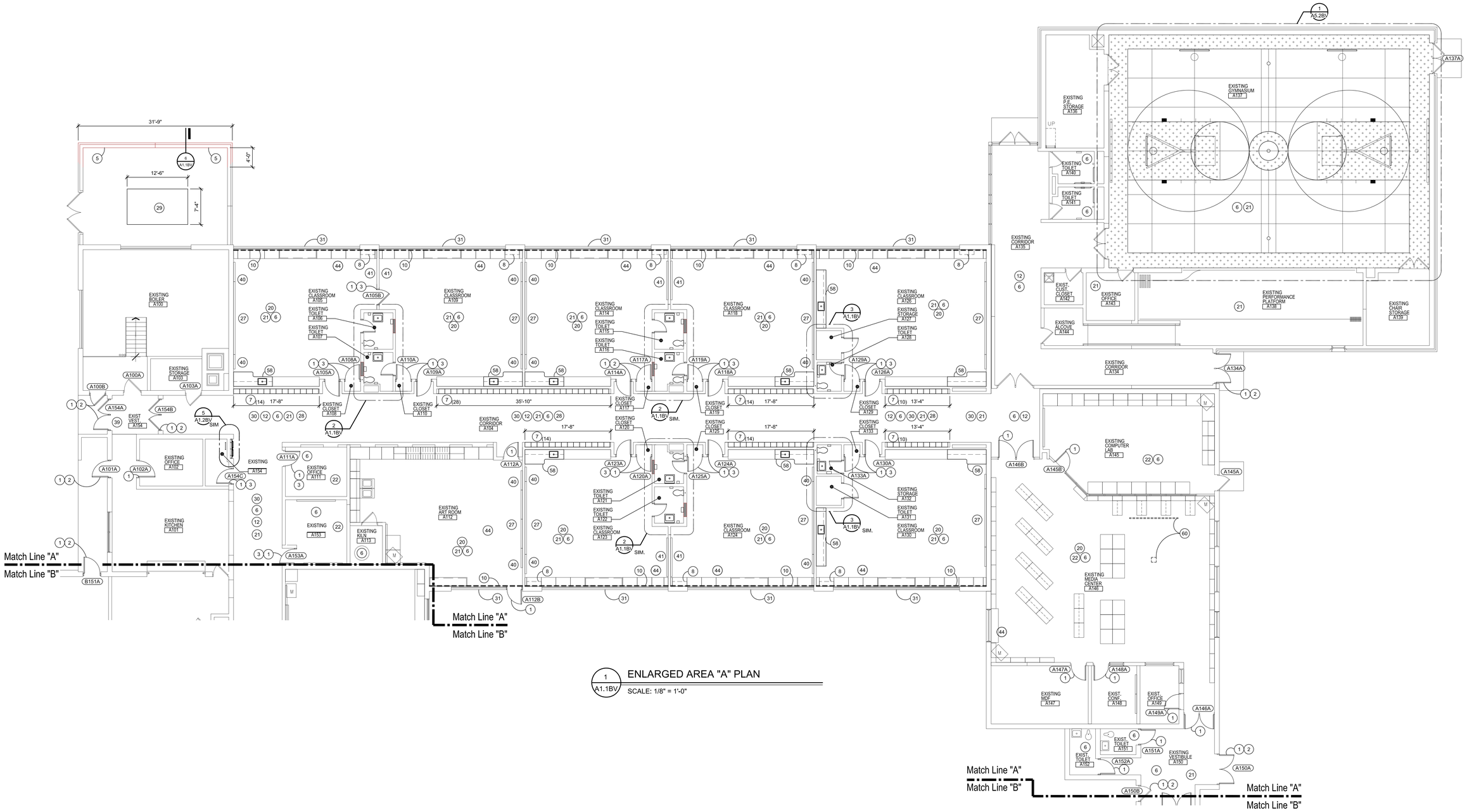

1 A1.1BV ENLARGED AREA "A" PLAN

SCALE: 1/8" = 1'-0"

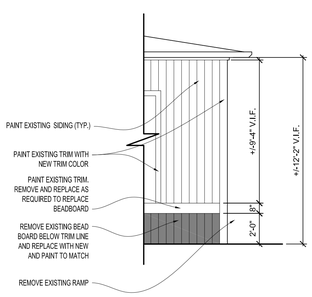

6 A1.1BV NEW SCREEN WALL DETAIL DETAIL

SCALE: 1/4" = 1'-0"

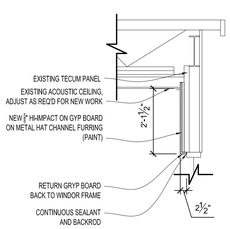

5 A1.1BV TYPICAL MOBILE CLASSROOM DETAIL

SCALE: 1/4" = 1'-0"

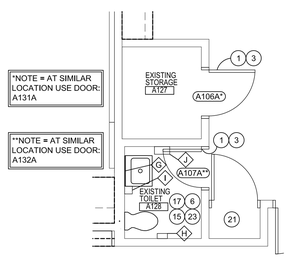

4 A1.1BV TYP. CLASSROOM SOFFIT DETAIL

SCALE: 1/2" = 1'-0"

TOILET ACCESSORY LEGEND:

- A TOILET PARTITION
- B 36" GRAB BAR
- C 42" GRAB BAR
- D 18" VERTICAL GRAB BAR
- E 36" x 36" MIRROR
- F URINAL SCREEN
- G 24" x 36" MIRROR
- H TOILET PAPER HOLDER (BY OWNER)
- I SOAP DISPENSOR (BY OWNER)
- J PAPER TOWEL DISPENSER (BY OWNER)
- K SANITARY NAPKIN DISPOSAL
- L MARBLE THRESHOLD

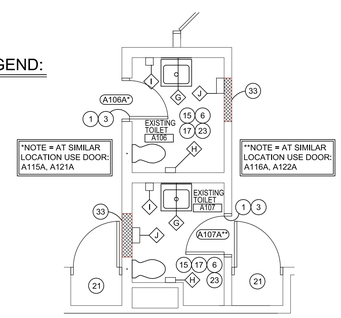

3 A1.1BV ENLARGED PLAN AT INDIVIDUAL TOILETS - A106 AND A107

SCALE: 1/4" = 1'-0"

2 A1.1BV ENLARGED PLAN AT INDIVIDUAL TOILETS - A106 AND A107

SCALE: 1/4" = 1'-0"

GENERAL NOTES:

1. REFER TO SHEET G4.1 FOR TYPICAL NOTES, SYMBOLS, GENERAL INFORMATION, AND ABBREVATIONS.
2. REFER TO SHEET G4.2 FOR REFERENCED KEYNOTES.

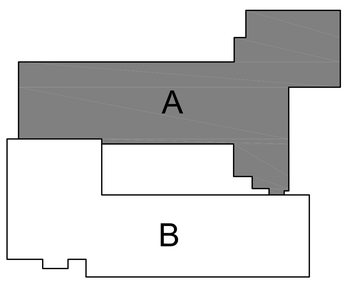

KEY PLAN

N.T.S.

WA

WAKELY ASSOCIATES, INC.
ARCHITECTS

30500 VAN DYKE AVENUE
SUITE M-7
WARREN, MICHIGAN 48093
PH: 586.573.4100
FX: 586.573.0822
www.WakelyAIA.com

FARMINGTON PUBLIC SCHOOLS - 2015 BOND
2018 PROJECTS
KENBROOK & BEECHVIEW ELEMENTARY SCHOOLS

BEECHVIEW ELEMENTARY SCHOOL

ENLARGED AREA "A" PLAN

PRELIMINARY ☐
DESIGN DEVELOPMENT ☐
CONSTRUCTION ■
FINAL RECORD ☐

DRAWN BY NJL
CHECKED BY BJS

REVISIONS

DATE: December 12, 2017

SHEET NO.
A1.1BV

JOB NO. 171712A

GENERAL NOTES:

1. REFER TO SHEET G4.1 FOR TYPICAL NOTES, SYMBOLS, GENERAL INFORMATION, AND ABBREVIATIONS.
2. REFER TO SHEET G4.2 FOR REFERENCED KEYNOTES.

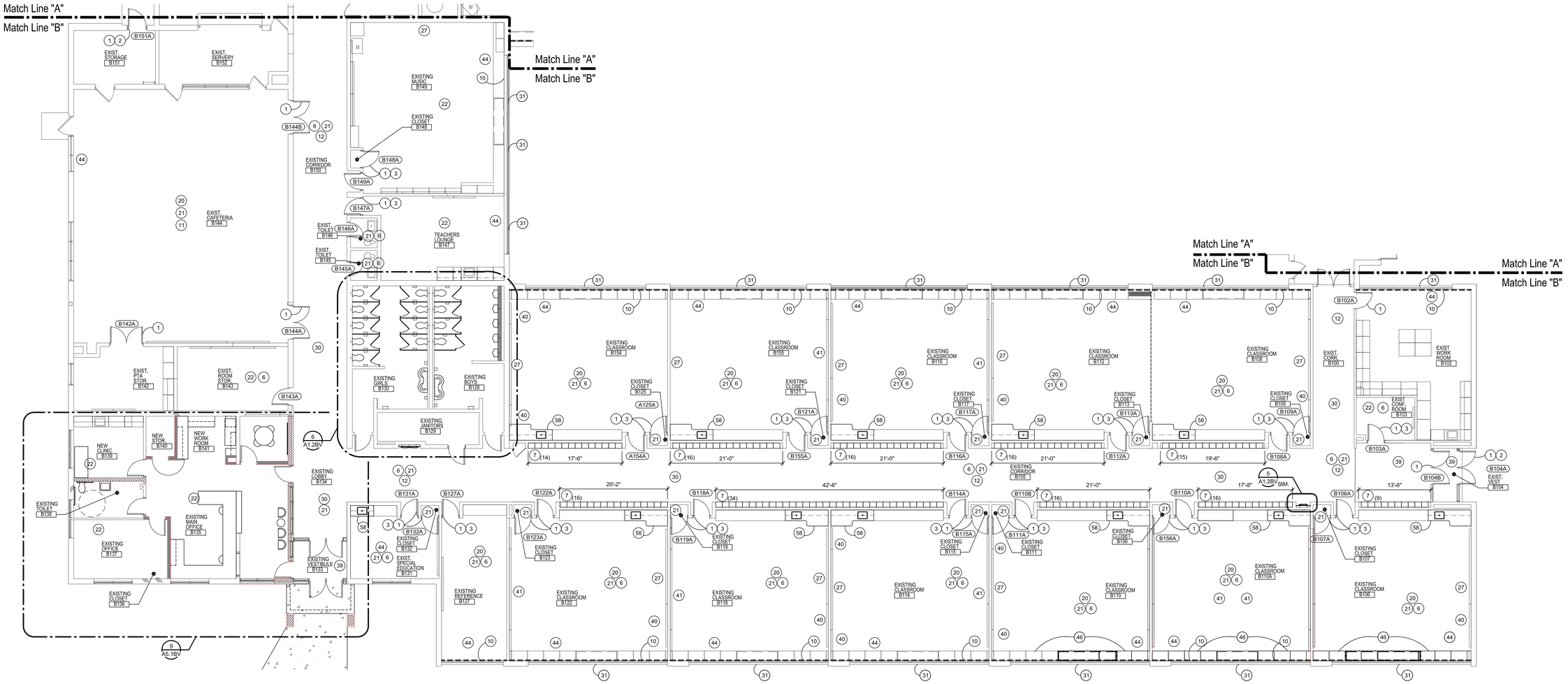

1 A1.2BV ENLARGED AREA "B" PLAN

SCALE: 1/8" = 1'-0"

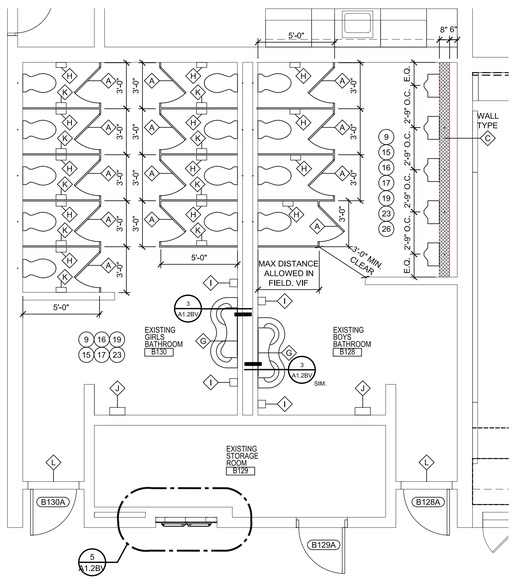

6 A1.2BV ENLARGED PLAN AT TOILETS - B130 AND B128

SCALE: 1/4" = 1'-0"

TOILET ACCESSORY LEGEND:

- A TOILET PARTITION
- B 36" GRAB BAR
- C 42" GRAB BAR
- D 18" VERTICAL GRAB BAR
- E 36" x 36" MIRROR
- F URINAL SCREEN
- G 24" x 36" MIRROR
- H TOILET PAPER HOLDER (BY OWNER)
- I SOAP DISPENSER (BY OWNER)
- J PAPER TOWEL DISPENSER (BY OWNER)
- K SANITARY NAPKIN DISPOSAL
- L MARBLE THRESHOLD

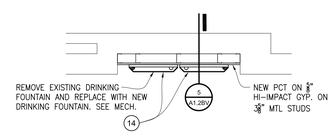

4 A1.2BV TYPICAL DRINKING FOUNTAIN SECTION DETAIL

SCALE: 1/2" = 1'-0"

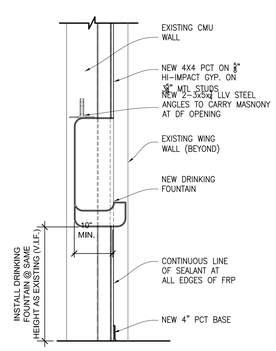

5 A1.2BV TYPICAL DRINKING FOUNTAIN SECTION DETAIL

SCALE: 3/4" = 1'-0"

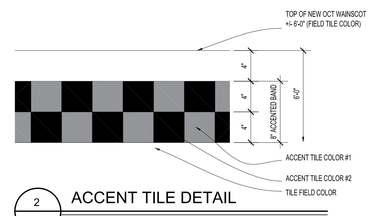

2 A1.2BV ACCENT TILE DETAIL

SCALE: 1-1/2" = 1'-0"

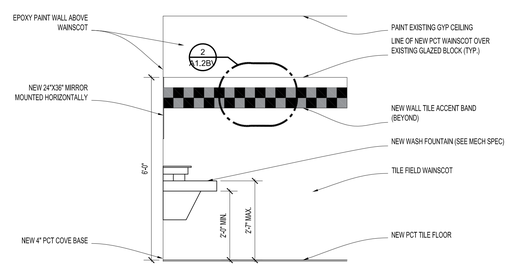

3 A1.2BV WALL SECTION - B130 AND B128

SCALE: 1/2" = 1'-0"

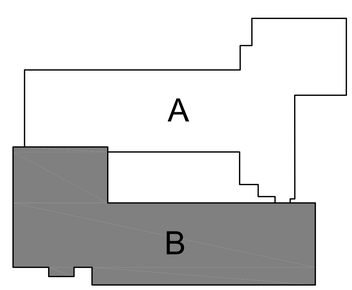

KEY PLAN

N.T.S.

WAKELY ASSOCIATES, INC. ARCHITECTS

30500 VAN DYKE AVENUE
SUITE M-7
WARREN, MICHIGAN 48093
PH: 586.573.4100
FX: 586.573.0822
www.WakelyAIA.com

FARMINGTON PUBLIC SCHOOLS - 2015 BOND
2018 PROJECTS
KENBROOK & BEECHVIEW ELEMENTARY SCHOOLS

BEECHVIEW ELEMENTARY SCHOOL

ENLARGED AREA "B" PLAN

PRELIMINARY ☐
DESIGN DEVELOPMENT ☐
CONSTRUCTION ■
FINAL RECORD ☐

DRAWN BY NJL
CHECKED BY BJS

REVISIONS

DATE: December 12, 2017

SHEET NO.

A1.2BV

JOB NO. 171712A

GENERAL NOTES:

1. REFER TO SHEET G4.1 FOR TYPICAL NOTES, SYMBOLS, GENERAL INFORMATION, AND ABBREVIATIONS.
2. REFER TO SHEET G4.2 FOR REFERENCED KEYNOTES.

KEYPLAN

N.T.S.

1 A1.0KB AREA "A" ENLARGED REFLECTEDCEILING PLAN

SCALE: 1/8" = 1'-0"

WAKELY ASSOCIATES, INC.
ARCHITECTS

30500 VAN DYKE AVENUE
SUITE M-7
WARREN, MICHIGAN 48093
PH: 586.573.4100
FX: 586.573.0822
www.WakelyAIA.com

FARMINGTON PUBLIC SCHOOLS - 2015 BOND

2018 PROJECTS

KENBROOK & BEECHVIEW ELEMENTARY SCHOOLS

KENBROOK ELEMENTARY SCHOOL

AREA "A" REFLECTED CEILING PLAN

PRELIMINARY ☐
DESIGN DEVELOPMENT ☐
CONSTRUCTION ■
FINAL RECORD ☐

DRAWN BY NJL
CHECKED BY BJS

REVISIONS

DATE: December 12, 2017

SHEET NO.

A2.1KB

JOB NO. 171712A

GENERAL NOTES:

1. REFER TO SHEET G4.1 FOR TYPICAL NOTES, SYMBOLS, GENERAL INFORMATION, AND ABBREVIATIONS.
2. REFER TO SHEET G4.2 FOR REFERENCED KEYNOTES.

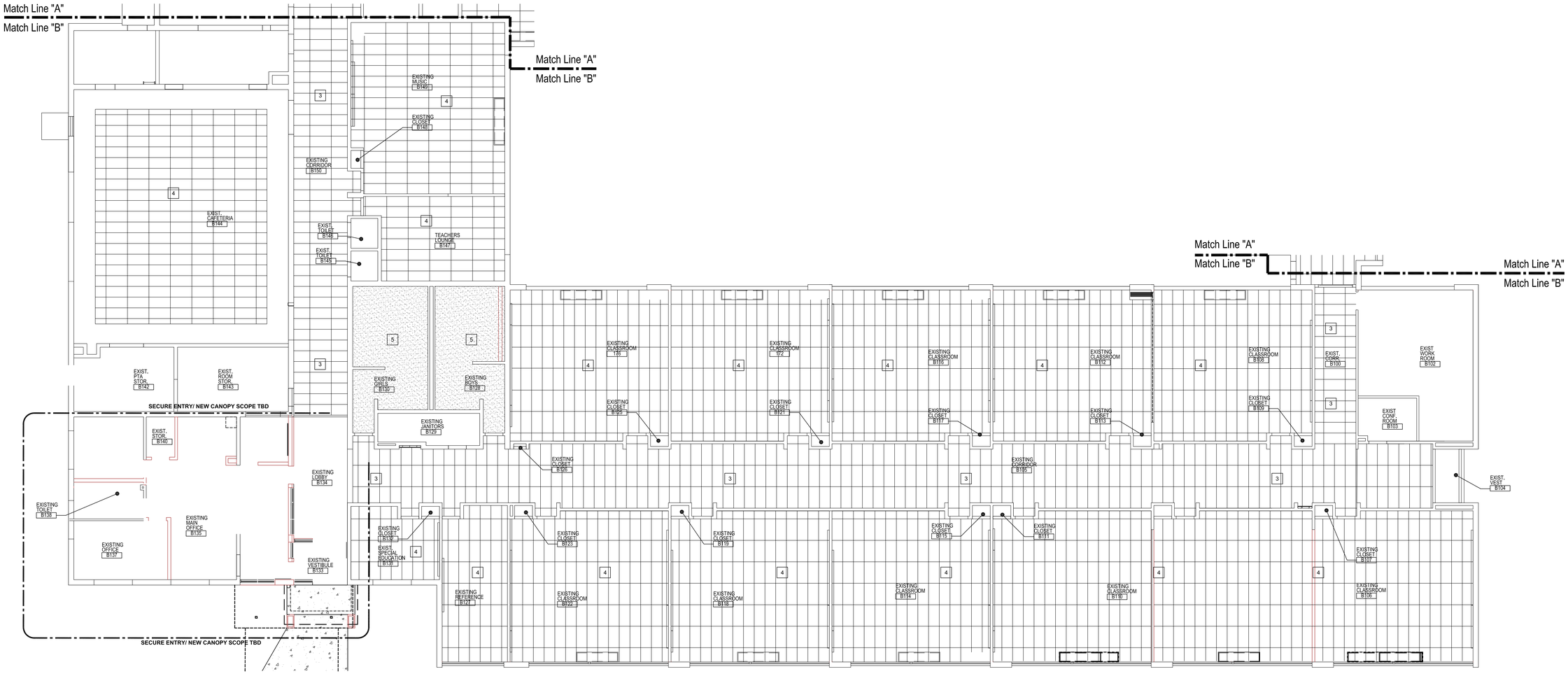

1 A2.2BV ENLARGED AREA "B" REFLECTED CEILING PLAN

SCALE: 1/8" = 1'-0"

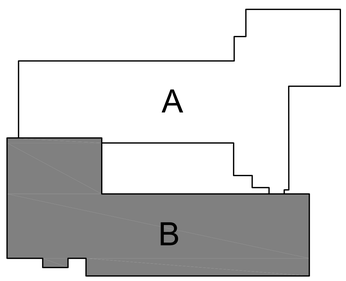

KEY PLAN

N.T.S.

WAKELY ASSOCIATES, INC.
ARCHITECTS

30500 VAN DYKE AVENUE
SUITE M-7
WARREN, MICHIGAN 48093
PH: 586.573.4100
FX: 586.573.0822
www.WakelyAIA.com

FARMINGTON PUBLIC SCHOOLS - 2015 BOND

2018 PROJECTS

KENBROOK & BEECHVIEW ELEMENTARY SCHOOLS

BEECHVIEW ELEMENTARY SCHOOL

ENLARGED AREA "B"
REFLECTED CEILING PLAN

PRELIMINARY ☐
DESIGN DEVELOPMENT ☐
CONSTRUCTION ☐
FINAL RECORD ■

DRAWN BY NJL
CHECKED BY BJS

REVISIONS

DATE: December 6, 2017

SHEET NO.

A2.2BV

JOB NO. 171712A

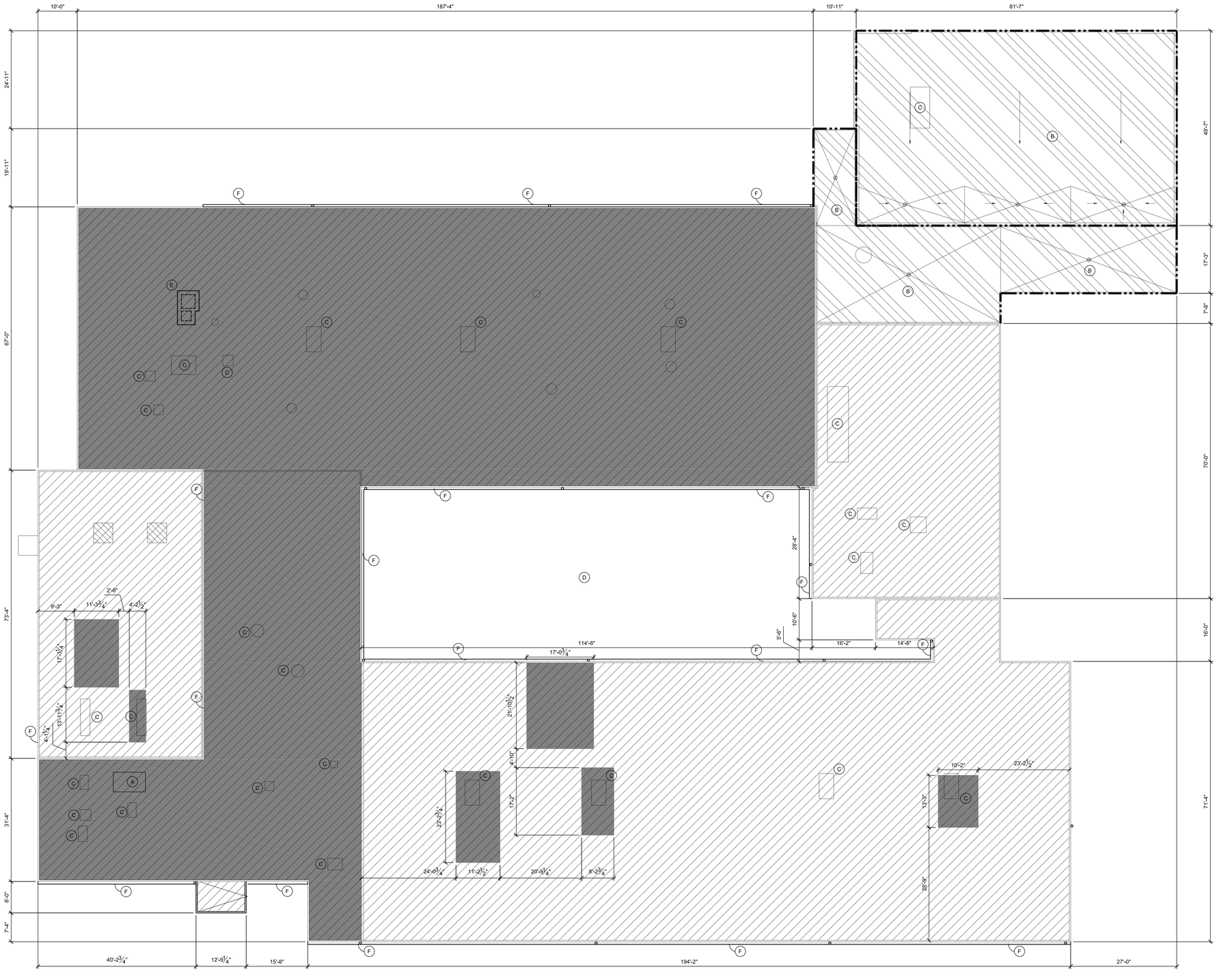

1 - ROOF PLAN

SCALE: 3/32" = 1'-0"

GENERAL NOTES:

1. REFER TO SHEET G4.1 FOR TYPICAL NOTES, SYMBOLS, GENERAL INFORMATION, AND ABBREVIATIONS.
2. REFER TO SHEET G4.2 FOR REFERENCED KEYNOTES.

ROOF PLAN GENERAL NOTES:

1. VERIFY ALL DIMENSIONS IN FIELD AND NOTIFY ARCHITECT OF ANY DISCREPANCIES.
2. VERIFY QUANTITY, SIZE AND LOCATION OF ALL EXISTING ROOF TOP EQUIPMENT, CURBS, FANS, VENTS, ROOF SUMPS, ETC. IN FIELD. PRIOR TO BIDDING. (NOT ALL EXISTING ROOF MOUNTED ITEMS ARE SHOWN ON ROOF PLAN)
3. EXISTING ROOF DECK IS BOTH METAL AND GYPSUM DECK. VERIFY EXTENT OF EACH AREA IN FIELD.

ROOF PLAN LEGEND:

NEW SINGLE PLY ROOF MEMBRANE OVER NEW 1" RIGID INSULATION BOARD OVER EXISTING BUILT-UP ROOF SYSTEM (REMOVE ALL LOOSE BALLAST) REMOVE EXISTING METAL COPING AND PROVIDE NEW METAL COPING ALONG ENTIRE PERIMETER OF ROOF TO MATCH HEIGHT AND PROFILE OF EXISTING COPING (VIF) COLOR TBD.

ALT. BID R-1

NEW SINGLE PLY ROOF MEMBRANE OVER NEW 1" RIGID INSULATION BOARD OVER EXISTING BUILT-UP ROOF SYSTEM (REMOVE ALL LOOSE BALLAST) REMOVE EXISTING METAL COPING AND PROVIDE NEW METAL COPING ALONG ENTIRE PERIMETER OF ROOF TO MATCH HEIGHT AND PROFILE OF EXISTING COPING (VIF) COLOR TBD.

REMOVE EXISTING ROOF SYSTEM & WET INSULATION DOWN TO ROOF DECK & INSTALL NEW RIGID INSULATION (MATCH EXISTING THICKNESS +/-4" VIF) AND SINGLE PLY MEMBRANE ROOF SYSTEM - REFER TO RTA ROOF REPORT FOR ACTUAL DIMENSIONS. REPAIR AND REPLACE GYPSUM DECK AS REQUIRED. LOCATIONS SHOWN ARE APPROXIMATE AND CONTRACTOR MUST VERIFY EXTENT OF WET INSULATION IN FIELD.REFER TO RTA ROOF REPORT FOR ACTUAL DIMENSIONS.

DIRECTION OF SLOPE (V.I.F.)

PROVIDE NEW COPING TO MATCH EXISTING COPING PROFILE AT AREAS TO RECEIVE NEW ROOF. (V.I.F.) INCLUDE IN ALT. BID R-1

ROOF PLAN NOTES:

(A) NEW ROOF TOP EQUIPMENT (SEE MECHANICAL DWGS). AT LOCATIONS WITH EXISTING ROOFING MATERIAL TO REMAIN, CUT & PATCH EXISTING ROOFING AS REQ'D PROVIDE NEW FLASHING, SUPPORT CURBS & NEW STRUCTURAL STEEL ANGLE ROOF FRAMING AS REQ'D - REFER TO SHEET A3.1BV AND STRUCTURAL DRAWINGS.

(B) ALTERNATE R1 - NEW SINGLE PLY ROOF MEMBRANE OVER NEW 1" RIGID INSULATION BOARD OVER EXISTING BUILT-UP ROOF SYSTEM (REMOVE ALL LOOSE BALLAST) REMOVE EXISTING METAL COPING AND PROVIDE NEW METAL COPING ALONG ENTIRE PERIMETER PER BASE BI

(C) EXISTING ROOF TOP EQUIPMENT LOCATIONS SHOWN ARE APPROXIMATE AND CONTRACTOR MUST VERIFY IN FIELD. CONTRACTOR TO FLASH EXISTING EQUIPMENT IN PER APPROPRIATE DETAIL ON SHEET A3.1BV

(D) OPEN COURTYARD

(E) REMOVE EXISTING MASONRY CHIMNEY DOWN TO 3'-0" ABOVE EXISTING ROOF LINE. PROVIDE NEW SOLID CAST STONE TOP TO COVER ENTIRE CHIMNEY (+/- 6'-0" x 10'-0" V.I.F.) SLOPE TOP TO DRAIN. OVERHANG 1" AROUND ALL SIDES WITH DRIP EDGE (TYP.)

(F) REMOVE ANEXISTING GUTTER AND DOWNSPOUT AND INSTALL NEW COMMERCIAL GRADE GUTTERS AND DOWNSPOUTS AROUND ENTIRE BUILDING. SEE DETAILS ON THIS SHEET. MATCH EXISTING LOCATIONS (V.I.F.)

WAKELY ASSOCIATES, INC.
ARCHITECTS

30500 VAN DYKE AVENUE
SUITE M-7
WARREN, MICHIGAN 48093
PH: 586.573.4100
FX: 586.573.0822
www.WakelyAIA.com

FARMINGTON PUBLIC SCHOOLS - 2015 BOND
2018 PROJECTS
KENBROOK & BEECHVIEW ELEMENTARY SCHOOLS

BEECHVIEW ELEMENTARY SCHOOL

COMPOSITE PLAN

PRELIMINARY ☐
DESIGN DEVELOPMENT ☐
CONSTRUCTION ■
FINAL RECORD ☐

DRAWN BY NJL
CHECKED BY BJS

REVISIONS

DATE: December 12, 2017

SHEET NO.
A3.0BV

JOB NO. 171712A

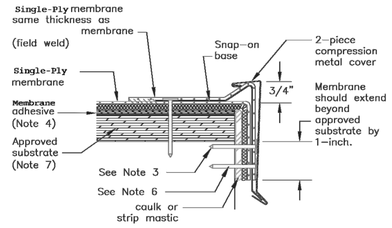

Note 1: This detail is not allowed when roof slope exceeds 2-inch per 12-inch.

Note 2: A wood nailer is required if one or more inches of insulation is used. Top of wood nailer is to be flush with top of insulation. Wood nailer must extend at least 1/2-inch beyond the horizontal edge of the snap-on base.

Note 3: The fasteners used to attach the snap-on base and the membrane to the nailer or into an approved structural surface must be spaced no greater than 6-inches on center. When installing within 10-feet of an outside corner the fastening pattern is 3-inches on center.

Note 4: For approved adhesives refer to the membrane Roofing System specification.

Note 5: Allow for 1/8-inch expansion gap between 10-foot lengths of snap-on base. Overlap the snap-on covers by 2-inches between 10-foot lengths.

Note 6: When installing this detail with a 6 to 13-inch wide metal cover, fasteners must be located within 2-inches of the kick-out.

Note 7: For substrate options see the membrane Roofing System specification.

1 ROOF PARAPET DETAIL

NO SCALE

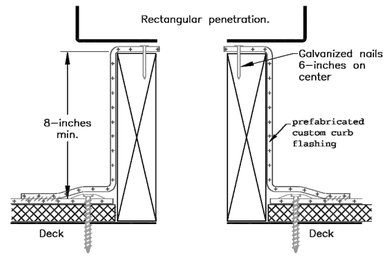

Note:
Perimeter fastening of the deck membrane will be the same fastening pattern as the field membrane, max. 18-inches on center, and no less than one fastener per side.

2 NEW ROOF CURB DETAIL

NO SCALE

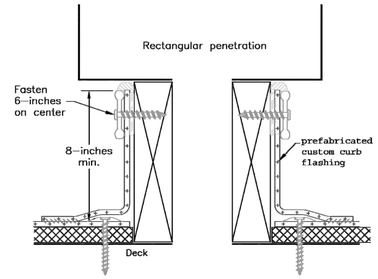

Note 1: Perimeter fastening of the deck membrane will be the same fastening pattern as the field membrane, max. 18-inches on center, and no less than one fastener per side.

Note 2: All termination bar to have a fastener 1-inch max. from each corner.

3 EXISTING ROOF CURB DETAIL

NO SCALE

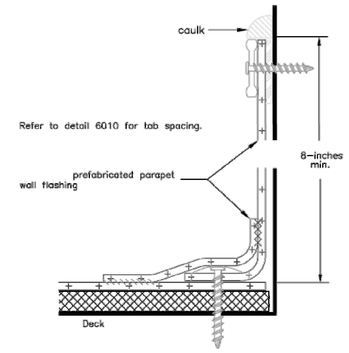

Note 1: Fascia bar and cover may be used in place of the termination bar.

Note 2: The substrate must be free and clear of debris at anc below the termination point.

Note 3: When attaching the parapet flashing to the substrate, t appropriate fastener must be used. The fastener for th wall flashing may be different than the fastener used c the horizontal roof decking.

4 WALL TERMINATION DETAIL

NO SCALE

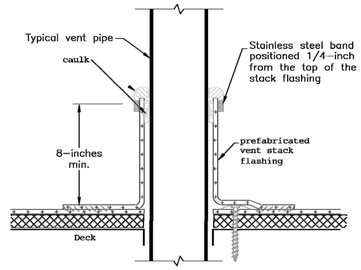

Note 1: If a lead flashingis present on the pipe, it must be removed before a stack flaashingis installed.

Note 2: Membrane attachment around the penetration will be the same as the deck membrane, max. 18-inches on center, and a minimum of one plate/fastner per flashing.

5 VENT STACK/PIPE PENETRATION DETAIL

NO SCALE

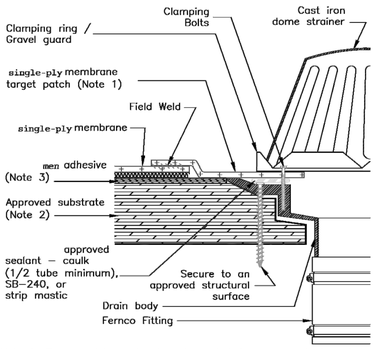

Note 1: Target patch must extend beyond drain sump so that no hot-air welding is done within the sump. If no sump is present the target patch must extend beyond the drain assembly a minimum of 12 inches in all directions. The target patch must be the same mil thickness as the roof memebrane.

Note 2: For substrate options refer to of the membrane Roofing System specification.

Note 3: For approved adhesives refer to of the membrane Roofing System specification.

6 ROOF SUMP DETAIL

NO SCALE

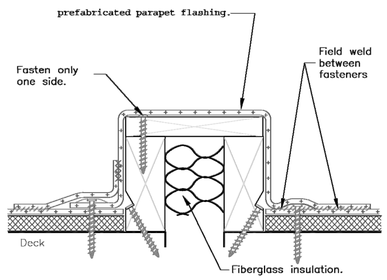

Note 1: Tabs that are parallel to the expansion joint must be mechanically fastened with the same fastening pattern used on the membrane in the field area.

Note 2: Leave the membrane covering the expansion joint loose enough to allow for movement of the building on either side of the joint.

7 ROOF CURB DETAIL

NO SCALE

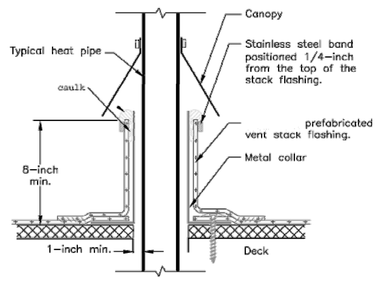

Note 1: Membrane attachment around the penetration will be the same as the deck membrane, max. 18-inches on center, and a minimum one plate/fastener per flashing.

Note 2: This detail required around pipes that exceed 120°F, including all insulated chimney pipes.

Note 3: A minimum of 1-inch air space is required between collar and hot pipes having temperatures greater than 120° F. Position canopy to allow air flow above termination.

8 PIPE DETAIL

NO SCALE

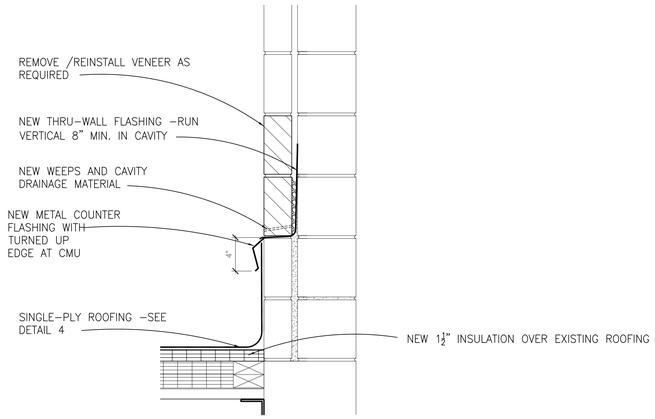

9 SECTION DETAIL AT NEW FLASHING/ WEEPS

SCALE: 1 1/2" = 1'-0"

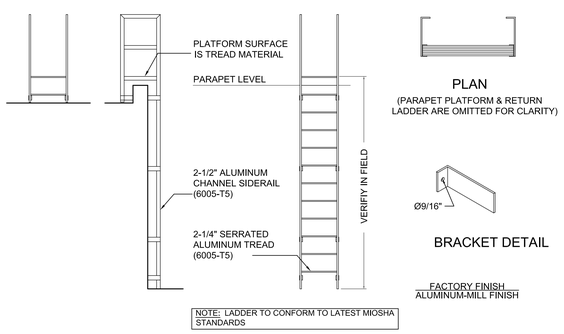

10 ROOF LADDER DETAILS

S C A L E : 1/4" = 1' - 0"

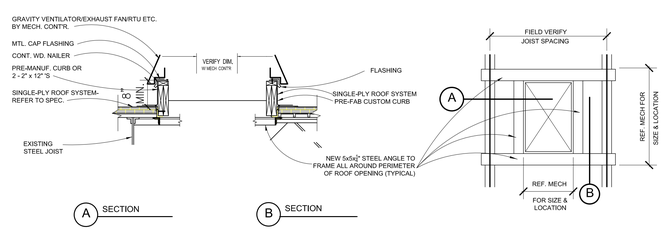

11 TYPICAL ROOF CURB DETAIL

NO SCALE

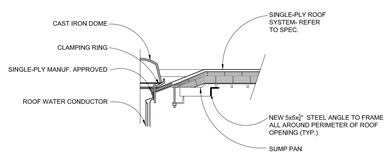

SECTION

12 TYPICAL ROOF SUMP DETAIL

NO SCALE

WA

WAKELY ASSOCIATES, INC.
ARCHITECTS

30500 VAN DYKE AVENUE
SUITE M-7
WARREN, MICHIGAN 48093
PH: 586.573.4100
FX: 586.573.0822
www.WakelyAIA.com

FARMINGTON PUBLIC SCHOOLS - 2015 BOND
2018 PROJECTS
KENBROOK & BEECHVIEW ELEMENTARY SCHOOLS

BEECHVIEW ELEMENTARY

ROOF DETAILS

PRELIMINARY ☐
DESIGN DEVELOPMENT ☐
CONSTRUCTION ☐
FINAL RECORD ■

DRAWN BY NJL
CHECKED BY BJS

REVISIONS

DATE: December 6, 2017

SHEET NO.

A3.1BV

JOB NO. 171712A

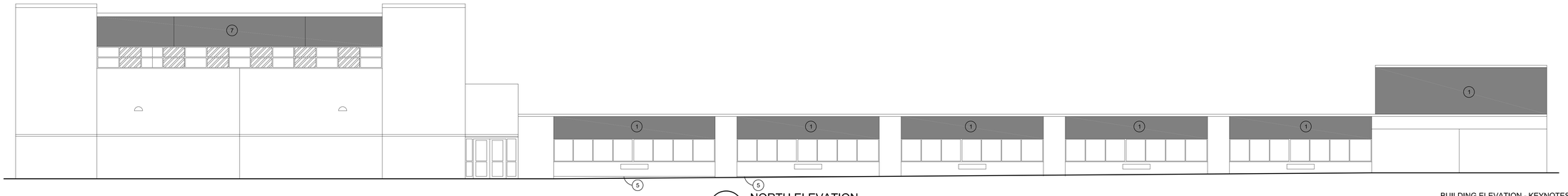

1 A4.0BV NORTH ELEVATION

SCALE: 1/8" = 1'-0"

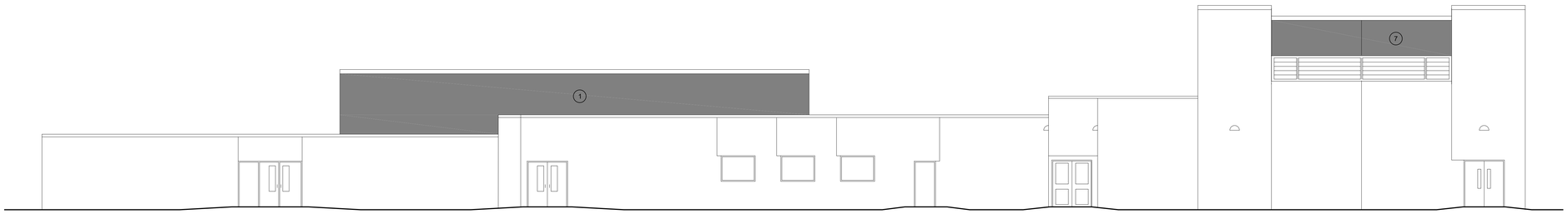

2 A4.0BV EAST ELEVATION

SCALE: 1/8" = 1'-0"

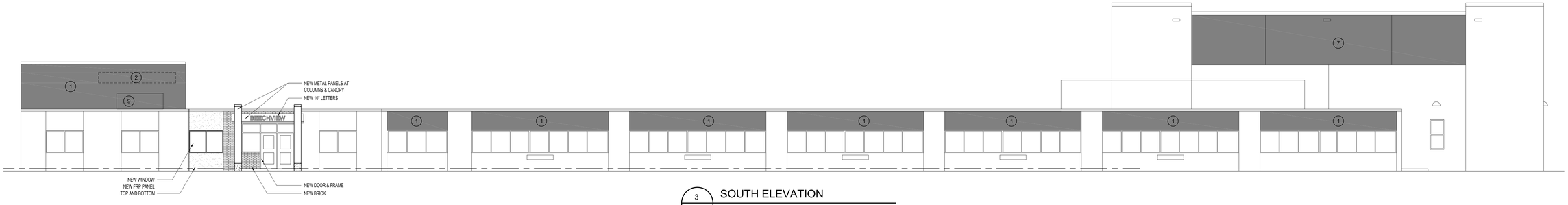

3 A4.0BV SOUTH ELEVATION

SCALE: 1/8" = 1'-0"

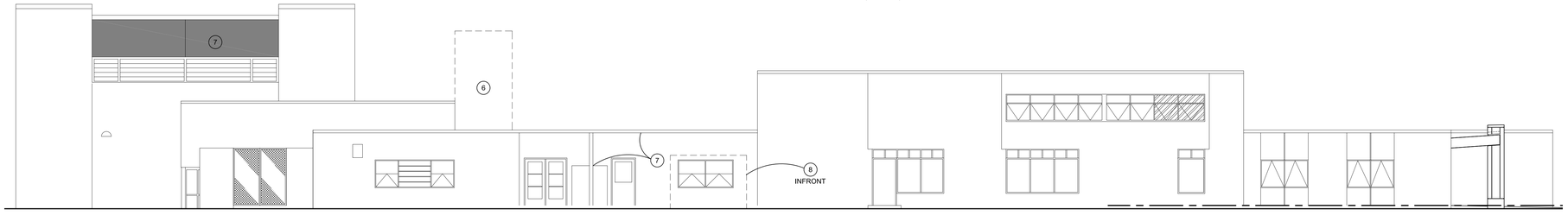

4 A4.0BV WEST ELEVATION

SCALE: 1/8" = 1'-0"

BUILDING ELEVATION - KEYNOTES:

1. INSTALL NEW OMEGA PANELS OVER EXISTING CORRIGATE METAL PANEL.(COLOR TBD). NOT ALL LOCATIONS OF METAL PANELS ARE SHOWN ON ELEVATIONS - V.I.F. ALL SIZES AND DIMENSIONS.
2. EXISTING LETTERS AND NUMERALS TO BE REMOVED. PATCH HOLES IN EXISTING METAL SIDING
3. PROVIDE NEW 1'-0" HIGH PIN MOUNTED CAST ALUMINUM LETTERS AND NUMERALS IN CUSTOM COLOR FASTENED TO EXISTING SIDING. LOCATIONS AND WORDS TBD (35 LETTERS AND 5 NUMERALS)
4. EXISTING STEEL COLUMN TO BE SANDBLASTED DOWN TO STEEL SURFACE. REMOVE ALL RUST AT BASE, ETC AND RE-COATE WITH NEW COATING (COLOR TBD)
5. SCRAPE EXISTING CONCRETE SURFACE, PATCH ANY/ALLL HOLES FLUSH, CAULK ALL CRACKS, RE-COAT W/ NEW COATING (COLOR TBD)
6. TAKE DOWN EXISTING CHIMNEY AND CAP.
7. PREP EIFS, METAL TRIM AND PROVIDE NEW COATING (COLOR TBD)TO MATCH METAL PANELS - V.I.F. ALL SIZES AND DIMENSIONS.
8. PROVIDE NEW PRESSURE TREATED WOOD DUMPSTER SURROUND TO MATCH SIZE AND SCOPE OF EXISTING OF EXCISING METAL POSTS.
9. PROVIDE NEW 3" H SCREEN FOR MECHANICAL UNIT

LEGEND:

EXIST METAL PANEL/EIFS TO GET NEW COATING (COLOR TBD). NOT ALL LOCATIONS ARE SHOWN ON ELEVATIONS - V.I.F. ALL SIZES AND DIMENSIONS.

NOTE: ALL EXTERIOR PAINT TO BE SEMIGLOSS SHEEN REGARDLESS OF OF INDICATION ON COLOR SCHEDULE

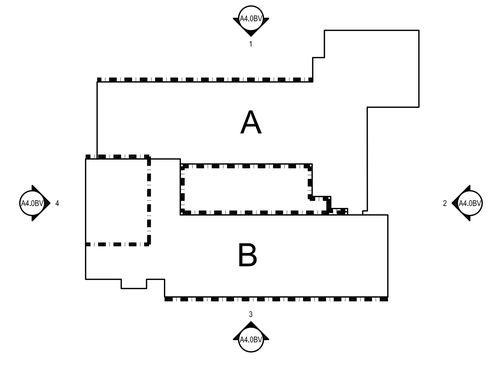

INSTALL NEW OMEGA PANELS OVER EXISTING CORRIGATE METAL PANEL.(COLOR TBD). NOT ALL LOCATIONS OF METAL PANELS ARE SHOWN ON ELEVATIONS - V.I.F. ALL SIZES AND DIMENSIONS. SEE NOTE 1.

KEY PLAN

N.T.S.

WAKELY ASSOCIATES, INC.
ARCHITECTS

30500 VAN DYKE AVENUE
SUITE M-7
WARREN, MICHIGAN 48093
PH: 586.573.4100
FX: 586.573.0822
www.WakelyAIA.com

FARMINGTON PUBLIC SCHOOLS - 2015 BOND
2018 PROJECTS
KENBROOK & BEECHVIEW ELEMENTARY SCHOOLS

BEECHVIEW ELEMENTARY SCHOOL

EXTERIOR ELEVATIONS

PRELIMINARY ☐
DESIGN DEVELOPMENT ☐
CONSTRUCTION ■
FINAL RECORD ☐

DRAWN BY NJL
CHECKED BY BJS

REVISIONS

DATE: December 12, 2017

SHEET NO.

A4.0BV

JOB NO. 171712A

TOILET ACCESSORY LEGEND:

- A — TOILET PARTITION
- B — 36" GRAB BAR
- C — 42" GRAB BAR
- D — 18" VERTICAL GRAB BAR
- E — 36" x 36" MIRROR
- F — URINAL SCREEN
- G — 24" x 36" MIRROR
- H — TOILET PAPER HOLDER (BY OWNER)
- I — SOAP DISPENSOR (BY OWNER)
- J — PAPER TOWEL DISPENSER (BY OWNER)
- K — SANITARY NAPKIN DISPOSAL
- L — MARBLE THRESHOLD

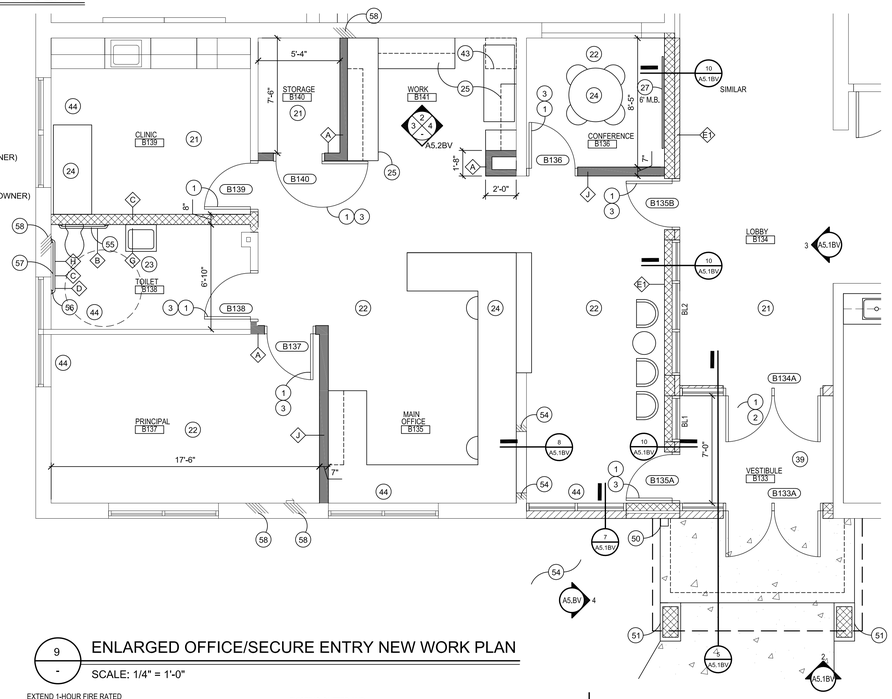

9 / - ENLARGED OFFICE/SECURE ENTRY NEW WORK PLAN
SCALE: 1/4" = 1'-0"

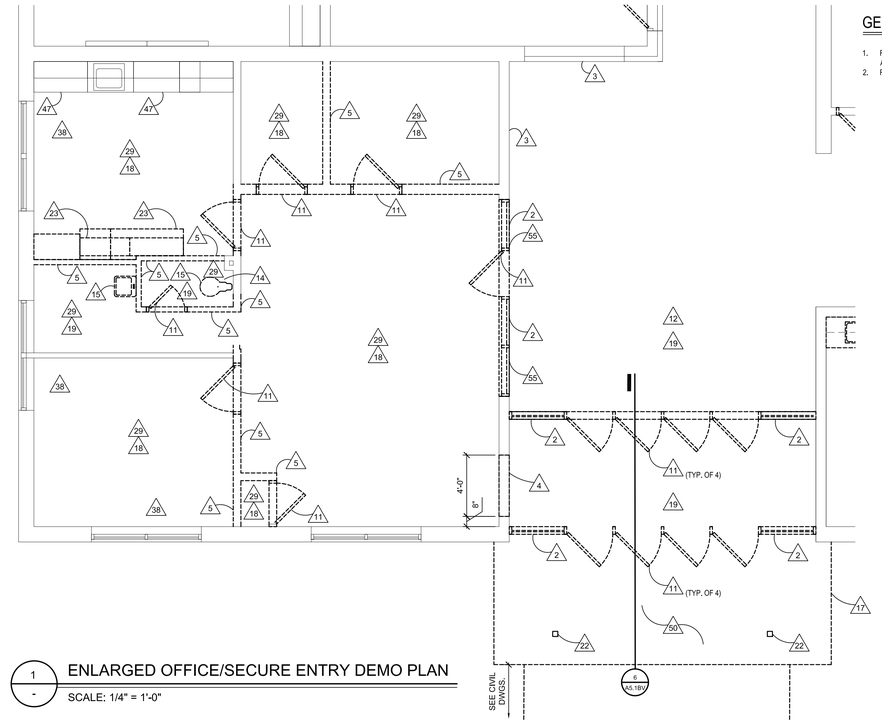

1 / - ENLARGED OFFICE/SECURE ENTRY DEMO PLAN
SCALE: 1/4" = 1'-0"

GENERAL NOTES:

1. REFER TO SHEET G4.1 FOR TYPICAL NOTES, SYMBOLS, GENERAL INFORMATION, AND ABBREVIATIONS.
2. REFER TO SHEET G4.2 FOR REFERENCED KEYNOTES.

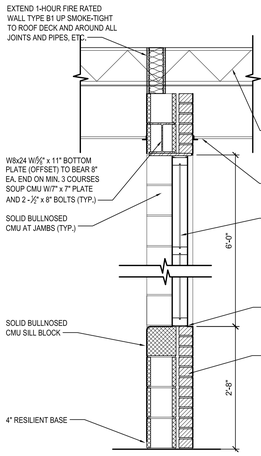

10 / - WALL SECTION @ WALL OPENING
SCALE: 3/4" = 1'-0"

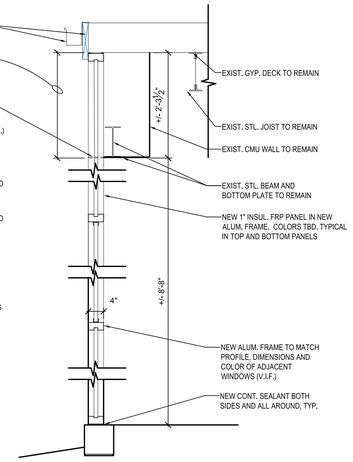

7 / A5.1BV SECTION AT WINDOW
SCALE: 1 1/2" = 1'-0"

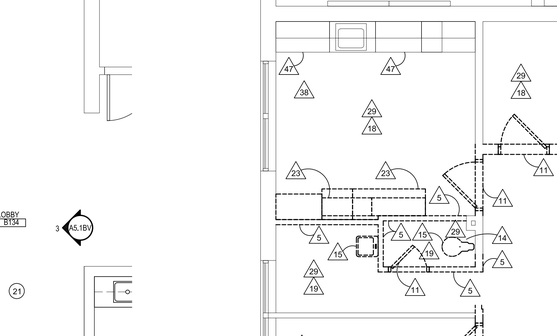

5 / A5.1BV SECTION @ NEW CANOPY
SCALE: 3/4" = 1'-0"

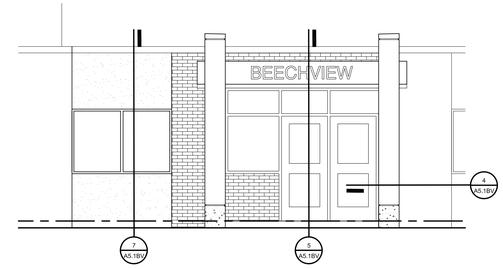

2 / A5.1BV FRONT ELEVATION @ NEW ENTRY
SCALE: 1/4" = 1'-0"

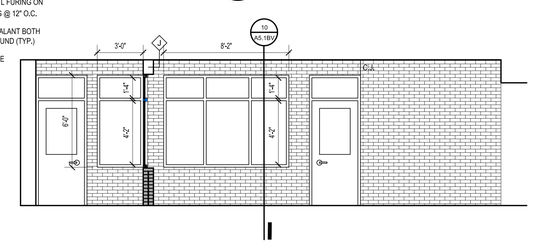

3 / A5.1BV INTERIOR ELEVATION @ NEW ENTRY
SCALE: 1/4" = 1'-0"

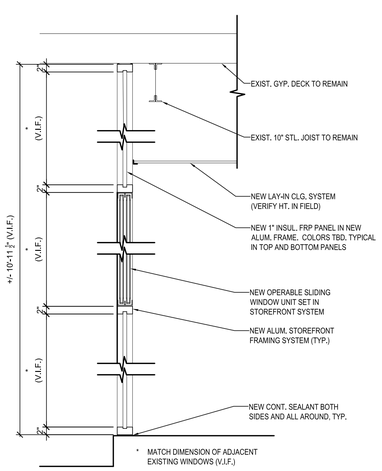

11 / - SECTION AT WINDOW
SCALE: 1/4" = 1'-0"

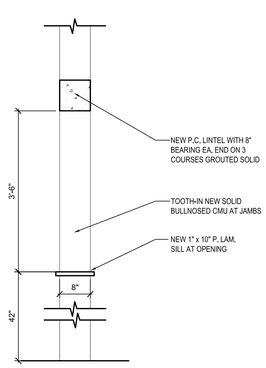

8 / A5.1BV WALL SECTION
SCALE: 1/4" = 1'-0"

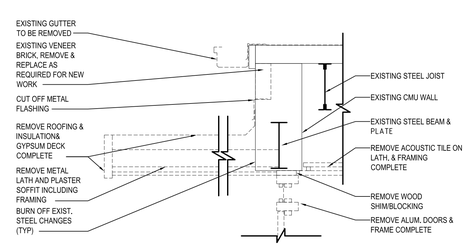

6 / A5.1BV DEMO SECTION @ CANOPY
SCALE: 1/4" = 1'-0"

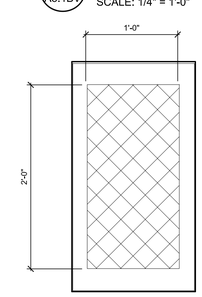

12 / A5.1BV COLUMN DETAIL
SCALE: 1 1/2" = 1'-0"

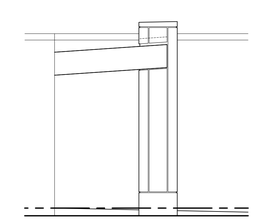

4 / A5.1BV SIDE ELEVATION @ NEW ENTRY
SCALE: 1/4" = 1'-0"

WAKELY ASSOCIATES, INC.
ARCHITECTS

30500 VAN DYKE AVENUE
SUITE M-7
WARREN, MICHIGAN 48093
PH: 586.573.4100
FX: 586.573.0822
www.WakelyAIA.com

FARMINGTON PUBLIC SCHOOLS - 2015 BOND
2018 PROJECTS
KENBROOK & BEECHVIEW ELEMENTARY SCHOOLS

BEECHVIEW ELEMENTARY SCHOOL

COMPOSITE PLAN

PRELIMINARY ☐
DESIGN DEVELOPMENT ☐
CONSTRUCTION ■
FINAL RECORD ☐

DRAWN BY NJL
CHECKED BY BJS

REVISIONS

DATE: December 12, 2017

SHEET NO.
A5.1BV

JOB NO. 171712A

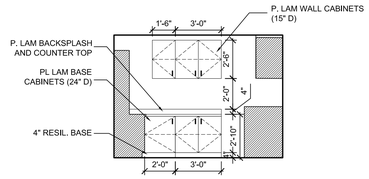

02 / A1.2BV — NEW INTERIOR ELEVATION @ OFFICE

SCALE: 1/4" = 1'-0"

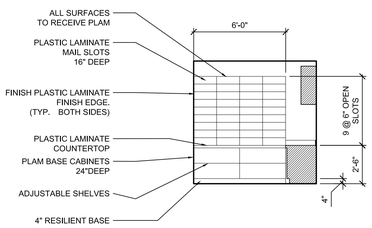

03 / A1.2BV — NEW INTERIOR ELEVATION @ OFFICE

SCALE: 1/4" = 1'-0"

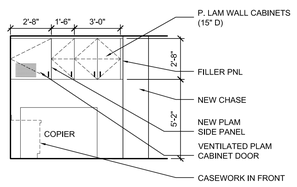

O4 / A1.2BV — NEW INTERIOR ELEVATION @ OFFICE

SCALE: 1/4" = 1'-0"

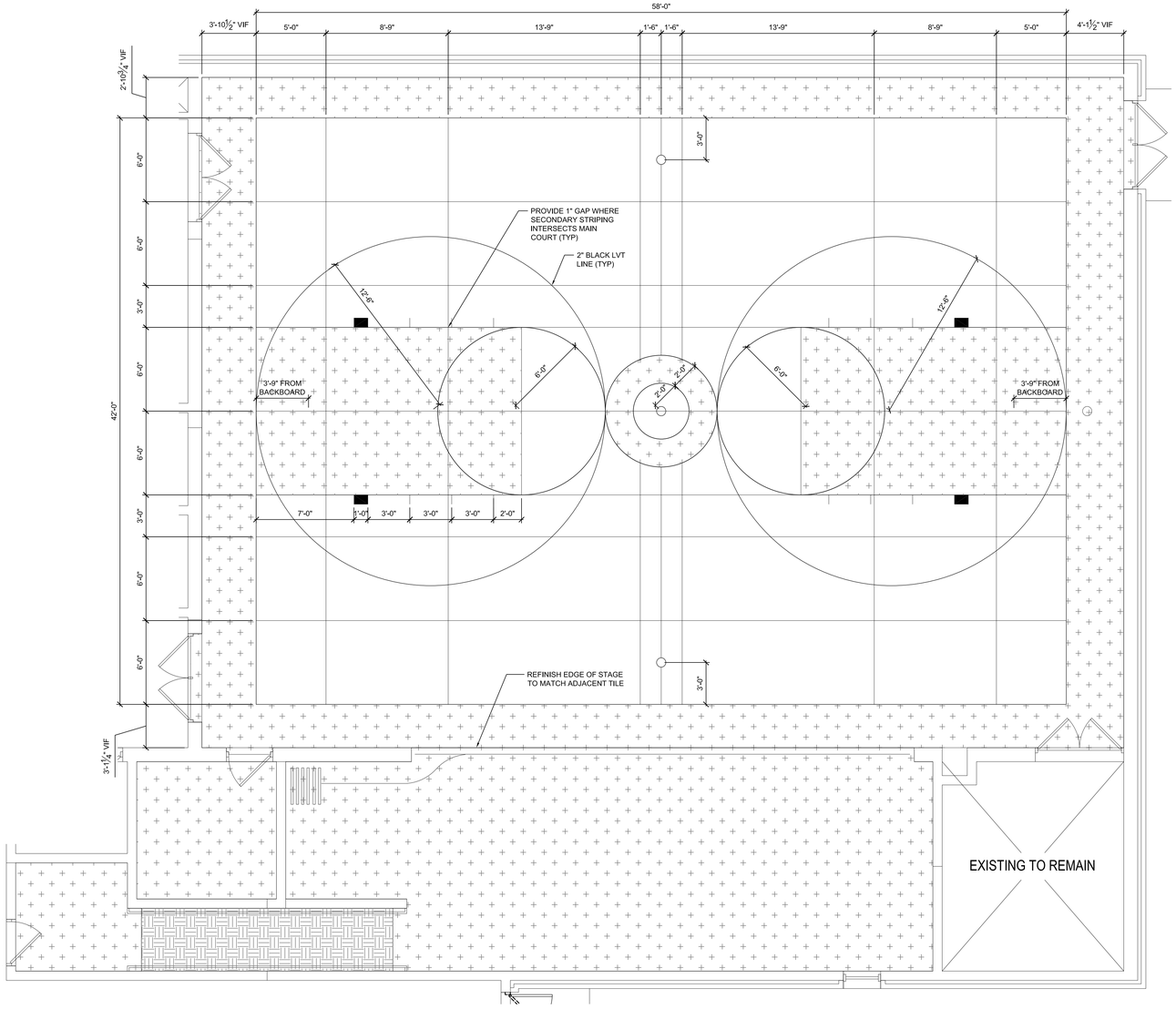

1 / A1.1BV — ENLARGED GYM FLOOR PATTERN PLAN

SCALE: 1/4" = 1'-0"

GENERAL NOTES:

1. REFER TO SHEET G4.1 FOR TYPICAL NOTES, SYMBOLS, GENERAL INFORMATION, AND ABBREVIATIONS.
2. REFER TO SHEET G4.2 FOR REFERENCED KEYNOTES.

TILE FLOORING LEGEND

- LVT TILE COLOR #1 - TBD
- LVT TILE COLOR #2 - TBD
- RUBBER RAMP TREAD
- 2" BLACK LVT LINE CUT INTO FLOOR PATTERN

NOTE: CENTER COURT ON EXISTING BACKBOARD LOCATIONS

WAKELY ASSOCIATES, INC.
ARCHITECTS

30500 VAN DYKE AVENUE
SUITE M-7
WARREN, MICHIGAN 48093
PH: 586.573.4100
FX: 586.573.0822
www.WakelyAIA.com

FARMINGTON PUBLIC SCHOOLS - 2015 BOND
2018 PROJECTS
KENBROOK & BEECHVIEW ELEMENTARY SCHOOLS

BEECHVIEW ELEMENTARY SCHOOL

ENLARGED PLANS & DETAILS

PRELIMINARY ☐
DESIGN DEVELOPMENT ☐
CONSTRUCTION ☐
FINAL RECORD ■

DRAWN BY NJL
CHECKED BY BJS

REVISIONS

DATE: December 6, 2017

SHEET NO.

A5.2BV

JOB NO. 171712A

DOOR SCHEDULE

DOOR OPENING			DOOR			FRAME			DETAILS						
NO.	WIDTH	HEIGHT	TYPE	MATERIAL	FINISH	TYPE	MATERIAL	FINISH	HEAD	JAMB	SILL	THRESHOLD	U.L. LABEL	HARDWARE SET	REMARKS
DOORS															
B133A	(2)3'-0"	7'-0"	G	AL	PFN	7	AL	PFN	-	-	-	AL	-	-	1,2,4,5,3,7,20
B134A	(2)3'-0"	7'-0"	G	AL	PFN	8	AL	PFN	-	-	-	-	-	-	1,2,3,4,6,17,20
B135A	3'-0"	7'-0"	C	WD	STN	6	HM	PT	-	-	-	-	20MIN	-	2,8,5,17
B135B	3'-0"	7'-0"	C	WD	STN	6	HM	PT	-	-	-	-	20MIN	-	2,8,5,17
B136A	3'-0"	7'-0"	C	WD	STN	1	HM	PT	-	-	-	-	-	-	2,5
B137A	3'-0"	7'-0"	G	WD	STN	1	HM	PT	-	-	-	-	-	-	2,5
B138A	3'-0"	7'-0"	F	WD	STN	1	HM	PT	-	-	-	MAR	-	-	1,15
B139A	3'-0"	7'-0"	G	WD	STN	1	HM	PT	-	-	-	-	-	-	1,6
B140A	3'-0"	7'-0"	F	WD	STN	1	HM	PT	-	-	-	-	-	-	2,17
B142A	(2)3'-0"	7'-0"	E	WD	STN	ETR	ETR	PT	-	-	-	-	20MIN	-	12
B143A	3'-0"	7'-0"	J	WD	STN	1	HM	PT	-	-	-	-	60MIN	-	2,5,8
B144A	3'-0"(2)	7'-0"	J	WD	STN	-	-	-	-	-	-	-	20MIN	-	12,8
B144B	3'-0"(2)	7'-0"	J	WD	STN	-	-	-	-	-	-	-	20MIN	-	12,8
B145A	3'-0"	7'-0"	E	WD	STN	ETR	ETR	PT	-	-	-	-	20MIN	-	12
B146A	3'-0"	7'-0"	E	WD	STN	ETR	ETR	PT	-	-	-	-	20MIN	-	12
B147A	3'-0"	7'-0"	J	WD	STN	1	HM	PT	-	-	-	-	20MIN	-	2,5,8,17
B148B	3'-0"	7'-0"	F	WD	STN	1	HM	PT	-	-	-	-	-	-	2,5,8,17
B149A	3'-0"	7'-0"	J	WD	STN	1	HM	PT	-	-	-	-	20MIN	-	2,5,8,17
B151A	3'-4"	7'-0"	C	FRP	PFN	1	AL	PT	-	-	-	-	20MIN	-	-
-	-	-	-	-	-	-	-	-	-	-	-	-	-	-	-
B154A	3'-0"	7'-0"	J	WD	STN	1	HM	PT	-	-	-	-	-	-	-
B155A	3'-0"	7'-0"	J	WD	STN	1	HM	PT	-	-	-	-	-	-	-
B156A	3'-0"	7'-0"	F	WD	STN	1	HM	PT	-	-	-	-	-	-	2,13

REMARKS: (NOTE: NOT ALL REMARKS LISTED ARE USED)

1. EXISTING WOOD DOOR AND H.M. FRAME TO REMAIN - PREP DOOR AS NEEDED TO ACCEPT NEW HARDWARE
2. REMOVE & REPLACE EXIST DOOR AND FRAME - SEE SCHEDULE
3. PROVIDE ADA AUTOMATIC OPENER @ 1 LEAF
4. PROVIDE KEYED REMOVABLE MULLION ON CENTER MULLION
5. VERIFY MASONRY OPENING IN FIELD PRIOR TO FABRICATION OF NEW DOOR & FRAME.
6. PROVIDE $\frac{1}{4}$" LAM. GLASS IN ALL DOOR AND FRAME OPENINGS.
7. PROVIDE 1" LAM. GLASS IN DOOR AND INSUL. LAM. GLASS IN FRAME OPENINGS
8. PROVIDE FIRE RATED GLASS IN DOOR AND FRAME OPENINGS. SEE SPEC.
9. DISCONNECT ALARM SYSTEM TO REPLACE DOOR/ FRAME AND RECONNECT AS REQUIRED WHEN NEW DOOR/ FRAME IS IN PLACE.
10. DOORS AND FRAME TO REMAIN. CHANGE HARDWARE AS SPEC'D. MODIFY DOORS & FRAMES AS REQ'D FOR NEW HARDWARE REQUIREMENTS.
11. PROVIDE 20 MIN RATED GLASS IN DOOR AND 45 MIN RATED GLASS IN FRAME / TRANSOM PANEL.
12. REMOVE EXIST. DOOR AND HARDWARE AND REPLACE WITH NEW DOOR AND HARDWARE. VERIFY FRAME OPENING/DOOR SIZE IN FIELD PRIOR TO ORDERING NEW DOOR. FRAME TO BE PAINTED.
13. NEW DOOR AND FRAME.
14. SEE ELEVATIONS FOR FRAME TYPE.
15. REMOVE / REPLACE MARBLE THRESHOLD WITH NEW.
16. PROVIDE SOUND SEALS ON ALL SIDES OF NEW WOOD DOOR.
17. PROVIDE NEW ALUM. INSERT FRAME WITH CLEAR ANODIZED FINISH TO FIT INSIDE EXISTING FRAMED DOOR OPENING. REMOVE STOPS, REWORK FRAME AS REQ'D TO REVERSE SWING.
18. NEW TOTAL DOORS SYSTEM - SEE SPEC.
19. PROVIDE CUSTOM ALUMINUM FRAME COLOR TO MATCH COLOR OF EXISTING WINDOW (VIF)
20. PROVIDE NEW LOCKING HARDWARE TO CREATE SECURE ENTRY VESTIBULE
21. PROVIDE ALUM. STOREFRONT FULL HT AT THIS LOCATION. SEE ELEVATIONS.
22. PRP NEW FRAME FOR STRIKE RELEASE HARDWARE.
23. PROVIDE 1" LAMINATE GLASS IN ALL DOOR OPENINGS.

ABBREVIATIONS

AL	ALUMINUM
ETR	EXISTING TO REMAIN
FRP	FIBERGLASS REINFORCED POLYESTER
HM	HOLLOW METAL
MAR	SYNTHETIC MARBLE THRESHOLD
PFN	PRE FINISHED BY MANUFACTURER
PTD	PAINTED
WD	WOOD
STL	STEEL
STN	STAINED
TG	TEMPERED GLASS
GL	GLASS

NOTES: (APPLIES TO ALL DOORS)

A. VERIFY ALL DOOR OPENINGS AND MASONRY FRAME OPENINGS IN FIELD PRIOR TO FABRICATION OF NEW.
B. ALL NEW FRP DOORS AND ALUMINUM FRAMES TO RECEIVE MANUFACTURER FINISH.REFER TO SPECIFICATIONS FOR HARDWARE SETS.
C. ALL NEW WOOD DOORS CALLING FOR STAIN TO BE FACTORY STAINED AND SEALED ON ALL SURFACES AND SIDES AND ENDS. DO NOT LEAVE RAW WOOD ON ENDS EXPOSED.

FRAME ELEVATIONS:

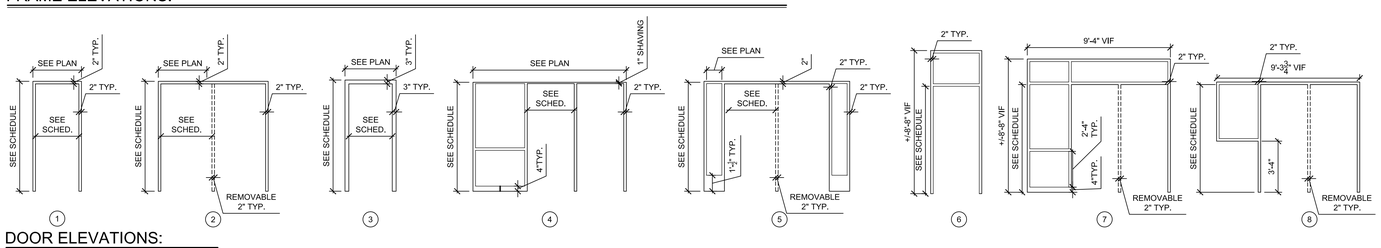

DOOR ELEVATIONS:

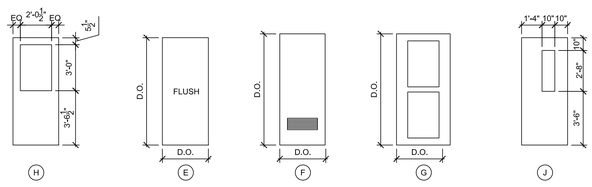

DOOR SCHEDULE

DOOR OPENING			DOOR			FRAME			DETAILS						
NO.	WIDTH	HEIGHT	TYPE	MATERIAL	FINISH	TYPE	MATERIAL	FINISH	HEAD	JAMB	SILL	THRESHOLD	U.L. LABEL	HARDWARE SET	REMARKS
DOORS															
A100A	3'-0"	7'-0"	ETR	ETR	PT	ETR	ETR	PT	-	-	-	-	-	-	-
A100B	3'-0"	7'-0"	J	FRP	PFN	3	ALUM	PFN	-	-	-	AL	-	-	2,5,9
A101A	3'-4"	7'-0"	J	FRP	PFN	1	ALUM	PFN	-	-	-	AL	-	-	2,5,9
A102A	3'-4"	7'-0"	E	WD	STN	1	ETR	PT	-	-	-	-	-	-	2,12
A103A	3'-0"	7'-0"	ETR	ETR	PT	ETR	ETR	PT	-	-	-	-	60MIN	-	-
A105A	3'-0"	7'-0"	J	WD	STN	1	HM	PT	-	-	-	-	20MIN	-	2,5,8,13
A105B	3'-0"	7'-0"	E	WD	STN	1	HM	PT	-	-	-	-	-	-	2,5,13
A106A	2'-6"	7'-0"	F	WD	STN	1	HM	PT	-	-	-	-	-	-	2,5,13
A107A	2'-6"	7'-0"	F	WD	STN	1	HM	PT	-	-	-	-	-	-	2,5,13
A108A	3'-0"	7'-0"	E	WD	STN	1	HM	PT	-	-	-	-	-	-	2,5,13
A109A	3'-0"	7'-0"	J	WD	STN	1	HM	PT	-	-	-	-	20MIN	-	2,5,8,13
A110A	3'-0"	7'-0"	F	WD	STN	1	HM	PT	-	-	-	-	-	-	2,5,13
A111A	3'-0"	7'-0"	J	WD	STN	1	HM	PT	-	-	-	-	20MIN	-	2,5,8,13
A112A	3'-0"	6'-10"	J	WD	STN	ETR	ETR	ETR	-	-	-	-	20MIN	-	8,12
A112B	3'-0"	6'-10"	E	FRP	PFN	ETR	ETR	ETR	-	-	-	-	-	-	12
-	-	-	-	-	-	-	-	-	-	-	-	-	-	-	-
A114A	3'-0"	7'-0"	J	WD	STN	1	HM	PT	-	-	-	-	20MIN	-	2,5,8,13
A115A	2'-6"	7'-0"	F	WD	STN	1	HM	PT	-	-	-	-	-	-	2,5,13
A116A	2'-6"	7'-0"	F	WD	STN	1	HM	PT	-	-	-	-	-	-	2,5,13
A117A	3'-0"	7'-0"	F	WD	STN	1	HM	PT	-	-	-	-	-	-	2,5,13
A118A	3'-0"	7'-0"	J	WD	STN	1	HM	PT	-	-	-	-	20MIN	-	2,5,8,13
A119A	3'-0"	7'-0"	F	WD	STN	1	HM	PT	-	-	-	-	-	-	2,5,13
A120A	3'-0"	7'-0"	F	WD	STN	1	HM	PT	-	-	-	-	-	-	2,5,13
A121A	2'-6"	7'-0"	F	WD	STN	1	HM	PT	-	-	-	-	-	-	2,5,13
-	-	-	-	-	-	-	-	-	-	-	-	-	-	-	-
A122A	2'-6"	7'-0"	F	WD	STN	1	HM	PT	-	-	-	-	-	-	2,5,13
A123A	3'-0"	7'-0"	J	WD	STN	1	HM	PT	-	-	-	-	20MIN	-	2,5,8,13
A124A	3'-0"	7'-0"	J	WD	STN	1	HM	PT	-	-	-	-	20MIN	-	2,5,8,13
A125A	3'-0"	7'-0"	F	WD	STN	1	HM	PT	-	-	-	-	-	-	2,5,13
A126A	3'-0"	7'-0"	J	WD	STN	1	HM	PT	-	-	-	-	20MIN	-	2,5,8,13
A127A	3'-0"	7'-0"	F	WD	STN	1	HM	PT	-	-	-	-	-	-	2,5,13
A128A	2'-6"	7'-0"	F	WD	STN	1	HM	PT	-	-	-	-	-	-	2,5,13
A129A	3'-0"	7'-0"	F	WD	STN	1	HM	PT	-	-	-	-	-	-	2,5,13
A130A	3'-0"	7'-0"	J	WD	STN	1	HM	PT	-	-	-	-	20MIN	-	2,5,8,13
A131A	3'-0"	7'-0"	F	WD	STN	1	HM	PT	-	-	-	-	-	-	2,5,13
A132A	2'-6"	7'-0"	F	WD	STN	1	HM	PT	-	-	-	-	-	-	2,5,13
A133A	3'-0"	7'-0"	F	WD	STN	1	HM	PT	-	-	-	-	-	-	2,5,13
A134A	3'-0"(2)	7'-0"	C	FRP	PFN	1	AL	PT	-	-	-	-	-	-	2,5,13
A137A	(2)3'-0"	7'-0"	E	FRP	PFN	2	AL	PFN	-	-	-	-	-	-	2,5,13,4
A145B	3'-0"	7'-0"	F	WD	STN	ETR	ETR	PT	-	-	-	-	-	-	12
A146A	(2)3'-0"	7'-0"	J	WD	STN	ETR	ETR	PT	-	-	-	-	20MIN	-	8,12
A146B	(2)3'-0"	7'-0"	J	WD	STN	ETR	ETR	PT	-	-	-	-	20MIN	-	4,8,12
A147A	3'-0"	7'-0"	F	WD	STN	ETR	ETR	PT	-	-	-	-	-	-	12
A148A	3'-0"	7'-0"	J	WD	STN	ETR	ETR	PT	-	-	-	-	-	-	12
A149A	3'-0"	7'-0"	J	WD	STN	ETR	ETR	PT	-	-	-	-	-	-	12
A150A	3'-0"(2)	7'-0"	D	FRP	PFN	2	AL	PFN	-	-	-	-	-	-	2,4,9,13
A150B	3'-0"	7'-0"	F	FRP	PFN	3	AL	PFN	-	-	-	-	-	-	2,4,9,13
A151A	3'-0"	7'-0"	E	WD	STN	ETR	ETR	ETR	-	-	-	-	20MIN	-	12
A152A	3'-0"	7'-0"	E	WD	STN	ETR	ETR	ETR	-	-	-	-	20MIN	-	12
A153A	3'-0"	7'-0"	G	WD	STN	3	HM	PT	-	-	-	-	20MIN	-	2,4,8,13
A154A	3'-0"(2)	7'-0"	H	FRP	PFN	2	AL	PFN	-	-	-	-	-	-	2,5,9
A154B	3'-0"(2)	7'-0"	H	FRP	PFN	3	HM	PT	-	-	-	-	-	-	2,4,13
A154A	3'-0"	7'-0"	E	WD	PFN	1	HM	PFN	-	-	-	-	45MIN	-	12
-	-	-	-	-	-	-	-	-	-	-	-	-	-	-	-
-	-	-	-	-	-	-	-	-	-	-	-	-	-	-	-
B101A	-	-	ETR	ETR	PT	ETR	ETR	PT	-	-	-	-	-	-	-
B102A	3'-0"	7'-0"	G	WD	STN	ETR	ETR	PT	-	-	-	-	20MIN	-	12,8
B103A	3'-0"	7'-0"	J	WD	STN	1	HM	PT	-	-	-	-	20MIN	-	12,8
B104A	3'-0"(2)	7'-0"	J	FRP	PFN	4	AL	PFN	-	-	-	-	-	-	2,5,13
B104B	3'-0"(2)	7'-0"	J	WD	PFN	ETR	ETR	PT	-	-	-	-	-	-	12
B106A	3'-0"	7'-0"	J	WD	STN	1	HM	PT	-	-	-	-	20MIN	-	2,5,13
B107A	3'-0"	7'-0"	F	WD	STN	1	HM	PT	-	-	-	-	-	-	2,13
B108A	3'-0"	7'-0"	J	WD	STN	1	HM	PT	-	-	-	-	20MIN	-	2,5,13,8
B109A	3'-0"	7'-0"	F	WD	STN	1	HM	PT	-	-	-	-	-	-	2,13
B110A	3'-0"	7'-0"	J	WD	STN	1	HM	PT	-	-	-	-	-	-	2,5,13
B110B	3'-0"	7'-0"	J	WD	STN	1	HM	PT	-	-	-	-	20MIN	-	2,5,13,8
B111A	3'-0"	7'-0"	F	WD	STN	1	HM	PT	-	-	-	-	-	-	2,13
B112A	3'-0"	7'-0"	J	WD	STN	1	HM	PT	-	-	-	-	20MIN	-	2,5,13,8
B113A	3'-0"	7'-0"	F	WD	STN	1	HM	PT	-	-	-	-	-	-	2,13
B114A	3'-0"	7'-0"	J	WD	STN	1	HM	PT	-	-	-	-	20MIN	-	2,5,13,8
B115A	3'-0"	7'-0"	F	WD	STN	1	HM	PT	-	-	-	-	-	-	2,13
B116A	3'-0"	7'-0"	J	WD	STN	1	HM	PT	-	-	-	-	20MIN	-	2,5,13,8
B117A	3'-0"	7'-0"	F	WD	STN	1	HM	PT	-	-	-	-	-	-	2,13
B118A	3'-0"	7'-0"	J	WD	STN	1	HM	PT	-	-	-	-	20MIN	-	2,5,13,8
B119A	3'-0"	7'-0"	F	WD	STN	1	HM	PT	-	-	-	-	-	-	2,13
B121A	3'-0"	7'-0"	F	WD	STN	1	HM	PT	-	-	-	-	-	-	2,13
B122A	3'-0"	7'-0"	J	WD	STN	1	HM	PT	-	-	-	-	20MIN	-	2,5,13,8
B123A	3'-0"	7'-0"	F	WD	STN	1	HM	PT	-	-	-	-	-	-	2,5,13
B125A	3'-0"	7'-0"	F	WD	STN	1	HM	PT	-	-	-	-	-	-	2,5,13
B127A	3'-0"	7'-0"	J	WD	STN	1	HM	PT	-	-	-	-	20MIN	-	2,5,13,8
B128A	3'-0"	7'-0"	E	WD	STN	1	HM	PT	-	-	-	-	20MIN	-	2,5,13
B129A	3'-0"	7'-0"	E	WD	STN	1	HM	PT	-	-	-	-	45MIN	-	2,5,13
B130A	3'-0"	7'-0"	E	WD	STN	1	HM	PT	-	-	-	-	20MIN	-	2,5,13
B131A	3'-0"	7'-0"	J	WD	STN	1	HM	PT	-	-	-	-	20MIN	-	2,5,13,8
B132A	3'-0"	7'-0"	F	WD	STN	1	HM	PT	-	-	-	-	-	-	2,5,13

WAKELY ASSOCIATES, INC.
ARCHITECTS

30500 VAN DYKE AVENUE
SUITE M-7
WARREN, MICHIGAN 48093
PH: 586.573.4100
FX: 586.573.0822
www.WakelyAIA.com

FARMINGTON PUBLIC SCHOOLS - 2015 BOND
2018 PROJECTS
KENBROOK & BEECHVIEW ELEMENTARY SCHOOLS

BEECHVIEW ELEMENTARY SHCOOL

DOOR SCHEDULE & DETAILS

PRELIMINARY ☐
DESIGN DEVELOPMENT ☐
CONSTRUCTION ■
FINAL RECORD ☐

DRAWN BY NJL
CHECKED BY BJS

REVISIONS

DATE: December 12, 2017

SHEET NO.
A7.1BV

JOB NO. 171712A

ROOM FINISH SCHEDULE ABBREVIATIONS:

ACT	ACOUSTICAL CEILING TILE IN NEW METAL GRID	PT	PAINT
ACT/PAD	NEW ACOUSTIC TILE IN EXIST. METAL GRID	RB	4" RESILIENT COVE BASE
BR	BRICK	RTR	RUBBER TREADS AND RISERS
CMU	CONCRETE MASONRY UNIT	SC	SEALED CONCRETE
CPT	CARPET	TEC	2'-0" x 2'-0" TECTUM IN GRID SYSTEM
EPT	EPOXY PAINT	LVT	LUXURY VINYL TILE FLOOR
ETR	EXISTING TO REMAIN	VACT	VINYL FACED ACT
EXP	EXPOSED CONSTRUCTION	VB	VENTED BASE
GB	GYPSUM BOARD	WC	WALK-OFF CARPET
PCT	PORCELAIN CERAMIC TILE	WD	WOOD
4PCT	4" PORCELAIN CERAMIC TILE COVE BASE	AF	ACCESS FLOORING

ROOM FINISH SCHEDULE REMARKS:

1. PROVIDE MARKER BD. PAINT ON WALLS - FULL HEIGHT AND WIDTH.
2. NEW CEILING TO BE PLACED AT SAME HEIGHT AS EXISTING (VIF).
3. SEE FLOOR PLANS FOR EXTENT OF NEW FLOORING & PATTERNS.
4. MULTIPLE WALL PAINT COLORS & PATTERNS WILL BE USED IN THIS ROOM.
5. MULTIPLE COLORS WILL BE USED ON EXPOSED ROOF DECK, FRAMING, DUCTWORK, ETC.
6. SEE ELEVATIONS AND NOTES FOR HEIGHT OF WALL TILE. PAINT CMU WALL ABOVE TILE (VERIFY EACH ROOM DIMENSION IN FIELD).
7. SEE ELEVATIONS AND DETAILS FOR SOFFITS / WALL MATERIALS TO BE PAINTED.
8. REMOVE WALL COVERING, SKIM COAT WALLS, SAND AND PREP FOR NEW PAINT AS REQUIRED.
9. NOT USED
10. PROVIDE GYM FLOOR STRIPING AS DETAILED ON ENLARGED PLANS.
11. PAINT WALLS UP TO CEILING LINE (+/-10'-0" A.F.F. VIF)
12. PROVIDE OVAL IN CARPET, SEE DETAIL.

ROOM FINISH SCHEDULE GENERAL NOTES (APPLIES TO ALL ROOMS):

1. PAINT ALL EXPOSED ITEMS IN ROOMS: DOOR FRAMES, WINDOW FRAMES, DUCTS, PIPES, CONDUITS, ROOF FRAMING, ROOF DECK, ETC.
2. SEE ELEVATIONS & DETAILS FOR GYP BD SOFFIT HEIGHTS & SIZES.
3. SEE ELEVATIONS & DETAILS FOR WALL TILE HEIGHTS & LOCATIONS
4. SEE PLANS FOR FLOOR PATTERNS AND WALK-OFF CARPET LOCATIONS
5. PROVIDE VINYL TRANSITION STRIPS AT DISSIMILAR FLOOR FINISHES - CARPET / TILE, CARPET / CONCRETE, ETC.
6. PAINT NEW WALL CONSTRUCTION TO MATCH EXISTING IN ROOM (VIF)
7. PROVIDE STAINLESS STEEL SCHLUTER TRANSITIONS AT ALL HARD TILE / CARPET LOCATIONS.
8. MODIFY EXISTING LAY-IN CEILINGS AS REQUIRED TO ACCOMMODATE NEW WALL PLACEMENT.
9. REMOVE / REINSTALL EXISTING LAY-IN CEILING SYSTEMS AS REQUIRED FOR OVERHEAD PIPING, DUCT WORK, ETC (VIF).
10. VERIFY WITH EACH SCHOOL PRINCIPAL **BEFORE PAINTING OVER** TOP OF EXISTING PAINTED MURALS IN CORRIDORS AND CLASSROOMS.
11. ALL TOILET ROOMS CALLING FOR PAINT TO BE EPOXY PAINT (WALLS & CEILINGS).

ROOM FINISH SCHEDULE

NO.	ROOM NAME	FLOOR	BASE	WALLS	CEILING MATERIAL	CEILING HGT.	REMARKS
B135	EXISTING MAIN OFFICE	CPT	RB	BR/GB-PT	ACT	+/-9'-6"(VIF)	-
B136	NEW CONFERENCE ROOM	CPT	RB	CMU/BR/ETR	ACT	9'-0"	-
B137	EXISTING OFFICE	CPT	RB	GB/CMU/PT	ACT	9'-0"	-
B138	NEW TOILET	PCT	4PCT	GB/CMU/EPT	ACT	9'-0"	-
B139	NEW CLINIC	LVT	RB	GB/CMU/PT	ACT	9'-0"	-
B140	NEW STORAGE	CPT	RB	PT	ACT	-	-
B141	NEW WORK ROOM	CPT	RB	PT	ACT	-	-
B142	EXISTING PTA STORAGE	ETR	ETR	ETR	ETR	-	-
B143	EXIST. CONFERENCE ROOM	CPT	RB	PT	ETR	-	-
B144	EXISTING CAFETERIA	LVT	RB	PT	ACT/PAD	+/-10'-0"(VIF)	3,4,11
B145	EXISTING TOILET	PCT	4PCT	EPT	EPT	+/-8'-0"(VIF)	-
B146	EXISTING TOILET	PCT	4PCT	EPT	EPT	+/-8'-0"(VIF)	-
B147	EXIST. TEACHERS LOUNGE	CPT/LVT	RB	PT	ACT/PAD	-	-
B148	EXISTING CLOSET	CPT	RB	ETR	ETR	-	-
B149	EXISTING MUSIC	CPT	RB	PT	ACT/PAD	+/-9'-2"(VIF)	12
B150	EXISTING CORRIDOR	LVT	RB	PT	ACT	-	-
B151	EXISTING STORAGE	ETR	ETR	ETR	ETR	-	-
B152	EXISTING SERVERY	ETR	ETR	ETR	ETR	-	-
B154	EXISTING CLASSROOM	LVT	RB	PT	ACT/PAD	+/-9'-2"(VIF)	-
B155	EXISTING CLASSROOM	LVT	RB	PT	ACT/PAD	+/-9'-2"(VIF)	-
B172	EXISTING CLASSROOM	LVT	RB	PT	ACT/PAD	+/-9'-2"(VIF)	-
B176	EXISTING CLASSROOM	LVT	RB	PT	ACT/PAD	+/-9'-2"(VIF)	-
-	-	-	-	-	-	-	-
-	-	-	-	-	-	-	-
-	-	-	-	-	-	-	-

ROOM FINISH SCHEDULE

NO.	ROOM NAME	FLOOR	BASE	WALLS	CEILING MATERIAL	CEILING HGT.	REMARKS
A100	EXISTING BOILER	ETR	ETR	ETR	ETR	-	-
A101	EXISTING KITCHEN	ETR	ETR	ETR	ETR	-	-
A102	EXISTING STORAGE	ETR	ETR	ETR	ETR	-	-
A103	EXISTING OFFICE	ETR	ETR	ETR	ETR	-	-
A104	EXISTING CORRIDOR	LVT	RB	PT	ACT	+/-7'-11"(VIF)	2,3,4
A105	EXISTING CLASSROOM	LVT	RB	PT	ACT/PAD	+/-9'-2"(VIF)	-
A106	EXISTING TOILET	PCT	4PCT	PT	ETR/PT	+/-8'-0"(VIF)	-
A107	EXISTING TOILET	PCT	4PCT	PT	ETR/PT	+/-8'-0"(VIF)	-
A108	EXISTING CLOSET	LVT	RB	ETR	ETR	-	-
A109	EXISTING CLASSROOM	LVT	RB	PT	ACT/PAD	+/-9'-2"(VIF)	-
A110	EXISTING CLOSET	LVT	RB	PT	ETR	-	-
A111	EXISTING OFFICE	CPT	RB	PT	ACT/PAD	-	-
A112	EXISTING ART ROOM	LVT	RB	PT	ACT/PAD	+/-9'-2"(VIF)	-
A113	EXISTING KILN	ETR	ETR	ETR	ETR	-	-
A114	EXISTING CLASSROOM	LVT	RB	PT	ACT/PAD	+/-9'-2"(VIF)	-
A115	EXISTING TOILET	PCT	4PCT	PT	ETR/PT	+/-8'-0"(VIF)	-
A116	EXISTING TOILET	PCT	4PCT	PT	ETR/PT	+/-8'-0"(VIF)	-
A117	EXISTING CLOSET	LVT	RB	ETR	ETR	+/-8'-0"(VIF)	-
A118	EXISTING CLASSROOM	LVT	RB	PT	ACT/PAD	+/-9'-2"(VIF)	-
A119	EXISTING CLOSET	LVT	RB	ETR	ETR	-	-
A120	EXISTING CLOSET	LVT	RB	ETR	ETR	-	-
A121	EXISTING TOILET	PCT	4PCT	PT	ETR/PT	+/-8'-0"(VIF)	-
A122	EXISTING TOILET	PCT	4PCT	PT	ETR/PT	+/-8'-0"(VIF)	-
A123	EXISTING CLASSROOM	LVT	RB	PT	ACT/PAD	+/-9'-2"(VIF)	-
A124	EXISTING CLASSROOM	LVT	RB	PT	ACT/PAD	+/-9'-2"(VIF)	-
A125	EXISTING CLOSET	LVT	RB	ETR	ETR	-	-
A126	EXISTING CLASSROOM	LVT	RB	PT	ACT/PAD	+/-9'-2"(VIF)	-
A127	EXISTING STORAGE	LVT	RB	ETR	ETR	-	-
A128	EXISTING TOILET	PCT	4PCT	PT	ETR/PT	+/-8'-0"(VIF)	-
A129	EXISTING CLOSET	LVT	RB	ETR	ETR	-	-
A130	EXISTING CLASSROOM	LVT	RB	PT	ACT/PAD	+/-9'-2"(VIF)	-
A131	EXISTING STORAGE	LVT	RB	ETR	ETR	-	-
A132	EXISTING TOILET	PCT	4PCT	PT	ETR/PT	+/-8'-0"(VIF)	-
A133	EXISTING CLOSET	LVT	RB	ETR	ETR	-	-
A134	EXISTING CORRIDOR	LVT	RB	PT	ETR	-	3,4
A135	EXISTING CORRIDOR	LVT	RB	PT	ETR	-	3,4
A136	EXISTING P.E. STORAGE	ETR	ETR	ETR	ETR	-	-
A137	EXISTING GYMNASIUM	LVT	RB	PT	ETR/PT	-	4,5,10
A138	EXIST. PERFORMANCE PLATFORM	LVT	RB	PT	PT	-	-
A139	EXISTING CHAIR STORAGE	ETR	ETR	ETR	ETR	-	-
A140	EXISTING TOILET	ETR	ETR	PT	ETR	-	-
A141	EXISTING TOILET	ETR	ETR	PT	ETR	-	-
A142	EXISTING CUST. CLOSET	ETR	ETR	ETR	ETR	-	-
A143	EXISTING OFFICE	LVT	RB	PT	ACT	-	2
A144	EXISTING ACLOVE	LVT	RB	PT	ETR	-	-
A145	EXISTING COMPUTER LAB	CPT	RB	ETR	ETR	-	-
A146	EXISTING MEDIA CENTER	CPT	RB	PT	ACT/PAD	-	4
A147	EXISTING MDF	ETR	ETR	ETR	ETR	-	-
A148	EXISTING CONF.	ETR	ETR	ETR	ETR	-	-
A149	EXISTING OFFICE	ETR	ETR	ETR	ETR	-	-
A150	EXISTING VESTIBULE	LVT	RB	PT	ACT	-	-
A151	EXISTING TOILET	ETR	ETR	PT	ETR	-	-
A152	EXISTING TOILET	ETR	ETR	PT	ETR	-	-
A153	EXISTING OFFICE	CPT	RB	PT	ACT	-	2
-	-	-	-	-	-	-	-
B100	EXISTING CORRIDOR	LVT	RB	PT	ACT	8'-0"	3,4
B101	-	-	-	-	-	-	-
B102	EXISTING WORK ROOM	ETR	ETR	ETR	ETR	9'-2"	-
B103	EXISTING CONF. ROOM	CPT	RB	PT	ETR	-	-
B104	EXISTING VESTIBULE	WC	RB	PT	ACT	9'-2"	-
B105	EXISTING CORRIDOR	LVT	RB	PT	ACT	8'-0"	3,4
B106	EXISTING CLASSROOM	LVT	RB	PT	ACT/PAD	9'-2"	9
B107	EXISTING CLOSET	LVT	RB	ETR	ETR	-	-
B108	EXISTING CLASSROOM	LVT	RB	PT	ACT/PAD	9'-2"	9
B109	EXISTING CLOSET	LVT	RB	ETR	ETR	-	-
B110	EXISTING CLASSROOM	LVT	RB	PT	ACT	9'-2"	-
B110A	EXISTING CLASSROOM	LVT	RB	PT	ACT	9'-2"	-
B111	EXISTING CLOSET	LVT	RB	ETR	ETR	-	-
B112	EXISTING CLASSROOM	LVT	RB	PT	ACT/PAD	9'-2"	-
B113	EXISTING CLOSET	LVT	RB	ETR	ETR	-	-
B114	EXISTING CLASSROOM	LVT	RB	PT	ACT/PAD	9'-2"	-
B115	EXISTING CLOSET	LVT	RB	ETR	ETR	-	-
B116	EXISTING CLASSROOM	LVT	RB	PT	ACT/PAD	9'-2"	-
B117	EXISTING CLOSET	LVT	RB	ETR	ETR	-	-
B118	EXISTING CLASSROOM	LVT	RB	PT	ACT/PAD	9'-2"	-
B119	EXISTING CLOSET	LVT	RB	ETR	ETR	-	-
B120	-	-	-	-	-	-	-
B121	EXISTING CLOSET	LVT	RB	ETR	ETR	-	-
B122	EXISTING CLASSROOM	LVT	RB	PT	ACT/PAD	9'-2"	-
B123	EXISTING CLOSET	LVT	RB	ETR	ETR	-	-
B124	-	-	-	-	-	-	-
B125	EXISTING CLOSET	LVT	RB	ETR	ETR	-	-
B126	-	-	-	-	-	-	-
B127	EXISTING REFERENCE	LVT	RB	PT	ACT/PAD	-	-
B128	EXISTING BOYS	PCT	4PCT	PCT/EPT	GYP/EPT	-	6
B129	EXISTING JANITORS	ETR	ETR	ETR	ETR	-	-
B130	EXISTING GIRLS	PCT	4PCT	PCT/EPT	GYP/EPT	-	6
B131	EXIST. SPECIAL EDUCATION	LVT	RB	PT	ACT/PAD	-	-
B132	EXISTING CLOSET	LVT	RB	ETR	ETR	-	-
B133	EXISTING VESTIBULE	WC	-	ETR	BR/ETR	-	-
B134	EXISTING LOBBY	LVT	RB	ETR/PT	ACT	9'-6"	-

WAKELY ASSOCIATES, INC.
ARCHITECTS

30500 VAN DYKE AVENUE
SUITE M-7
WARREN, MICHIGAN 48093
PH: 586.573.4100
FX: 586.573.0822
www.WakelyAIA.com

FARMINGTON PUBLIC SCHOOLS - 2015 BOND
2018 PROJECTS
KENBROOK & BEECHVIEW ELEMENTARY SCHOOLS

BEECHVIEW ELEMENTARY SCHOOL

ROOM FINISH SCHEDULE

PRELIMINARY ☐
DESIGN DEVELOPMENT ☐
CONSTRUCTION ■
FINAL RECORD ☐

DRAWN BY NJL
CHECKED BY BJS

REVISIONS

DATE: December 12, 2017

SHEET NO.

A7.2BV

JOB NO. 171712A

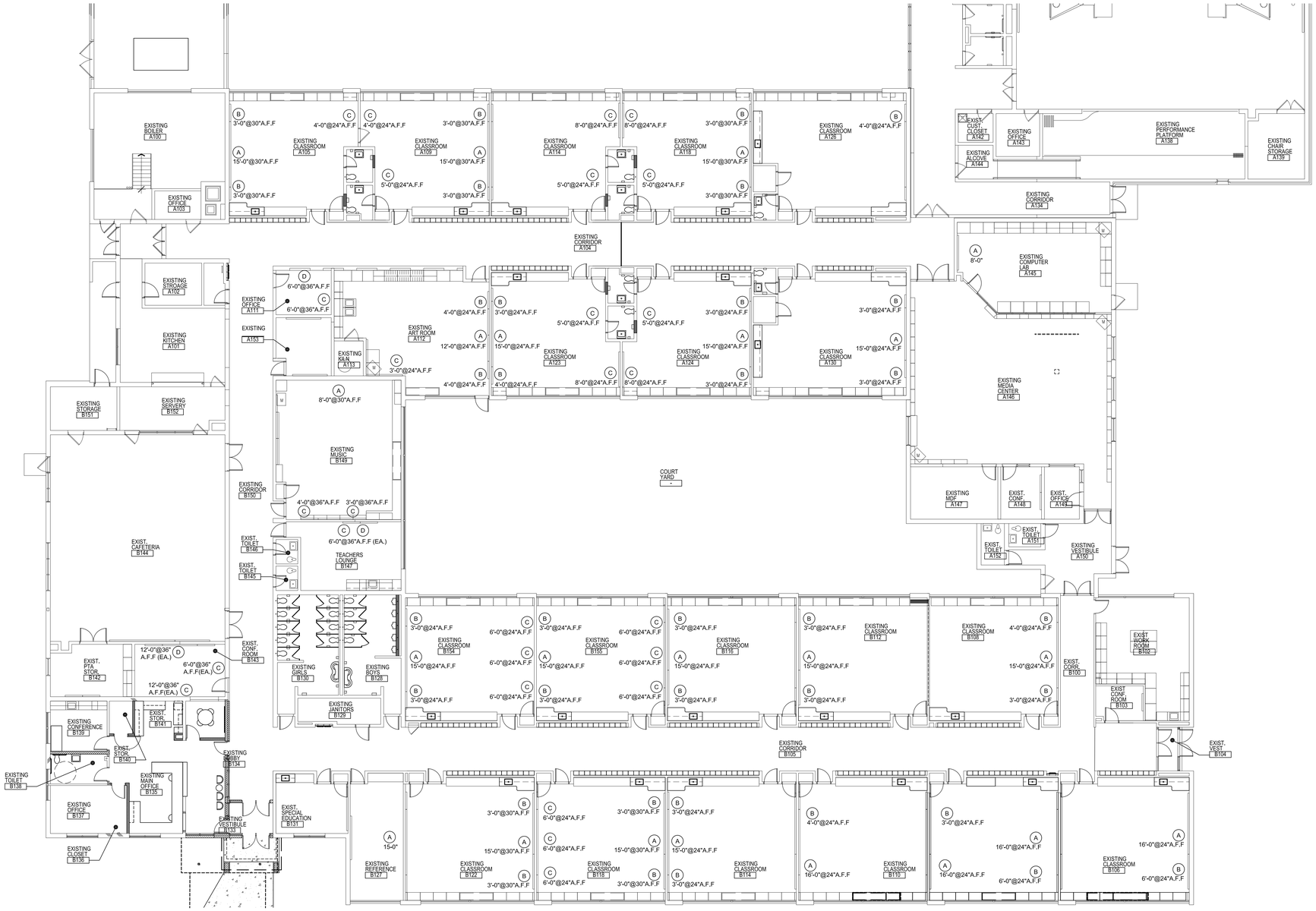

1 COMPOSITE FIRST FLOOR PLAN

SCALE: 1/16" = 1'-0"

N

GENERAL DISPLAY BOARD KEYNOTES:

1. ALL WHITE BOARD/TACK BOARD SIZES AND LOCATIONS ARE TO BE COORDINATED WITH ELECTRICAL DRAWINGS TO COMPATIBILITY WITH NEW RACEWAYS.

DISPLAY BOARD KEYNOTES:

(A) NEW 48" H MARKER BOARD WITH SMART BOARD SEE DETAIL 2/A8.1BV. SEE PLAN FOR WIDTH AND LOCATION. COORDINATE WITH EXISTING RACEWAYS/OBSTRUCTIONS IN FIELD AS REQ'D.

(B) PROVIDE/INSTALL NEW 48" H TACK BOARD. SEE PLANS FOR WIDTHS.

(C) ALTERNATE ____ TO PROVIDE/INSTALL NEW 48" H TACK BOARD IN SEE PLANS FOR WIDTHS, LOCATIONS, AND MOUNTING HT.

(D) ALTERNATE ____ TO PROVIDE/INSTALL NEW 48" H WHITE BOARD IN SEE PLANS FOR WIDTHS, LOCATIONS, AND MOUNTING HT.

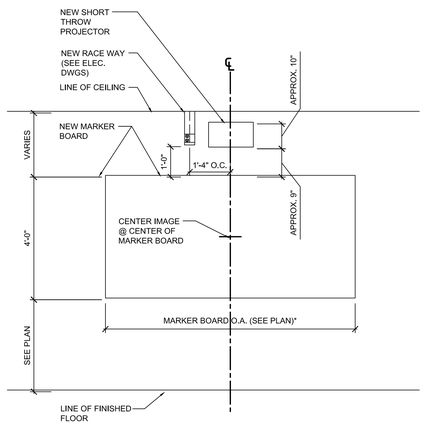

2 TYPICAL MARKER BOARD LOCATION @ PROJECTOR LOCATION - CEILING > 8'-9" A.F.F.

SCALE: N.T.S.

WAKELY ASSOCIATES, INC.
ARCHITECTS

30500 VAN DYKE AVENUE
SUITE M-7
WARREN, MICHIGAN 48093
PH: 586.573.4100
FX: 586.573.0822
www.WakelyAIA.com

FARMINGTON PUBLIC SCHOOLS - 2015 BOND
2018 PROJECTS
KENBROOK & BEECHVIEW ELEMENTARY SCHOOLS

BEECHVIEW ELEMENTARY SCHOOL

DISPLAY BOARD PLAN

PRELIMINARY ☐
DESIGN DEVELOPMENT ☐
CONSTRUCTION ■
FINAL RECORD ☐

DRAWN BY NJL
CHECKED BY BJS

REVISIONS

DATE: December 12, 2017

SHEET NO.

A8.1BV

JOB NO. 171712A

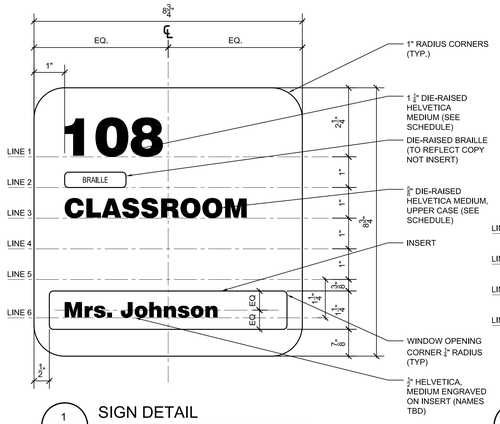

1 - SIGN DETAIL

SCALE: 6" = 1'-0"

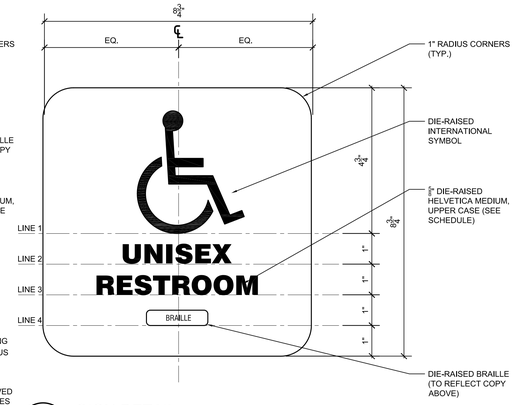

2 - SIGN DETAIL

SCALE: 6" = 1'-0"

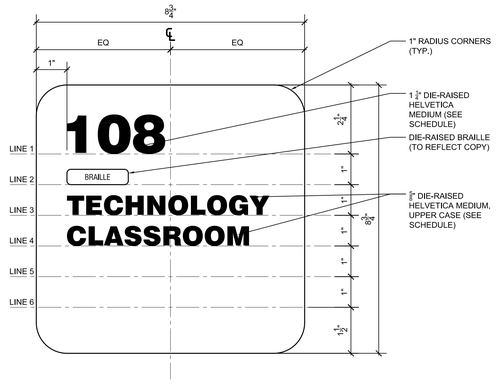

3 - SIGN DETAIL

SCALE: 6" = 1'-0"

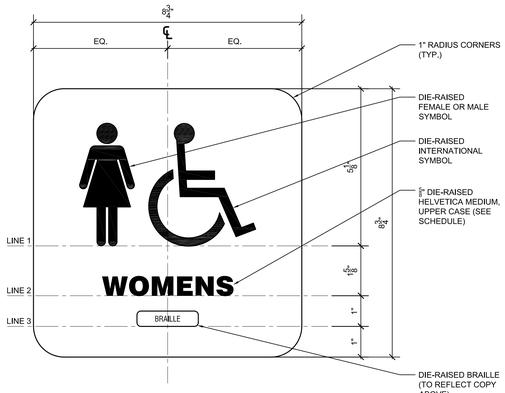

4 - SIGN DETAIL

SCALE: 6" = 1'-0"

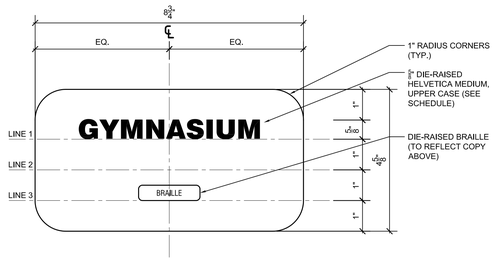

5 - SIGN DETAIL

SCALE: 6" = 1'-0"

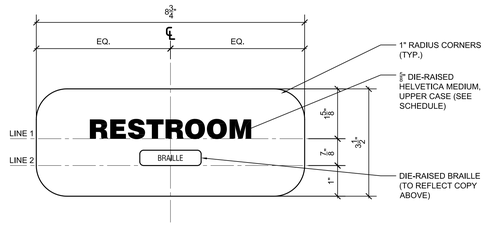

6 - SIGN DETAIL

SCALE: 6" = 1'-0"

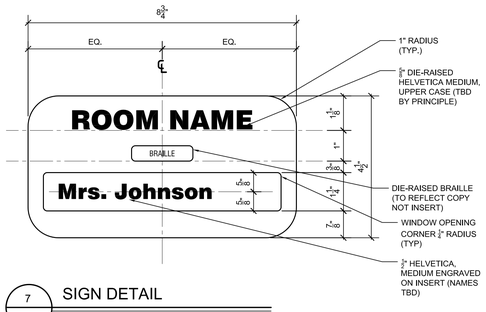

7 - SIGN DETAIL

SCALE: 6" = 1'-0"

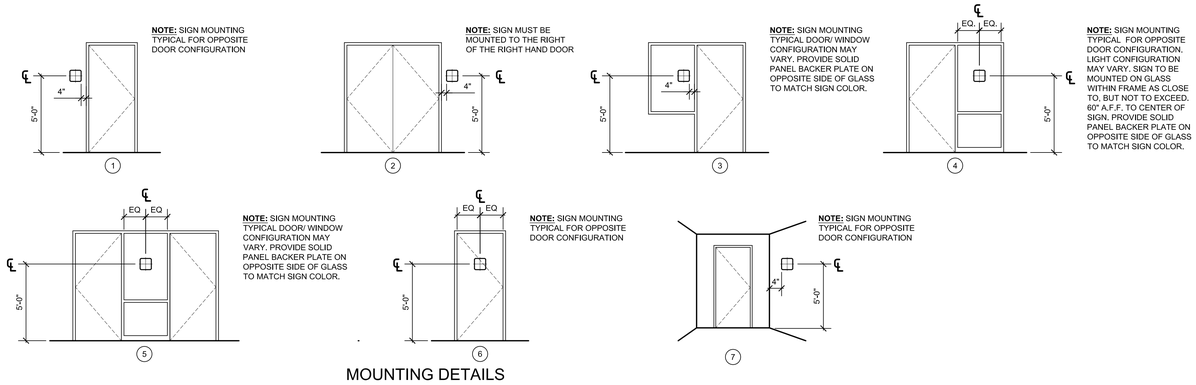

MOUNTING DETAILS

SCALE: 1/4" = 1'-0"

SIGNAGE SCHEDULE

QTY	PLAN NO.	OWNER NO.	TYPE	MOUNTING	TEXT
FIRST FLOOR					
-	B135	-	-	-	-
-	B136	-	-	-	-
-	B137	-	-	-	-
-	B138	-	-	-	-
-	B139	-	-	-	-
-	B140	-	-	-	-
-	B141	-	-	-	-
-	B142	-	-	-	-
-	B143	-	-	-	-
-	B144	-	-	-	-
-	B145	-	-	-	-
-	B146	-	-	-	-
-	B147	-	-	-	-
-	B148	-	-	-	-
-	B149	-	-	-	-
-	B150	-	-	-	-
-	B151	-	-	-	-
-	B152	-	-	-	-
-	-	-	-	-	-
-	-	-	-	-	-

QTY	PLAN NO.	OWNER NO.	TYPE	MOUNTING	TEXT
FIRST FLOOR					
-	A100	-	-	-	-
-	A101	-	-	-	-
-	A102	-	-	-	-
-	A103	-	-	-	-
-	A104	-	-	-	-
-	A105	-	-	-	-
-	A106	-	-	-	-
-	A107	-	-	-	-
-	A108	-	-	-	-
-	A109	-	-	-	-
-	A110	-	-	-	-
-	A111	-	-	-	-
-	A112	-	-	-	-
-	A113	-	-	-	-
-	A114	-	-	-	-
-	A115	-	-	-	-
-	A116	-	-	-	-
-	A117	-	-	-	-
-	A118	-	-	-	-
-	A119	-	-	-	-
-	A120	-	-	-	-
-	A121	-	-	-	-
-	A122	-	-	-	-
-	A123	-	-	-	-
-	A124	-	-	-	-
-	A125	-	-	-	-
-	A126	-	-	-	-
-	A127	-	-	-	-
-	A128	-	-	-	-
-	A129	-	-	-	-
-	A130	-	-	-	-
-	A131	-	-	-	-
-	A132	-	-	-	-
-	A133	-	-	-	-
-	A134	-	-	-	-
-	A135	-	-	-	-
-	A136	-	-	-	-
-	A137	-	-	-	-
-	A138	-	-	-	-
-	A139	-	-	-	-
-	A140	-	-	-	-
-	A141	-	-	-	-
-	A142	-	-	-	-
-	A143	-	-	-	-
-	A144	-	-	-	-
-	A145	-	-	-	-
-	A146	-	-	-	-
-	A147	-	-	-	-
-	A148	-	-	-	-
-	A149	-	-	-	-
-	A150	-	-	-	-
-	A151	-	-	-	-
-	A152	-	-	-	-
-	-	–	-	-	-
-	-	–	-	-	-
-	B100	-	-	-	-
-	B101	–	-	-	-
-	B102	-	-	-	-
-	B103	-	-	-	-
-	B104	-	-	-	-
-	B105	-	-	-	-
-	B106	-	-	-	-
-	B107	-	-	-	-
-	B108	-	-	-	-
-	B109	-	-	-	-
-	B110	-	-	-	-
-	B111	-	-	-	-
-	B112	-	-	-	-
-	B113	-	-	-	-
-	B114	-	-	-	-
-	B115	-	-	-	-
-	B116	-	-	-	-
-	B117	-	-	-	-
-	B118	-	-	-	-
-	B119	-	-	-	-
-	B120	–	-	-	-
-	B121	-	-	-	-
-	B122	-	-	-	-
-	B123	-	-	-	-
-	B124	–	-	-	-
-	B125	-	-	-	-
-	B126	-	-	-	-
-	B127	-	-	-	-
-	B128	-	-	-	-
-	B129	-	-	-	-
-	B130	-	-	-	-
-	B131	-	-	-	-
-	B132	-	-	-	-
-	B133	-	-	-	-
-	B134	-	-	-	-

WAKELY ASSOCIATES, INC.
ARCHITECTS

30500 VAN DYKE AVENUE
SUITE M-7
WARREN, MICHIGAN 48093
PH: 586.573.4100
FX: 586.573.0822
www.WakelyAIA.com

FARMINGTON PUBLIC SCHOOLS - 2015 BOND
2018 PROJECTS
KENBROOK & BEECHVIEW ELEMENTARY SCHOOLS

BEECHVIEW ELEMENTARY SCHOOL

SIGNAGE SCHEDULE AND DETAILS

PRELIMINARY ☐
DESIGN DEVELOPMENT ☐
CONSTRUCTION ☐
FINAL RECORD ■

DRAWN BY NJL
CHECKED BY BJS

REVISIONS

DATE: December 6, 2017

SHEET NO.

A8.2BV

JOB NO. 171712A

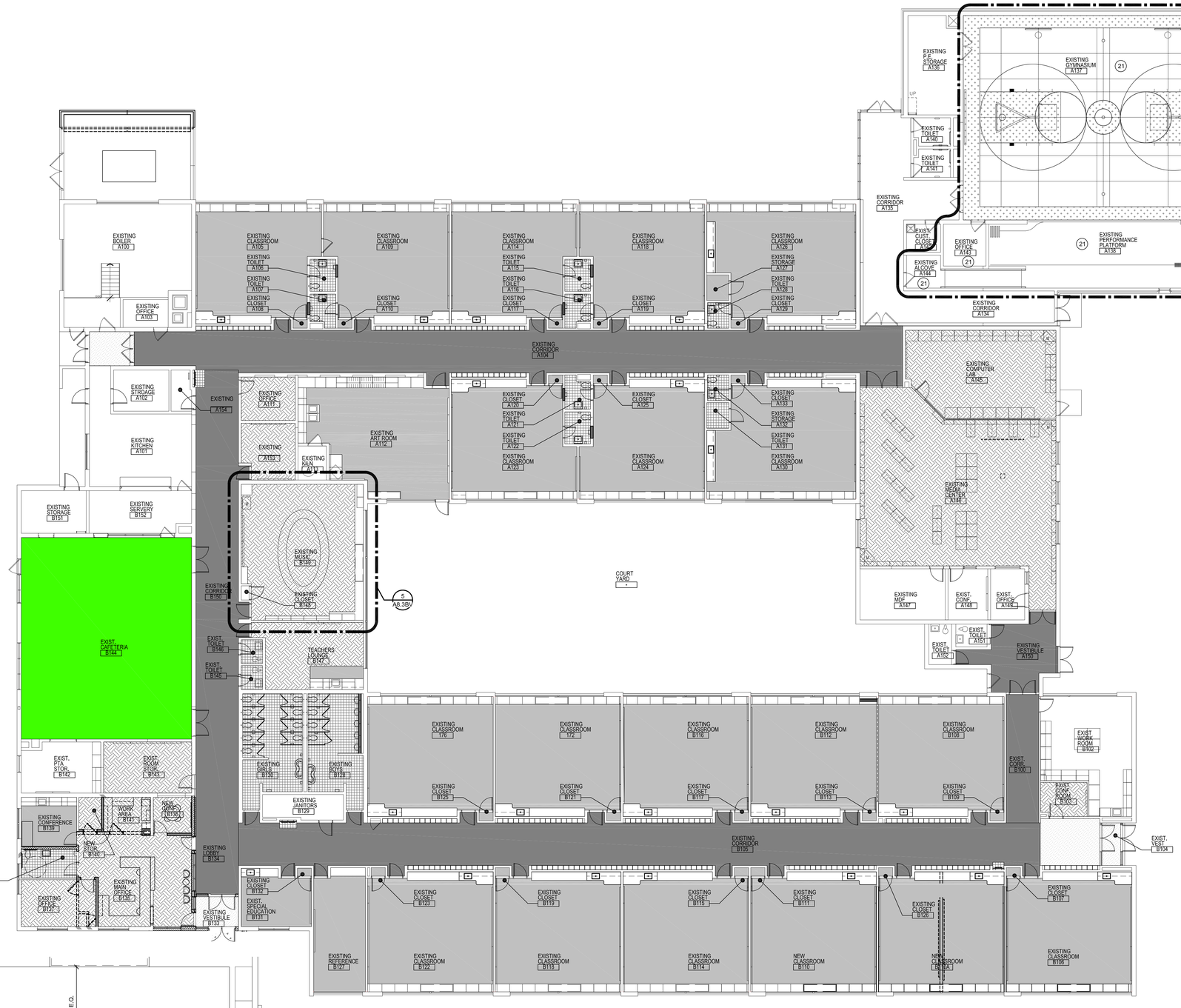

1 COMPOSITE PLAN
SCALE: 3/32" = 1'-0"

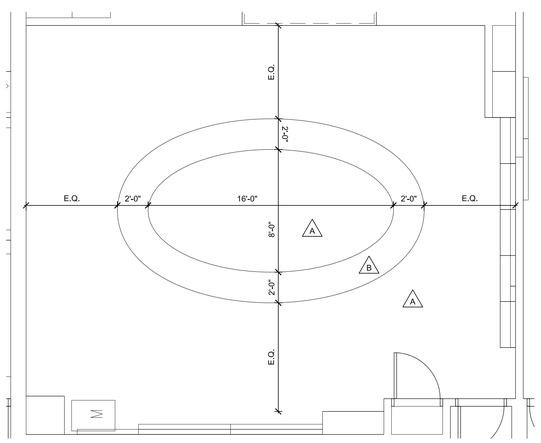

5 MUSIC ROOM CARPET DETAIL
SCALE: 1/4" = 1'-0"

LEGEND:

A CPT-1 PER FINISH SCHEDULE

B CPT-2 PER FINISH SCHEDULE

NOTE: VERIFY EXACT LOCATION OF NEW OVAL IN ROOM WITH MUSIC TEACHER

TILE FLOORING LEGEND

- 6"X36" WOOD PLANK DESIGN - LAID OUT IN PATTERN IN DETAIL 2/A8.3BV
- 6"X36" WOOD PLANK DESIGN - LAID OUT IN PATTERN IN DETAIL 3/A8.3BV
- 6" x 36" AND 18"X18" TILE DESIGN - LAID OUT IN PATTERN REPRESENTED BY DETAIL 4/A8.3BV
- WALKOFF CARPET
- CERAMIC TILE
- CARPET

TILE PATTERNS SHOWN FOR REFERENCE FINAL PATTERNS TBD AT A LATER DATE

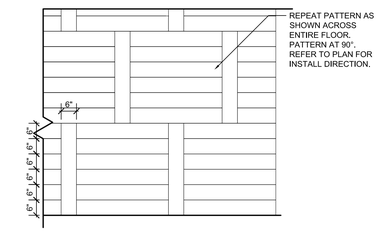

NOTE: TANDUS EVENT SERIES 6" x 36" IN COLOR: TBD

2 A8.3BV CLASSROOM FLOOR PATTERN DETAIL
SCALE: 1/2" = 1'-0"

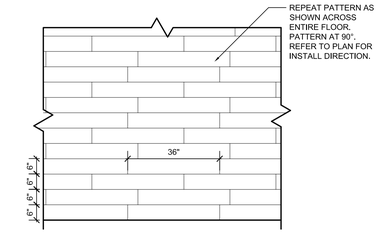

NOTE: TANDUS EVENT SERIES 6" x 36" IN COLOR: TBD

3 A8.3BV CORRIDOR FLOOR PATTERN DETAIL
SCALE: 1/2" = 1'-0"

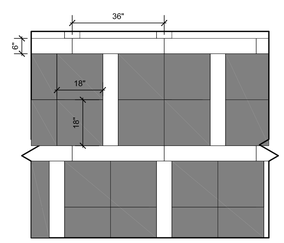

NOTE: TANDUS EVENT SERIES 6" x 36" IN COLOR: TBD

4 A8.3BV CAFETERIA FLOOR PATTERN DETAIL
SCALE: 1/4" = 1'-0"

TILE PATTERNS SHOWN FOR REFERENCE FINAL PATTERNS TBD AT A LATER DATE

WAKELY ASSOCIATES, INC.
ARCHITECTS

30500 VAN DYKE AVENUE
SUITE M-7
WARREN, MICHIGAN 48093
PH: 586.573.4100
FX: 586.573.0822
www.WakelyAIA.com

FARMINGTON PUBLIC SCHOOLS - 2015 BOND
2018 PROJECTS
KENBROOK & BEECHVIEW ELEMENTARY SCHOOLS

BEECHVIEW ELEMENTARY SCHOOL

COMPOSITE PLAN

PRELIMINARY ☐
DESIGN DEVELOPMENT ☐
CONSTRUCTION ■
FINAL RECORD ☐

DRAWN BY NJL
CHECKED BY BJS

REVISIONS

DATE: December 12, 2017

SHEET NO.
A8.3BV

JOB NO. 171712A

MECHANICAL ABBREVIATION LIST

ABBREVIATION	DESCRIPTION	ABBREVIATION	DESCRIPTION	ABBREVIATION	DESCRIPTION
A	COMPRESSED AIR	FD	FLOOR DRAIN	O	OXYGEN
A(___#)	COMPRESSED AIR (SPECIFIC PSIG)	FFD	FUNNEL FLOOR DRAIN	OA	OUTSIDE AIR
AAV	AUTOMATIC AIR VENT	FH	FIRE HYDRANT	OAT	OUTSIDE AIR TEMPERATURE
ACC	AIR COOLED CONDENSER	FHC	FIRE HOSE CABINET	OBD	OPPOSED BLADE DAMPER
ACCU	AIR COOLED CONDENSING UNIT	FHR	FIRE HOSE RACK	OC	ON CENTER/CENTER TO CENTER
AD	ACCESS DOOR	FHV	FIRE HOSE VALVE	OD	OUTSIDE DIAMETER
AD	AREA DRAIN	FLA	FULL LOAD AMPS	OED	OPEN ENDED DUCT
AE	AIR EXTRACTOR	FLR	FLOOR	OFCI	OWNER FURNISHED, CONTRACTOR INSTALLED
AFF	ABOVE FINISHED FLOOR	FM	FLOW METER	OFOI	OWNER FURNISHED, OWNER INSTALLED
AHU	AIR HANDLING UNIT	FMS	FLOW MEASURING STATION	OL	OVERLOAD
ALT	ALTERNATE	FPM	FEET PER MINUTE	ORC	OVERFLOW RAIN CONDUCTOR
AMP	AMPERE	FP	FIRE PUMP	ORD	OVERFLOW ROOF DRAIN
APD	AIR PRESSURE DROP	FPTU	FAN POWERED (AIR) TERMINAL UNIT	OS&Y	OUTSIDE SCREW AND YOKE
AR	ARGON	FS	FLOOR SINK	OV	OUTLET VELOCITY
ASHRAE	AMERICAN SOCIETY OF HEATING, REFRIGERATION AND AIR-CONDITIONING ENGINEERS	FSEC	FOOD SERVICE EQUIPMENT CONTRACTOR	OWS	OPERATOR WORKSTATION
		FT	FEET		
ASR	AUTOMATIC SPRINKLER RISER	FTR	FINNED TUBE RADIATION	PACU	PACKAGED AIR CONDITIONING UNIT
AUX	AUXILIARY	FV	FACE VELOCITY	PBD	PARALLEL BLADE DAMPER
AV	ACID VENT			PC	PUMPED CONDENSATE
AVTR	ACID VENT THROUGH ROOF	G	NATURAL GAS	PCW	PROCESS COOLING WATER
AW	ACID WASTE	GA	GAUGE	PCWR	PROCESS COOLING WATER RETURN
		GAL	GALLON	PCWS	PROCESS COOLING WATER SUPPLY
BAS	BUILDING AUTOMATION SYSTEM	GRH	GRAVITY RELIEF HOOD	PD	PRESSURE DROP (FEET OF WATER)
BCU	BLOWER COIL UNIT	GPH	GALLONS PER HOUR	PH	PERIMETER HEAT
BDD	BACKDRAFT DAMPER	GPM	GALLONS PER MINUTE	PHR	PERIMETER HEAT RETURN
BFF	BELOW FINISHED FLOOR			PHS	PERIMETER HEAT SUPPLY
BFP	BACKFLOW PREVENTER	H	HYDROGEN	PNL	PANEL
BHP	BRAKE HORSEPOWER	HB	HOSE BIBB	PPM	PARTS PER MILLION
BOD	BOTTOM OF DUCT	HC	HEATING COIL	PRESS	PRESSURE
BOP	BOTTOM OF PIPE	HD	HOT DECK	PRV	PRESSURE REDUCING VALVE
BTU	BRITISH THERMAL UNIT	HEPA	HIGH EFFICIENCY PARTICULATE ARRESTANCE	PSAN	PUMPED SANITARY
BTUH	BRITISH THERMAL UNIT PER HOUR	HL	HIGH LIMIT	PST	PUMPED STORM
BWV	BACKWATER VALVE	HOA	HAND/OFF/AUTO	PSI	POUNDS PER SQUARE INCH
		HP	HEAT PUMP	PSIA	POUNDS PER SQUARE INCH - ABSOLUTE
C	COMMON	HP	HORSEPOWER	PSIG	POUNDS PER SQUARE INCH - GAUGE
CAP	CAPACITY	HPCW	HIGH PRESSURE DOMESTIC COLD WATER	PW	PURIFIED WATER
CAV	CONSTANT AIR VOLUME	HPHW	HIGH PRESSURE DOMESTIC HOT WATER	PWR	PURIFIED WATER RETURN
CB	CATCH BASIN	HPHWR	HIGH PRESSURE DOMESTIC HOT WATER RETURN	PWS	PURIFIED WATER SUPPLY
CC	COOLING COIL	HPL	HEAT PUMP LOOP		
CD	COLD DECK	HPLR	HEAT PUMP LOOP RETURN	(R)	RELOCATED
CD	CONDENSATE DRAIN	HPLS	HEAT PUMP LOOP SUPPLY	R	RETURN GRILLE OR REGISTER
CFCI	CONTRACTOR FURNISHED, CONTRACTOR INSTALLED	HR	HOUR	RA	RETURN AIR
CFH	CUBIC FEET PER HOUR	HTG	HEATING	RAT	RETURN AIR TEMPERATURE
CFM	CUBIC FEET PER MINUTE	HV	HEATING VENTILATING	RC	RAIN CONDUCTOR
CH	CHILLER	HVAC	HEATING, VENTILATING, AIR CONDITIONING	RCP	RADIANT CEILING PANEL
CHW	CHILLED WATER	HWH	HOT WATER HEATING	RD	ROOF DRAIN
CHWR	CHILLED WATER RETURN	HWHR	HOT WATER HEATING RETURN	REQD	REQUIRED
CHWS	CHILLED WATER SUPPLY	HWHS	HOT WATER HEATING SUPPLY	REF	ROOF EXHAUST FAN
CLG	COOLING	HW	DOMESTIC HOT WATER	RF	RETURN FAN
CNDS	CONDENSATE	HW(___)	DOMESTIC HOT WATER (SPECIFIC TEMP °F)	RH	RELATIVE HUMIDITY
CNDS (___#)	CONDENSATE (SPECIFIC PSIG)	HWR	DOMESTIC HOT WATER RETURN	RL	REFRIGERANT LIQUID
CO	CLEAN OUT	HX	HEAT EXCHANGER	RLFA	RELIEF AIR
CO2	CARBON DIOXIDE	HZ	HERTZ	RPM	REVOLUTIONS PER MINUTE
CONT	CONTINUATION OR CONTINUED			RS	REFRIGERANT SUCTION
CONTR	CONTRACTOR	IAQ	INDOOR AIR QUALITY	RTU	ROOFTOP UNIT
CONV	CONVECTOR	ID	INSIDE DIAMETER		
COP	COEFFICIENT OF PERFORMACE	IE	INVERT ELEVATION	S	SUPPLY AIR DIFFUSER OR GRILLE
CP	CIRCULATING PUMP	IH	INTAKE HOOD	SA	SOUND ATTENUATOR
CRU	CONDENSATE RETURN UNIT	IN	INCHES	SA	SUPPLY AIR
CSS	CLINICAL SERVICE SINK	IR	INFRARED HEATER	SAN	SANITARY WASTE
CT	COOLING TOWER	IW	INDIRECT WASTE	SAT	SUPPLY AIR TEMPERATURE
CUH	CABINET UNIT HEATER			SECT	SECTION
CW	DOMESTIC COLD WATER	JC	JANITOR'S CLOSET	SF	SUPPLY FAN
CWR	CONDENSER WATER RETURN	JP	JOCKEY PUMP	SH	SHOWER
CWS	CONDENSER WATER SUPPLY			SK	SINK
		KW	KILOWATT	SMR	SNOW MELT RETURN
D&T	DRIP AND TRAP	KWH	KILOWATT-HOUR	SMS	SNOW MELT SUPPLY
DA	DISCHARGE AIR			SP	STATIC PRESSURE
DAT	DISCHARGE AIR TEMPERATURE	LAT	LEAVING AIR TEMPERATURE	SPEC	SPECIFICATION
DB	DRY BULB	LAB	LABORATORY	SPKLR	SPRINKLER
DDC	DIRECT DIGITAL CONTROL	LAV	LAVATORY	SQFT	SQUARE FOOT/SQUARE FEET
DEG	DEGREE	LBS	POUNDS	S/S	START/STOP
DFU	DRAINAGE FIXTURE UNITS	LDB	LEAVING DRY BULB	SS	SERVICE SINK
DIA	DIAMETER	LL	LOW LIMIT	ST	STORM
DMPR	DAMPER	LPC	LOW PRESSURE CONDENSATE	STD	STANDARD
D/N	DAY/NIGHT	LPS	LOW PRESSURE STEAM	STK	STACK
DN	DOWN	LRA	LOCKED ROTOR AMPS	STM	STEAM
DNZ	DOWNSPOUT NOZZLE	LWB	LEAVING WET BULB	STM(___#)	STEAM (SPECIFIC PSIG)
DS	DUCT SILENCER	LWT	LEAVING WATER TEMPERATURE	S/W	SUMMER/WINTER
DT	DRAIN TILE			SW	SWITCH
DTC	DRAIN TILE CONNECTION	MA	MIXED AIR		
DWH	DOMESTIC WATER HEATER	MAT	MIXED AIR TEMPERATURE	T	TRANSFER GRILLE
DWG	DRAWING	MAU	MAKE-UP AIR UNIT	TC	TEMPERATURE CONTROL
		MAX	MAXIMUM	TC	TEMPERING COIL
(E)	EXISTING	MBH	THOUSAND BRITISH THERMAL UNITS PER HOUR	TCP	TEMPERATURE CONTROL PANEL
E	EXHAUST GRILLE OR REGISTER	MCA	MEDICAL COMPRESSED AIR	TD	TRENCH DRAIN
EA	EACH	MCA	MINIMUM CIRCUIT AMPACITY	TEMP	TEMPERATURE
EA	EXHAUST AIR	MCC	MOTOR CONTROL CENTER	TEMP	TEMPORARY
EAT	ENTERING AIR TEMPERATURE	MECH	MECHANICAL	TH	TERMINAL HEATING
EC	EXPANSION COMPENSATOR	MEZZ	MEZZANINE	THA	TOTAL HEAT ABSORBED
ECUH	ELECTRIC CABINET UNIT HEATER	MFR	MANUFACTURER	THR	TERMINAL HEATING RETURN
EDB	ENTERING DRY BULB	MH	MANHOLE	THR	TOTAL HEAT REJECTED
EER	ENERGY EFFICIENCY RATIO	MIN	MINIMUM	THS	TERMINAL HEATING SUPPLY
EES	EMERGENCY EYE WASH / SHOWER	MISC	MISCELLANEOUS	TSP	TOTAL STATIC PRESSURE
EEW	EMERGENCY EYE WASH	MMBH	MILLION BRITISH THERMAL UNITS PER HOUR	TU	(AIR) TERMINAL UNIT
EF	EXHAUST FAN	M/S	MOTOR STARTER	TV	TURNING VANES
EFF	EFFICIENCY	MTD	MOUNTED	TYP	TYPICAL
EHC	ELECTRIC HEATING COIL	MTR	MOTOR		
EJ	EXPANSION JOINT	MV	MANUAL AIR VENT	UH	UNIT HEATER
EL	ELEVATION	MVAC	MEDICAL VACUUM	UL	UNDERWRITER'S LABORATORY
ELEC	ELECTRICAL			UON	UNLESS OTHERWISE NOTED
EMS	ENERGY MANAGEMENT SYSTEM	N	NITROGEN	UR	URINAL
ERL	ENERGY RECOVERY LOOP	N2O	NITROUS OXIDE	UV	UNIT VENTILATOR
ERLR	ENERGY RECOVERY LOOP RETURN	NC	NOISE CRITERIA		
ERLS	ENERGY RECOVERY LOOP SUPPLY	NC	NORMALLY CLOSED	V	VALVE
ERU	ENERGY RECOVERY UNIT	NCTC	NORMALLY CLOSED TIMED CLOSED	V	VENT
ESH	EMERGENCY SHOWER	NCTO	NORMALLY CLOSED TIMED OPEN	VAC	VACUUM
ESP	EXTERNAL STATIC PRESSURE	NFPA	NATIONAL FIRE PROTECTION ASSOCIATION	VAV	VARIABLE AIR VOLUME
EUH	ELECTRIC UNIT HEATER	NOTC	NORMALLY OPEN TIMED CLOSED	VB	VACUUM BREAKER
EWB	ENTERING WET BULB	NOTO	NORMALLY OPEN TIMED OPEN	VD	VOLUME DAMPER (MANUALLY ADJUSTABLE)
EWC	ELECTRIC WATER COOLER	NIC	NOT IN CONTRACT	VOL	VOLUME
EWT	ENTERING WATER TEMPERATURE	NO	NORMALLY OPEN	VFC	VARIABLE FREQUENCY CONTROLLER
EXH	EXHAUST	NOM	NOMINAL	VTR	VENT THROUGH ROOF
		NPCW	NON POTABLE COLD WATER	VTU	VENTURI TERMINAL UNIT
				VUV	VERTICAL UNIT VENTILATOR
F	FIRE PROTECTION				
°F	DEGREES FAHRENHEIT			W	WASTE
F&B	FACE AND BYPASS			WAV	WASTE AND VENT
F&T	FLOAT AND THERMOSTATIC			WB	WET BULB
FA	FACE AREA			WC	WATER CLOSET
FCU	FAN COIL UNIT			WC	WATER COLUMN
				WG	WATER GAUGE
				WH	WALL HYDRANT
				WPD	WATER PRESSURE DROP
				WT	WEIGHT
				XFMR	TRANSFORMER

TEMPERATURE CONTROL - PARTIAL SYMBOLS LIST

SYMBOL	DESCRIPTION	SYMBOL	DESCRIPTION
CO2	CARBON DIOXIDE SENSOR	OS	OCCUPANCY SENSOR
CO	CARBON MONOXIDE SENSOR	PT	PRESSURE TRANSMITTER
DPT	DIFFERENTIAL PRESSURE TRANSMITTER	SP	STATIC PRESSURE SENSOR OR PROBE
FM	FLOW METER	2-D	VALVE - 2 WAY CONTROL VALVE
	GUARD FOR STAT OR SENSOR	3-D	VALVE - 3 WAY CONTROL VALVE
H	HUMIDISTAT OR HUMIDITY SENSOR (AS DEFINED ON TC DRAWINGS)	T	THERMOSTAT OR TEMPERATURE SENSOR (AS DEFINED ON TC DRAWINGS)

NOTE: LIST OF ADDITIONAL SYMBOLS & ABBREVIATIONS ASSOCIATED WITH TEMPERATURE CONTROLS ARE IDENTIFIED ON TC DRAWINGS.

MECHANICAL SYMBOL LIST

PIPING SYMBOLS

SYMBOL	DESCRIPTION
AAV	AIR VENT - AUTOMATIC
MV	AIR VENT - MANUAL
BFP	BACKFLOW PREVENTER
	CATCH BASIN
CP	CIRCULATING PUMP
CO	CLEAN OUT - IN FLOOR
CO	CLEAN OUT - FLANGE
	DIRECTION OF FLOW
	DIRECTION OF PITCH - DOWN
	FINNED TUBE RADIATION
	FIRE PROTECTION - SIAMESE CONNECTION - FREE STANDING
	FIRE PROTECTION - SIAMESE CONNECTION - WALL MOUNTED
	FIRE PROTECTION - SPRINKLER HEAD, CONCEALED
	FIRE PROTECTION - SPRINKLER HEAD, PENDANT
	FIRE PROTECTION - SPRINKLER HEAD, UPRIGHT
	FIRE PROTECTION - SPRINKLER HEAD, SIDEWALL
	FLOOR DRAIN
	FLOOR DRAIN - ELEVATION
	FLOOR DRAIN - FUNNEL
	FLOOR DRAIN - FUNNEL, ELEVATION
	FLOW MEASURING DEVICE (FOR TEST AND BALANCING)
FS	FLOW SWITCH
FM	FLOW METER
HB	HOSE BIBB
MH	MANHOLE
	OPEN SITE DRAIN
	PIPE - ANCHOR
	PIPE - CAP OR PLUG
	PIPE - ELBOW DOWN
	PIPE - ELBOW UP
	PIPE - EXPANSION JOINT OR COMPENSATOR
	PIPE - FLANGE
	PIPE - HOSE AND BRAID FLEXIBLE CONNECTION
	PIPE - RUBBER FLEXIBLE CONNECTION
	PIPE - GUIDE
	PIPE - TEE DOWN
	PIPE - TEE UP
	PIPE - UNION
P/T	PRESSURE AND TEMPERATURE TEST PLUG
	PRESSURE GAUGE AND COCK
	REDUCER - CONCENTRIC
	REDUCER - ECCENTRIC
	ROOF/OVERFLOW DRAIN
	STEAM TRAP - FLOAT AND THERMOSTATIC
	STEAM TRAP - BUCKET
	STRAINER
	STRAINER WITH VALVE AND BLOW-OFF
	THERMOMETER
	TRAP
	VALVE - ANGLE
	VALVE - BALL
	VALVE - BUTTERFLY
0.5	VALVE - BALANCE (i.e. BALANCE VALVE TO 0.5 GPM)
0.5	VALVE - COMBINATION BALANCE & FLOW MEASURING (i.e. BALANCE VALVE TO 0.5 GPM)
	VALVE - CHECK
	VALVE - SPRING CHECK
	VALVE - GAS (MANUAL)
	VALVE - GLOBE
	VALVE - ISOLATION
	VALVE - NEEDLE
	VALVE - OS&Y
	VALVE - PLUG
	VALVE - PRESSURE REGULATING
	VALVE - PRESSURE REDUCING
	VALVE - PRESSURE RELIEF
	VALVE - PRESSURE & TEMPERATURE RELIEF
VTR	VENT THROUGH ROOF
WH	WALL HYDRANT

DOUBLE LINE PIPING SYMBOLS

SYMBOL	DESCRIPTION
	FLANGE
	FLEX CONNECTION
	STRAINER - BASKET
	STRAINER - Y TYPE
	VALVE - 2 WAY CONTROL
	VALVE - 3 WAY CONTROL
	VALVE - BUTTERFLY
	VALVE - CHECK
	VALVE - DETECTOR CHECK
	VALVE - OS&Y HORIZONTAL STEM
	VALVE - OS&Y VERTICAL STEM

DUCTWORK SYMBOLS

SYMBOL	DESCRIPTION
TU-101	AIR TERMINAL UNIT
TU-101	AIR TERMINAL UNIT WITH HEATING COIL
VTU-101	VENTURI AIR TERMINAL UNIT
VTU-101	VENTURI AIR TERMINAL UNIT WITH HEATING COIL
	DAMPER - HORIZONTAL FIRE (EXISTING, NEW)
	DAMPER - HORIZONTAL FIRE / SMOKE (EXISTING, NEW)
	DAMPER - SMOKE (EXISTING, NEW)
	DAMPER - VERTICAL FIRE (EXISTING, NEW)
	DAMPER - VERTICAL FIRE / SMOKE (EXISTING, NEW)
BDD	DAMPER - BACK DRAFT
M	DAMPER - MOTORIZED
	DAMPER - VOLUME (MANUALLY ADJUSTABLE)
	DIFFUSER - BLANK OFF
	DIFFUSER - LINEAR SLOT
	DIFFUSER - SQUARE OR RECTANGULAR
	DUCT CROSS SECTION - SUPPLY
	DUCT CROSS SECTION - RETURN
	DUCT CROSS SECTION - EXHAUST
	DUCT - FLEXIBLE CONNECTION
	DUCT - FLEXIBLE DUCT
	DUCT TAKE-OFF - ROUND CONICAL
	DUCT TAKE-OFF - RECTANGULAR WITH SHOE TAP
	ELBOW - RECTANGULAR WITH TURNING VANES
	ELBOW - RECTANGULAR/ ROUND SMOOTH RADIUS
	ELBOW DOWN - RECTANGULAR
	ELBOW DOWN - ROUND
	ELBOW UP - RECTANGULAR
	ELBOW UP - ROUND
	FAN - AXIAL
	FAN - CENTRIFUGAL (ELEVATION)
	HEATING COIL
D	INCLINED DROP IN DIRECTION OF AIRFLOW
R	INCLINED RISE IN DIRECTION OF AIRFLOW
	INTAKE OR RELIEF HOOD
EF	REGISTER - RETURN OR EXHAUST
	REGISTER - RETURN WITH BOOT
	REGISTER - TRANSFER GRILLE
	ROOF EXHAUST FAN
	TRANSITION - CONCENTRIC
	TRANSITION - ECCENTRIC
	UNIT HEATER - HORIZONTAL THROW
	UNIT HEATER - VERTICAL THROW

DOUBLE LINE DUCTWORK SYMBOLS

SYMBOL	DESCRIPTION
	DUCT TAKE-OFF - RECTANGULAR WITH SHOE TAP
	DUCT TAKE-OFF - ROUND CONICAL
	ELBOW - RECTANGULAR WITH TURNING VANES
	ELBOW - RECTANGULAR SHORT RADIUS WITH SPLITTER VANES
	ELBOW - ROUND
	ELBOW - RECTANGULAR SMOOTH RADIUS
	ELBOW DOWN - RECTANGULAR
	ELBOW DOWN - ROUND
	ELBOW UP - RECTANGULAR
	ELBOW UP - ROUND
	HEATING COIL
D	INCLINED DROP IN DIRECTION OF AIRFLOW
R	INCLINED RISE IN DIRECTION OF AIRFLOW
	TRANSITION - CONCENTRIC
	TRANSITION - ECCENTRIC

MECHANICAL DRAWING INDEX

SHEET NO.	SHEET TITLE
M0.1BV	MECHANICAL STANDARDS AND DRAWING INDEX
M01.1BV	MECHANICAL DEMOLITION PLAN - AREA 'A'
M01.2BV	MECHANICAL DEMOLITION PLAN - AREA 'B'
M2.1BV	PLUMBING NEW WORK PLAN - AREA 'A'
M2.2BV	PLUMBING NEW WORK PLAN - AREA 'B'
M3.1BV	HVAC PIPING NEW WORK PLAN - AREA 'A'
M3.2BV	HVAC PIPING NEW WORK PLAN - AREA 'B'
M4.1BV	SHEET METAL NEW WORK PLAN - AREA 'A'
M4.2BV	SHEET METAL NEW WORK PLAN - AREA 'B'
M6.1BV	MECHANICAL DETAILS
M6.2BV	MECHANICAL DETAILS
M7.1BV	MECHANICAL SCHEDULES
M7.2BV	MECHANICAL SCHEDULES
M7.3BV	MECHANICAL SCHEDULES
M8.1BV	TEMPERATURE CONTROL STANDARDS AND GENERAL NOTES
M8.2BV	TEMPERATURE CONTROLS
M8.3BV	TEMPERATURE CONTROLS
M8.4BV	TEMPERATURE CONTROLS

STANDARD METHODS OF NOTATION

S-1 10ø 350-4	SUPPLY DIFFUSER WITH SCHEDULE TAG "1", 10" DIAMETER NECK SIZE 350 CFM TYPICAL FOR 4
R-1 22x22 640-2	RETURN REGISTER WITH SCHEDULE TAG "1", 22"x 22" NECK SIZE 640 CFM TYPICAL FOR 2 EXHAUST REGISTER E DESIGNATION SIMILAR.
TU-101	AIR TERMINAL UNIT WITH HEATING COIL NO. 101 WITH SERVICE CLEARANCE SHOWN
VTU-101	VENTURI AIR TERMINAL WITH HEATING COIL NO. 101 WITH SERVICE CLEARANCE SHOWN
8	PIPE DIAMETER NOTATION ALL SIZES IN INCHES
8ø 22x10 18x14ø	DUCT SIZE NOTATION ALL SIZES IN INCHES OVAL DUCT RECTANGULAR DUCT
1	CONSTRUCTION NOTE NUMBER
EF 1	EQUIPMENT DESIGNATION, (i.e. EXHAUST FAN NUMBER 1)
HW-1	PIPING RISER DESIGNATION (i.e. HOT WATER RISER NUMBER 1)
	NEW SYSTEM COMPONENT EXISTING SYSTEM COMPONENT TO REMAIN POINT OF NEW CONNECTION SYMBOL
1 M5.1	SECTION OR PLAN NUMBER SHEET WHERE SECTION IS DRAWN
1 M5.1	AREA OF ENLARGEMENT PLAN NUMBER SHEET WHERE ENLARGED PLAN IS DRAWN
1 M5.1	SECTION OR PLAN NUMBER SHEET WHERE SECTION IS CUT OR ENLARGED PLAN IS REFERENCED
SHEET M1.0 SHEET M1.1	MATCH LINE
	HEAVY LINE WEIGHT INDICATES NEW WORK
	LIGHT LINE WEIGHT INDICATES EXISTING EQUIPMENT OR REFERENCED INFORMATION
	GRAY LINE INDICATES BACKGROUND INFORMATION
	DASHED LINES INDICATE PIPING ROUTED BELOW SLAB OR GRADE
	HATCH MARKS INDICATE EQUIPMENT OR MATERIALS TO BE DISCONNECTED AND REMOVED.

SECTION OR ENLARGED PLAN

1 / M5.1

SCALE: 1/8" = 1' - 0"

NOTE: SOME SYMBOLS AND ABBREVIATIONS SHOWN MAY NOT APPLY TO THIS PROJECT.

WA

WAKELY ASSOCIATES, INC.
ARCHITECTS & ENGINEERS

30500 VAN DYKE AVE.
SUITE M-7
WARREN, MICHIGAN, 48093

TEL. 586-573-4100
FAX. 586-573-0822
E-MAIL: WA@WAKELYAIA.COM

Peter Basso Associates Inc
CONSULTING ENGINEERS
5145 Livernois, Suite 100
Troy, Michigan 48098-3276
Tel: 248-879-5668
Fax: 248-879-0007
www.PeterBassoAssociates.com
PBA Project No.: 2015-0144

FARMINGTON PUBLIC SCHOOLS - 2015 BOND
2018 PROJECTS
KENBROOK & BEECHVIEW ELEMENTARY SCHOOLS

BEECHVIEW ELEMENTARY SCHOOL

MECHANICAL STANDARDS AND DRAWING INDEX

PRELIMINARY ☐
DESIGN DEVELOPMENT ☐
CONSTRUCTION ■
FINAL RECORD ☐

DRAWN BY: JRM
CHECKED BY: SVM

REVISIONS:

DATE: 12-15-17

SHEET NO.: M0.1BV

JOB NO.: 171712A

g:\2015\2015-0144-00\Cad\beechview es\2015-0144-BV-M0-IND.dwg, M0.1BV, 12/12/2017 2:30:04 PM, Suha A. Matti, _Default.pc3 ,0.09094, Peter Basso Associates Inc.

THE FOLLOWING DIMENSION EQUALS ONE INCH WHEN PRINTED TO SCALE.

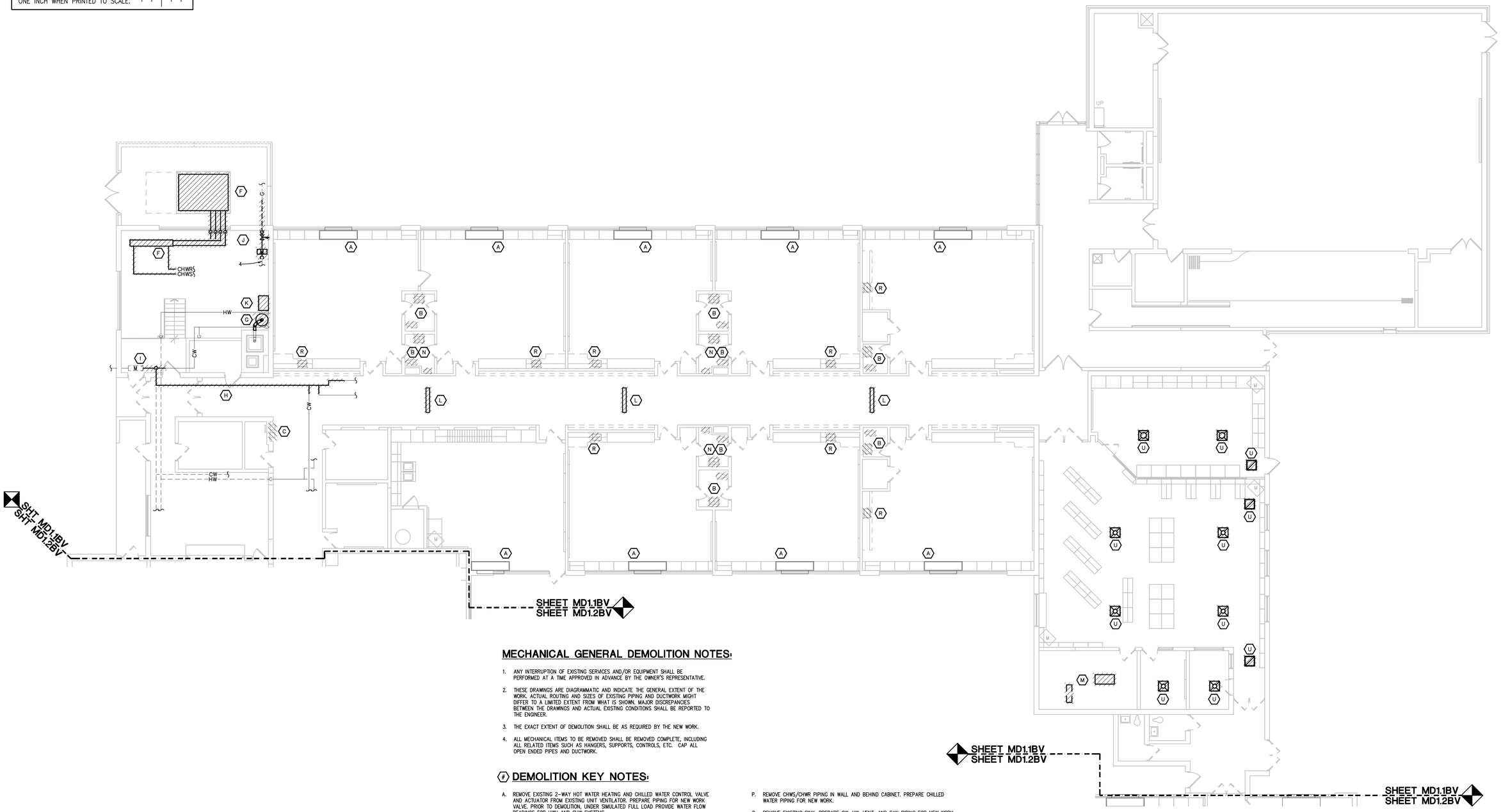

MECHANICAL GENERAL DEMOLITION NOTES:

1. ANY INTERRUPTION OF EXISTING SERVICES AND/OR EQUIPMENT SHALL BE PERFORMED AT A TIME APPROVED IN ADVANCE BY THE OWNER'S REPRESENTATIVE.
2. THESE DRAWINGS ARE DIAGRAMMATIC AND INDICATE THE GENERAL EXTENT OF THE WORK. ACTUAL ROUTING AND SIZES OF EXISTING PIPING AND DUCTWORK MIGHT DIFFER TO A LIMITED EXTENT FROM WHAT IS SHOWN. MAJOR DISCREPANCIES BETWEEN THE DRAWINGS AND ACTUAL EXISTING CONDITIONS SHALL BE REPORTED TO THE ENGINEER.
3. THE EXACT EXTENT OF DEMOLITION SHALL BE AS REQUIRED BY THE NEW WORK.
4. ALL MECHANICAL ITEMS TO BE REMOVED SHALL BE REMOVED COMPLETE, INCLUDING ALL RELATED ITEMS SUCH AS HANGERS, SUPPORTS, CONTROLS, ETC. CAP ALL OPEN ENDED PIPES AND DUCTWORK.

DEMOLITION KEY NOTES:

A. REMOVE EXISTING 2-WAY HOT WATER HEATING AND CHILLED WATER CONTROL VALVE AND ACTUATOR FROM EXISTING UNIT VENTILATOR. PREPARE PIPING FOR NEW WORK VALVE. PRIOR TO DEMOLITION, UNDER SIMULATED FULL LOAD PROVIDE WATER FLOW READINGS FOR HWH AND CHW SYSTEMS.

B. REMOVE EXISTING PLUMBING FIXTURE INCLUDING FLUSH VALVE AND FAUCET. PREPARE CW, HW, SAN, AND VENT PIPING FOR NEW WORK.

C. REMOVE EXISTING DRINKING FOUNTAIN AND PREPARE CW AND SAN PIPING FOR NEW WORK.

D. REMOVE EXISTING FINNED TUBE RADIATION AND CONTROLS COMPLETE. REMOVE HOT WATER HEATING PIPING BACK TO SOURCE AND CAP.

E. REMOVE WALL MOUNTED AIR CONDITIONER, REFRIGERANT PIPING, AND ROOF MOUNTED CONDENSER. CAP REFRIGERANT PIPING ROOF PORTAL.

F. REMOVE AIR COOLED CHILLER, INDOOR EVAPORATOR BUNDLE, REFRIGERANT PIPING, AND CONTROLS COMPLETE. PREPARE CHILLED WATER PIPING FOR NEW WORK. PRIOR TO DEMOLITION, UNDER SIMULATED LOAD. PROVIDE WATER FLOW READINGS FOR CHILLED WATER.

G. REMOVE DOMESTIC WATER HEATER, FLUE, AND CONTROLS COMPLETE. PREPARE CW AND HW FOR NEW WORK.

H. REMOVE GALVANIZED STEEL DOMESTIC WATER PIPING. PREPARE DOMESTIC WATER PIPING FOR NEW WORK.

I. REMOVE GALVANIZED PIPING BACK TO WATER METER. PREPARE PIPING FOR NEW WORK.

J. REMOVE/RELOCATE EXISTING GAS METER ASSEMBLY. REFER TO NEW WORK PLAN AND DETAIL FOR NEW LAYOUT.

K. REMOVE EXISTING JCI NETWORK CONTROLLER AND PREPARE FOR NEW JCI FACILITY CONTROLLER.

L. REMOVE EXISTING RELIEF HOOD. PREPARE EXISTING ROOF CURB FOR NEW WORK.

M. REMOVE EXISTING AIR CONDITIONING UNIT, REFRIGERANT PIPING, CONDENSING UNIT, AND CONTROLS COMPLETE. EXISTING 37 1/2" x 20" CURB TO REMAIN.

N. REMOVE URINAL AND FLUSH VALVE COMPLETE. REMOVE CW AND SAN BACK TO SOURCE AND CAP. CAP SAN PIPE BELOW FLOOR IN A CONCEALED MANOR.

O. REMOVE EXISTING EXHAUST GRILLE AND DUCTWORK. EXISTING EXHAUST FAN AND CURB TO REMAIN. PREPARE EXHAUST FAN FOR NEW DUCTWORK.

P. REMOVE CHWS/CHWR PIPING IN WALL AND BEHIND CABINET. PREPARE CHILLED WATER PIPING FOR NEW WORK.

Q. REMOVE EXISTING SINK. PREPARE CW, HW, VENT, AND SAN PIPING FOR NEW WORK.

R. REMOVE EXISTING COUNTER MOUNTED CLASSROOM SINK. PREPARE CW, HW, SAN AND VENT PIPE ROUGH IN FOR NEW WORK.

S. REMOVE EXISTING CONVECTOR AND CONTROLS COMPLETE. REMOVE HWHS/R BACK TO SOURCE AND CAP.

T. REMOVE FLOOR MOUNTED URINALS INCLUDING FLUSH VALVE. PREPARE CW, SAN, AND VENT PIPING FOR NEW WORK.

U. REMOVE EXISTING SUPPLY DIFFUERS AND RETURN GRILLES. PREPARE EXISTING DUCTWORK FOR NEW WORK.

MECHANICAL DEMOLITION PLAN - AREA 'A'

SCALE: 1/8" = 1' - 0"

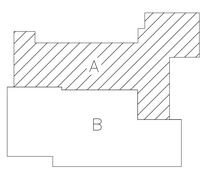

KEY PLAN

WAKELY ASSOCIATES, INC.
ARCHITECTS & ENGINEERS

30500 VAN DYKE AVE.
SUITE M-7
WARREN, MICHIGAN, 48093

TEL. 586-573-4100
FAX. 586-573-0822
E-MAIL: WA@WAKELYAIA.COM

Peter Basso Associates Inc
CONSULTING ENGINEERS
5145 Livernois, Suite 100
Troy, Michigan 48098-3276
Tel: 248-879-5668
Fax: 248-879-0007
www.PeterBassoAssociates.com
PBA Project No.: 2015-0144

FARMINGTON PUBLIC SCHOOLS - 2015 BOND
2018 PROJECTS
KENBROOK & BEECHVIEW ELEMENTARY SCHOOLS

BEECHVIEW ELEMENTARY SCHOOL

MECHANICAL DEMOLITION PLAN - AREA 'A'

PRELIMINARY ☐
DESIGN DEVELOPMENT ☐
CONSTRUCTION ■
FINAL RECORD ☐

DRAWN BY: JRM
CHECKED BY: SVM

REVISIONS:

DATE: 12-15-17

SHEET NO.:

MD1.1BV

JOB NO.: 171712A

g:\2015\2015-0144-00\Cad\beechview es\2015-0144-BV-MD1-DP1.dwg, MD1.1BV, 12/12/2017 2:30:14 PM, Suha A. Matti, _Default.pc3 0.09094, Peter Basso Associates Inc.

THE FOLLOWING DIMENSION EQUALS ONE INCH WHEN PRINTED TO SCALE. 1"

MECHANICAL GENERAL DEMOLITION NOTES:

1. ANY INTERRUPTION OF EXISTING SERVICES AND/OR EQUIPMENT SHALL BE PERFORMED AT A TIME APPROVED IN ADVANCE BY THE OWNER'S REPRESENTATIVE.
2. THESE DRAWINGS ARE DIAGRAMMATIC AND INDICATE THE GENERAL EXTENT OF THE WORK. ACTUAL ROUTING AND SIZES OF EXISTING PIPING AND DUCTWORK MIGHT DIFFER TO A LIMITED EXTENT FROM WHAT IS SHOWN. MAJOR DISCREPANCIES BETWEEN THE DRAWINGS AND ACTUAL EXISTING CONDITIONS SHALL BE REPORTED TO THE ENGINEER.
3. THE EXACT EXTENT OF DEMOLITION SHALL BE AS REQUIRED BY THE NEW WORK.
4. ALL MECHANICAL ITEMS TO BE REMOVED SHALL BE REMOVED COMPLETE, INCLUDING ALL RELATED ITEMS SUCH AS HANGERS, SUPPORTS, CONTROLS, ETC. CAP ALL OPEN ENDED PIPES AND DUCTWORK.

(#) DEMOLITION KEY NOTES:

A. REMOVE EXISTING 2-WAY HOT WATER HEATING AND CHILLED WATER CONTROL VALVE AND ACTUATOR FROM EXISTING UNIT VENTILATOR. PREPARE PIPING FOR NEW WORK VALVE. PRIOR TO DEMOLITION, UNDER SIMULATED FULL LOAD PROVIDE WATER FLOW READINGS FOR HWH AND CHW SYSTEMS.

B. REMOVE EXISTING PLUMBING FIXTURE INCLUDING FLUSH VALVE AND FAUCET. PREPARE CW, HW, SAN, AND VENT PIPING FOR NEW WORK.

C. REMOVE EXISTING DRINKING FOUNTAIN AND PREPARE CW AND SAN PIPING FOR NEW WORK.

D. REMOVE EXISTING FINNED TUBE RADIATION AND CONTROLS COMPLETE. REMOVE HOT WATER HEATING PIPING BACK TO SOURCE AND CAP.

E. REMOVE WALL MOUNTED AIR CONDITIONER, REFRIGERANT PIPING, AND ROOF MOUNTED CONDENSER. CAP REFRIGERANT PIPING ROOF PORTAL.

F. REMOVE AIR COOLED CHILLER, INDOOR EVAPORATOR BUNDLE, REFRIGERANT PIPING, AND CONTROLS COMPLETE. PREPARE CHILLED WATER PIPING FOR NEW WORK. PRIOR TO DEMOLITION, UNDER SIMULATED LOAD. PROVIDE WATER FLOW READINGS FOR CHILLED WATER.

G. REMOVE DOMESTIC WATER HEATER, FLUE, AND CONTROLS COMPLETE. PREPARE CW AND HW FOR NEW WORK.

H. REMOVE GALVANIZED STEEL DOMESTIC WATER PIPING. PREPARE DOMESTIC WATER PIPING FOR NEW WORK.

I. REMOVE GALVANIZED PIPING BACK TO WATER METER. PREPARE PIPING FOR NEW WORK.

J. REMOVE/RELOCATE EXISTING GAS METER ASSEMBLY. REFER TO NEW WORK PLAN AND DETAIL FOR NEW LAYOUT.

K. REMOVE EXISTING JCI NETWORK CONTROLLER AND PREPARE FOR NEW JCI FACILITY CONTROLLER.

L. REMOVE EXISTING RELIEF HOOD. PREPARE EXISTING ROOF CURB FOR NEW WORK.

M. REMOVE EXISTING AIR CONDITIONING UNIT, REFRIGERANT PIPING, CONDENSING UNIT, AND CONTROLS COMPLETE. EXISTING 37 1/2" x 20" CURB TO REMAIN.

N. REMOVE URINAL AND FLUSH VALVE COMPLETE. REMOVE CW AND SAN BACK TO SOURCE AND CAP. CAP SAN PIPE BELOW FLOOR IN A CONCEALED MANOR.

O. REMOVE EXISTING EXHAUST GRILLE AND DUCTWORK. EXISTING EXHAUST FAN AND CURB TO REMAIN. PREPARE EXHAUST FAN FOR NEW DUCTWORK.

P. REMOVE CHWS/CHWR PIPING IN WALL AND BEHIND CABINET. PREPARE CHILLED WATER PIPING FOR NEW WORK.

Q. REMOVE EXISTING SINK. PREPARE CW, HW, VENT, AND SAN PIPING FOR NEW WORK.

R. REMOVE EXISTING COUNTER MOUNTED CLASSROOM SINK. PREPARE CW, HW, SAN AND VENT PIPE ROUGH IN FOR NEW WORK.

S. REMOVE EXISTING CONVECTOR AND CONTROLS COMPLETE. REMOVE HWHS/R BACK TO SOURCE AND CAP.

T. REMOVE FLOOR MOUNTED URINALS INCLUDING FLUSH VALVE. PREPARE CW, SAN, AND VENT PIPING FOR NEW WORK.

U. REMOVE EXISTING SUPPLY DIFFUERS AND RETURN GRILLES. PREPARE EXISTING DUCTWORK FOR NEW WORK.

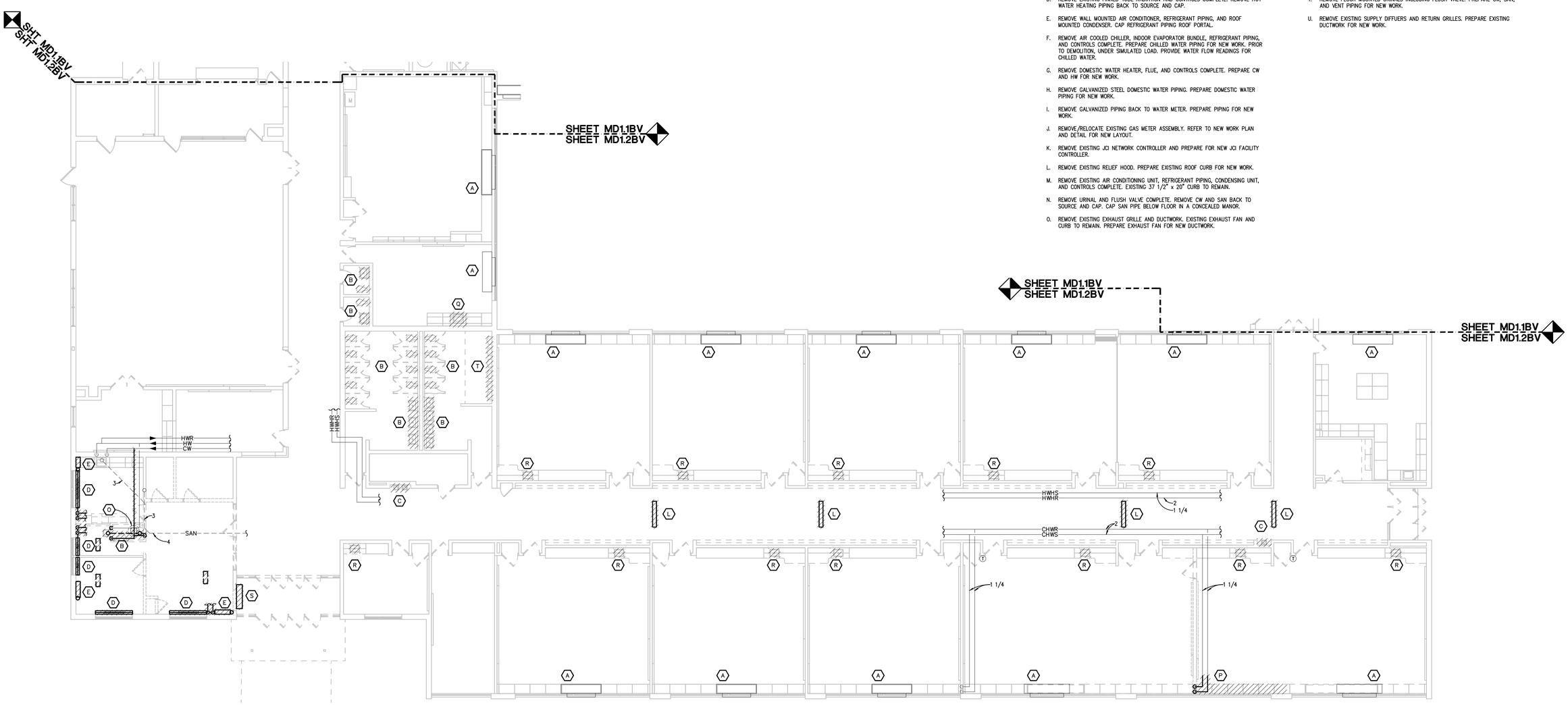

MECHANICAL DEMOLITION PLAN - AREA 'B'

SCALE: 1/8" = 1' - 0"

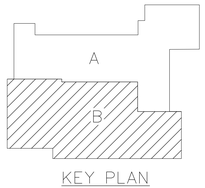

KEY PLAN

WAKELY ASSOCIATES, INC.
ARCHITECTS & ENGINEERS

30500 VAN DYKE AVE.
SUITE M-7
WARREN, MICHIGAN, 48093

TEL. 586-573-4100
FAX. 586-573-0822
E-MAIL: WA@WAKELYAIA.COM

Peter Basso Associates Inc
CONSULTING ENGINEERS
5145 Livernois, Suite 100
Troy, Michigan 48098-3276
Tel: 248-879-5668
Fax: 248-879-0007
www.PeterBassoAssociates.com
PBA Project No.: 2015-0144

FARMINGTON PUBLIC SCHOOLS - 2015 BOND
2018 PROJECTS
KENBROOK & BEECHVIEW ELEMENTARY SCHOOLS

BEECHVIEW ELEMENTARY SCHOOL

MECHANICAL DEMOLITION PLAN - AREA 'B'

PRELIMINARY ☐
DESIGN DEVELOPMENT ☐
CONSTRUCTION ■
FINAL RECORD ☐

DRAWN BY: JRM
CHECKED BY: SVM

REVISIONS:

DATE: 12-15-17

SHEET NO.:

MD1.2BV

JOB NO.: 171712A

g:\2015\2015-0144-00\Cad\beechview es\2015-0144-BV-MD1-DP1.dwg, MD1.2BV, 12/12/2017 2:30:16 PM, Suha A. Matti, _Default.pc3 ,0.09094, Peter Basso Associates Inc.

THE FOLLOWING DIMENSION EQUALS ONE INCH WHEN PRINTED TO SCALE. 1"

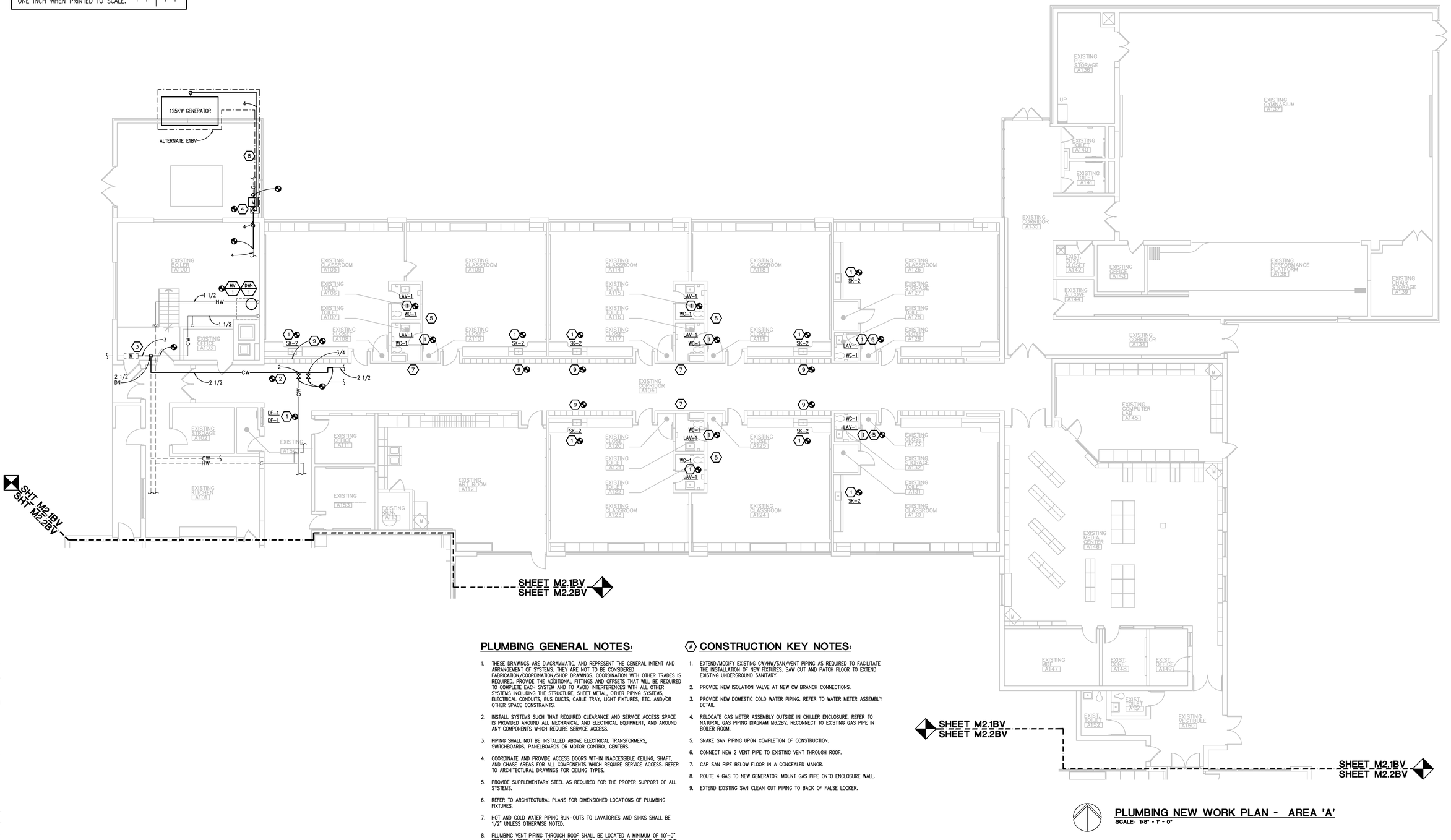

PLUMBING GENERAL NOTES:

1. THESE DRAWINGS ARE DIAGRAMMATIC, AND REPRESENT THE GENERAL INTENT AND ARRANGEMENT OF SYSTEMS. THEY ARE NOT TO BE CONSIDERED FABRICATION/COORDINATION/SHOP DRAWINGS. COORDINATION WITH OTHER TRADES IS REQUIRED. PROVIDE THE ADDITIONAL FITTINGS AND OFFSETS THAT WILL BE REQUIRED TO COMPLETE EACH SYSTEM AND TO AVOID INTERFERENCES WITH ALL OTHER SYSTEMS INCLUDING THE STRUCTURE, SHEET METAL, OTHER PIPING SYSTEMS, ELECTRICAL CONDUITS, BUS DUCTS, CABLE TRAY, LIGHT FIXTURES, ETC. AND/OR OTHER SPACE CONSTRAINTS.
2. INSTALL SYSTEMS SUCH THAT REQUIRED CLEARANCE AND SERVICE ACCESS SPACE IS PROVIDED AROUND ALL MECHANICAL AND ELECTRICAL EQUIPMENT, AND AROUND ANY COMPONENTS WHICH REQUIRE SERVICE ACCESS.
3. PIPING SHALL NOT BE INSTALLED ABOVE ELECTRICAL TRANSFORMERS, SWITCHBOARDS, PANELBOARDS OR MOTOR CONTROL CENTERS.
4. COORDINATE AND PROVIDE ACCESS DOORS WITHIN INACCESSIBLE CEILING, SHAFT, AND CHASE AREAS FOR ALL COMPONENTS WHICH REQUIRE SERVICE ACCESS. REFER TO ARCHITECTURAL DRAWINGS FOR CEILING TYPES.
5. PROVIDE SUPPLEMENTARY STEEL AS REQUIRED FOR THE PROPER SUPPORT OF ALL SYSTEMS.
6. REFER TO ARCHITECTURAL PLANS FOR DIMENSIONED LOCATIONS OF PLUMBING FIXTURES.
7. HOT AND COLD WATER PIPING RUN-OUTS TO LAVATORIES AND SINKS SHALL BE 1/2" UNLESS OTHERWISE NOTED.
8. PLUMBING VENT PIPING THROUGH ROOF SHALL BE LOCATED A MINIMUM OF 10'-0" FROM ANY FRESH AIR INTAKE LOCATION AND A MINIMUM OF 18" CLEAR FROM THE INSIDE FACE OF PARAPET.
9. PROVIDE CODE REQUIRED CLEARANCE FOR ALL CLEANOUTS INSTALLED IN SANITARY WASTE AND VENT PIPING.
10. MINIMUM UNDERGROUND PIPE SIZE SHALL BE 3".
11. WATER SERVICE ENTRANCE PIPING SHALL BE BURIED WITH DEPTH OF COVER OVER TOP OF PIPE OF AT LEAST _ OR WITH TOP OF PIPE AT LEAST 12" BELOW LEVEL OF MAXIMUM FROST PENETRATION, OR AS REQUIRED BY AUTHORITIES HAVING JURISDICTION, WHICHEVER IS DEEPEST.

(#) CONSTRUCTION KEY NOTES:

1. EXTEND/MODIFY EXISTING CW/HW/SAN/VENT PIPING AS REQUIRED TO FACILITATE THE INSTALLATION OF NEW FIXTURES. SAW CUT AND PATCH FLOOR TO EXTEND EXISTING UNDERGROUND SANITARY.
2. PROVIDE NEW ISOLATION VALVE AT NEW CW BRANCH CONNECTIONS.
3. PROVIDE NEW DOMESTIC COLD WATER PIPING. REFER TO WATER METER ASSEMBLY DETAIL.
4. RELOCATE GAS METER ASSEMBLY OUTSIDE IN CHILLER ENCLOSURE. REFER TO NATURAL GAS PIPING DIAGRAM M6.2BV. RECONNECT TO EXISTING GAS PIPE IN BOILER ROOM.
5. SNAKE SAN PIPING UPON COMPLETION OF CONSTRUCTION.
6. CONNECT NEW 2 VENT PIPE TO EXISTING VENT THROUGH ROOF.
7. CAP SAN PIPE BELOW FLOOR IN A CONCEALED MANOR.
8. ROUTE 4 GAS TO NEW GENERATOR. MOUNT GAS PIPE ONTO ENCLOSURE WALL.
9. EXTEND EXISTING SAN CLEAN OUT PIPING TO BACK OF FALSE LOCKER.

PLUMBING NEW WORK PLAN - AREA 'A'

SCALE: 1/8" = 1' - 0"

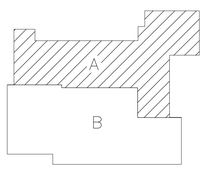

KEY PLAN

WAKELY ASSOCIATES, INC.
ARCHITECTS & ENGINEERS

30500 VAN DYKE AVE.
SUITE M-7
WARREN, MICHIGAN, 48093

TEL. 586-573-4100
FAX. 586-573-0822
E-MAIL: WA@WAKELYAIA.COM

Peter Basso Associates Inc
CONSULTING ENGINEERS
5145 Livernois, Suite 100
Troy, Michigan 48098-3276
Tel: 248-879-5668
Fax: 248-879-0007
www.PeterBassoAssociates.com
PBA Project No.: 2015-0144

FARMINGTON PUBLIC SCHOOLS - 2015 BOND
2018 PROJECTS
KENBROOK & BEECHVIEW ELEMENTARY SCHOOLS

BEECHVIEW ELEMENTARY SCHOOL

PLUMBING NEW WORK PLAN - AREA 'A'

PRELIMINARY ☐
DESIGN DEVELOPMENT ☐
CONSTRUCTION ■
FINAL RECORD ☐

DRAWN BY: JRM
CHECKED BY: SVM

REVISIONS:

DATE: 12-15-17

SHEET NO.: M2.1BV

JOB NO.: 171712A

g:\2015\2015-0144-00\Cad\beechview es\2015-0144-BV-M2-PL1.dwg, M2.1BV, 12/12/2017 2:30:26 PM, Suha A. Matti, _Default.pc3 .0.09094, Peter Basso Associates Inc.

THE FOLLOWING DIMENSION EQUALS ONE INCH WHEN PRINTED TO SCALE. 1"

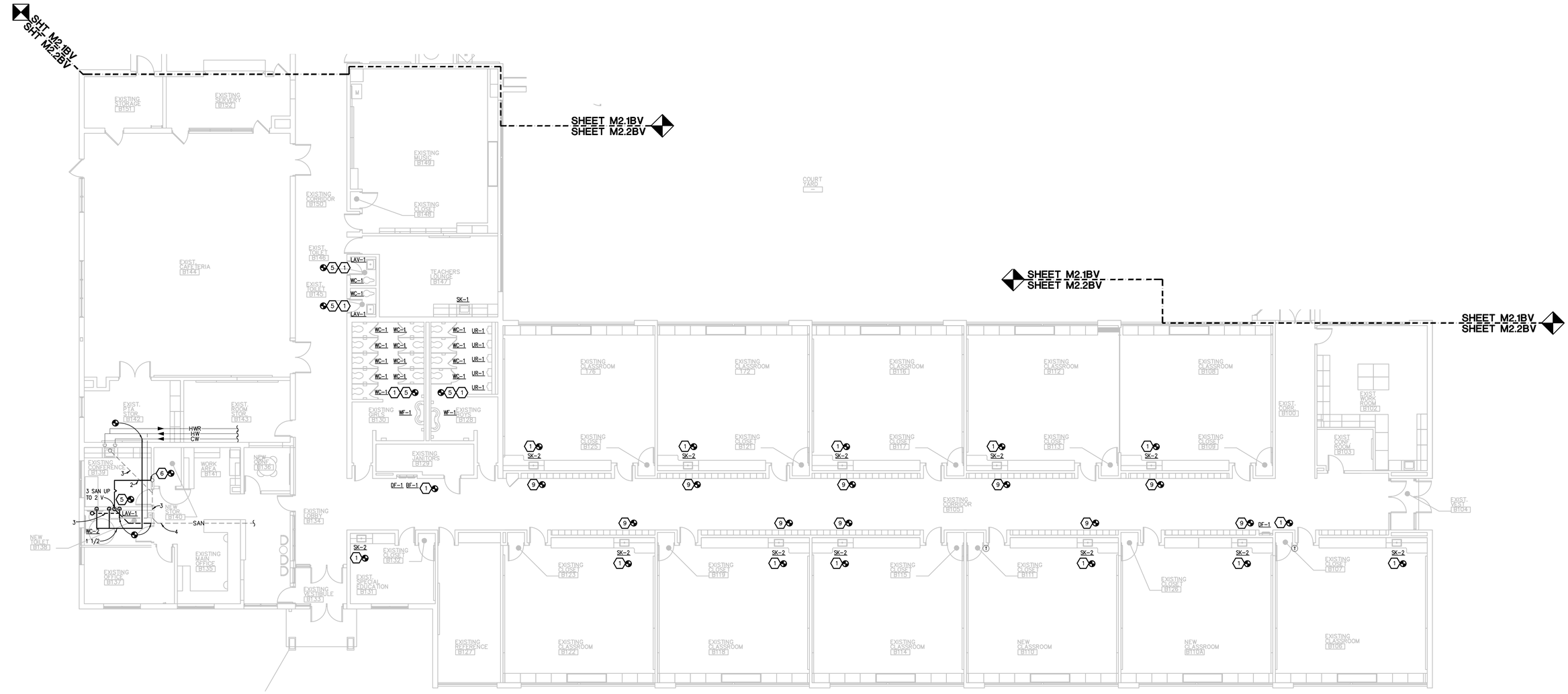

PLUMBING NEW WORK PLAN - AREA 'B'

SCALE: 1/8" = 1' - 0"

PLUMBING GENERAL NOTES:

1. THESE DRAWINGS ARE DIAGRAMMATIC, AND REPRESENT THE GENERAL INTENT AND ARRANGEMENT OF SYSTEMS. THEY ARE NOT TO BE CONSIDERED FABRICATION/COORDINATION/SHOP DRAWINGS. COORDINATION WITH OTHER TRADES IS REQUIRED. PROVIDE THE ADDITIONAL FITTINGS AND OFFSETS THAT WILL BE REQUIRED TO COMPLETE EACH SYSTEM AND TO AVOID INTERFERENCES WITH ALL OTHER SYSTEMS INCLUDING THE STRUCTURE, SHEET METAL, OTHER PIPING SYSTEMS, ELECTRICAL CONDUITS, BUS DUCTS, CABLE TRAY, LIGHT FIXTURES, ETC. AND/OR OTHER SPACE CONSTRAINTS.
2. INSTALL SYSTEMS SUCH THAT REQUIRED CLEARANCE AND SERVICE ACCESS SPACE IS PROVIDED AROUND ALL MECHANICAL AND ELECTRICAL EQUIPMENT, AND AROUND ANY COMPONENTS WHICH REQUIRE SERVICE ACCESS.
3. PIPING SHALL NOT BE INSTALLED ABOVE ELECTRICAL TRANSFORMERS, SWITCHBOARDS, PANELBOARDS OR MOTOR CONTROL CENTERS.
4. COORDINATE AND PROVIDE ACCESS DOORS WITHIN INACCESSIBLE CEILING, SHAFT, AND CHASE AREAS FOR ALL COMPONENTS WHICH REQUIRE SERVICE ACCESS. REFER TO ARCHITECTURAL DRAWINGS FOR CEILING TYPES.
5. PROVIDE SUPPLEMENTARY STEEL AS REQUIRED FOR THE PROPER SUPPORT OF ALL SYSTEMS.
6. REFER TO ARCHITECTURAL PLANS FOR DIMENSIONED LOCATIONS OF PLUMBING FIXTURES.
7. HOT AND COLD WATER PIPING RUN-OUTS TO LAVATORIES AND SINKS SHALL BE 1/2" UNLESS OTHERWISE NOTED.
8. PLUMBING VENT PIPING THROUGH ROOF SHALL BE LOCATED A MINIMUM OF 10'-0" FROM ANY FRESH AIR INTAKE LOCATION AND A MINIMUM OF 18" CLEAR FROM THE INSIDE FACE OF PARAPET.
9. PROVIDE CODE REQUIRED CLEARANCE FOR ALL CLEANOUTS INSTALLED IN SANITARY WASTE AND VENT PIPING.
10. MINIMUM UNDERGROUND PIPE SIZE SHALL BE 3".
11. WATER SERVICE ENTRANCE PIPING SHALL BE BURIED WITH DEPTH OF COVER OVER TOP OF PIPE OF AT LEAST , OR WITH TOP OF PIPE AT LEAST 12" BELOW LEVEL OF MAXIMUM FROST PENETRATION, OR AS REQUIRED BY AUTHORITIES HAVING JURISDICTION, WHICHEVER IS DEEPEST.

CONSTRUCTION KEY NOTES:

1. EXTEND/MODIFY EXISTING CW/HW/SAN/VENT PIPING AS REQUIRED TO FACILITATE THE INSTALLATION OF NEW FIXTURES. SAW CUT AND PATCH FLOOR TO EXTEND EXISTING UNDERGROUND SANITARY.
2. PROVIDE NEW ISOLATION VALVE AT NEW CW BRANCH CONNECTIONS.
3. PROVIDE NEW DOMESTIC COLD WATER PIPING. REFER TO WATER METER ASSEMBLY DETAIL.
4. RELOCATE GAS METER ASSEMBLY OUTSIDE IN CHILLER ENCLOSURE. REFER TO NATURAL GAS PIPING DIAGRAM M6.2BV. RECONNECT TO EXISTING GAS PIPE IN BOILER ROOM.
5. SNAKE SAN PIPING UPON COMPLETION OF CONSTRUCTION.
6. CONNECT NEW 2 VENT PIPE TO EXISTING VENT THROUGH ROOF.
7. CAP SAN PIPE BELOW FLOOR IN A CONCEALED MANOR.
8. ROUTE 4 GAS TO NEW GENERATOR. MOUNT GAS PIPE ONTO ENCLOSURE WALL.
9. EXTEND EXISTING SAN CLEAN OUT PIPING TO BACK OF FALSE LOCKER.

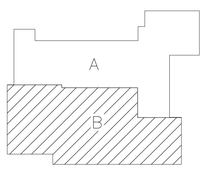

KEY PLAN

WAKELY ASSOCIATES, INC.
ARCHITECTS & ENGINEERS

30500 VAN DYKE AVE.
SUITE M-7
WARREN, MICHIGAN, 48093

TEL. 586-573-4100
FAX. 586-573-0822
E-MAIL: WA@WAKELYAIA.COM

Peter Basso Associates Inc
CONSULTING ENGINEERS
5145 Livernois, Suite 100
Troy, Michigan 48098-3276
Tel: 248-879-5668
Fax: 248-879-0007
www.PeterBassoAssoc-ates.com
PBA Project No.: 2015-0144

FARMINGTON PUBLIC SCHOOLS - 2015 BOND
2018 PROJECTS
KENBROOK & BEECHVIEW ELEMENTARY SCHOOLS

BEECHVIEW ELEMENTARY SCHOOL

PLUMBING NEW WORK PLAN - AREA 'B'

PRELIMINARY ☐
DESIGN DEVELOPMENT ☐
CONSTRUCTION ■
FINAL RECORD ☐

DRAWN BY: JRM
CHECKED BY: SVM

REVISIONS:

DATE: 12-15-17

SHEET NO.:

M2.2BV

JOB NO.: 171712A

g:\2015\2015-0144-00\Cad\beechview es\2015-0144-BV-M2-PL1.dwg, M2.2BV, 12/12/2017 2:30:27 PM, Suha A. Matti, _Default.pc3 ,0.09094, Peter Basso Associates Inc.

THE FOLLOWING DIMENSION EQUALS ONE INCH WHEN PRINTED TO SCALE. 1"

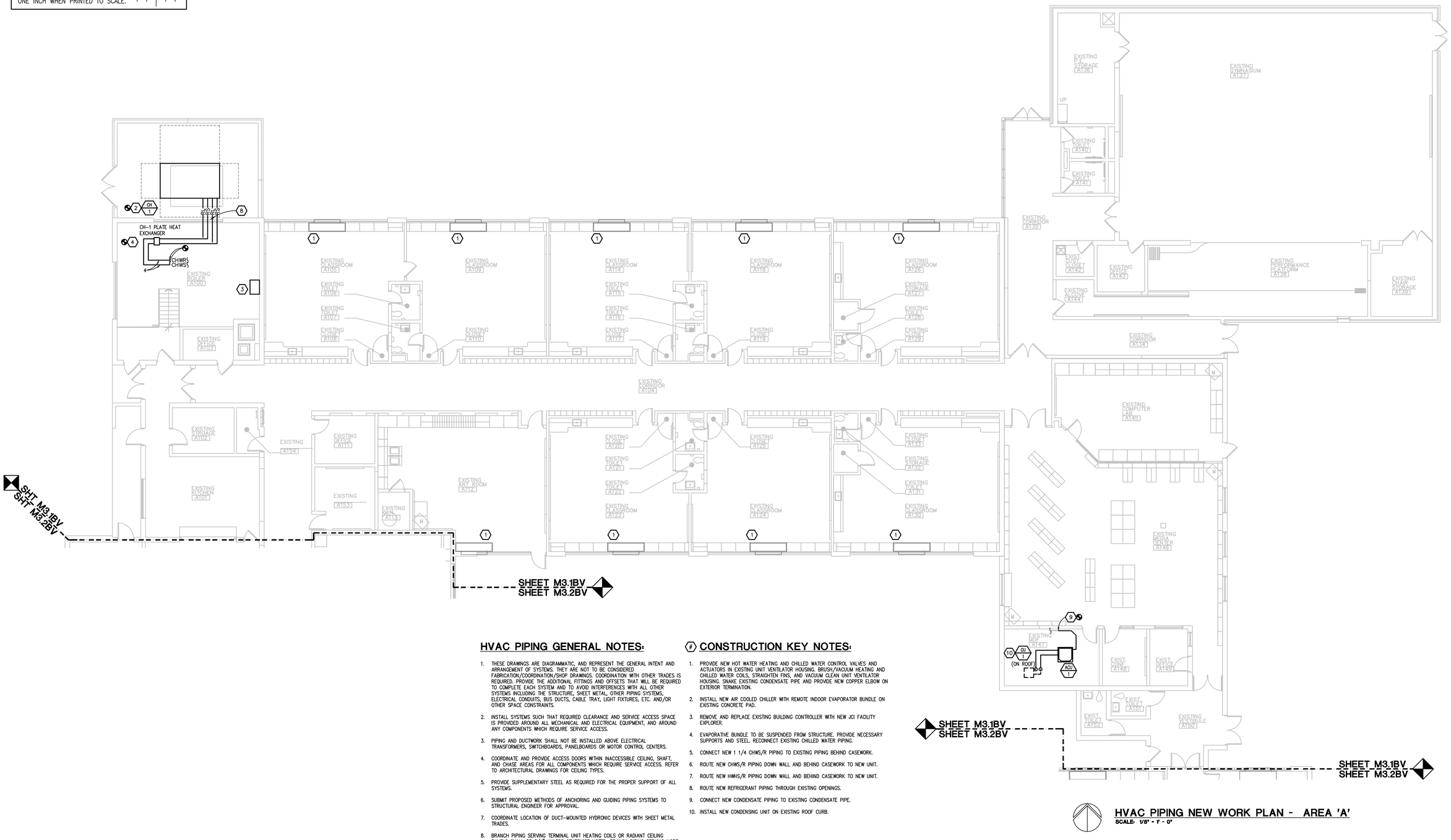

HVAC PIPING GENERAL NOTES:

1. THESE DRAWINGS ARE DIAGRAMMATIC, AND REPRESENT THE GENERAL INTENT AND ARRANGEMENT OF SYSTEMS. THEY ARE NOT TO BE CONSIDERED FABRICATION/COORDINATION/SHOP DRAWINGS. COORDINATION WITH OTHER TRADES IS REQUIRED. PROVIDE THE ADDITIONAL FITTINGS AND OFFSETS THAT WILL BE REQUIRED TO COMPLETE EACH SYSTEM AND TO AVOID INTERFERENCES WITH ALL OTHER SYSTEMS INCLUDING THE STRUCTURE, SHEET METAL, OTHER PIPING SYSTEMS, ELECTRICAL CONDUITS, BUS DUCTS, CABLE TRAY, LIGHT FIXTURES, ETC. AND/OR OTHER SPACE CONSTRAINTS.
2. INSTALL SYSTEMS SUCH THAT REQUIRED CLEARANCE AND SERVICE ACCESS SPACE IS PROVIDED AROUND ALL MECHANICAL AND ELECTRICAL EQUIPMENT, AND AROUND ANY COMPONENTS WHICH REQUIRE SERVICE ACCESS.
3. PIPING AND DUCTWORK SHALL NOT BE INSTALLED ABOVE ELECTRICAL TRANSFORMERS, SWITCHBOARDS, PANELBOARDS OR MOTOR CONTROL CENTERS.
4. COORDINATE AND PROVIDE ACCESS DOORS WITHIN INACCESSIBLE CEILING, SHAFT, AND CHASE AREAS FOR ALL COMPONENTS WHICH REQUIRE SERVICE ACCESS. REFER TO ARCHITECTURAL DRAWINGS FOR CEILING TYPES.
5. PROVIDE SUPPLEMENTARY STEEL AS REQUIRED FOR THE PROPER SUPPORT OF ALL SYSTEMS.
6. SUBMIT PROPOSED METHODS OF ANCHORING AND GUIDING PIPING SYSTEMS TO STRUCTURAL ENGINEER FOR APPROVAL.
7. COORDINATE LOCATION OF DUCT-MOUNTED HYDRONIC DEVICES WITH SHEET METAL TRADES.
8. BRANCH PIPING SERVING TERMINAL UNIT HEATING COILS OR RADIANT CEILING PANELS SHALL BE 3/4" UNLESS OTHERWISE NOTED. BRANCH PIPING SERVING MORE THAN ONE TERMINAL UNIT HEATING COIL SHALL BE 1" UNLESS OTHERWISE NOTED. BRANCH PIPING SERVING HOT WATER UNIT HEATERS AND CABINET UNIT HEATERS SHALL BE 1" UNLESS OTHERWISE NOTED.
9. MOUNT THERMOSTATS 48" A.F.F., UNLESS OTHERWISE NOTED. LOCATE AS CLOSE AS POSSIBLE TO DOOR WHEN INDICATED NEAR DOOR. COORDINATE EXACT LOCATION WITH ALL OTHER TRADES.

CONSTRUCTION KEY NOTES:

1. PROVIDE NEW HOT WATER HEATING AND CHILLED WATER CONTROL VALVES AND ACTUATORS IN EXISTING UNIT VENTILATOR HOUSING. BRUSH/VACUUM HEATING AND CHILLED WATER COILS, STRAIGHTEN FINS, AND VACUUM CLEAN UNIT VENTILATOR HOUSING. SNAKE EXISTING CONDENSATE PIPE AND PROVIDE NEW COPPER ELBOW ON EXTERIOR TERMINATION.
2. INSTALL NEW AIR COOLED CHILLER WITH REMOTE INDOOR EVAPORATOR BUNDLE ON EXISTING CONCRETE PAD.
3. REMOVE AND REPLACE EXISTING BUILDING CONTROLLER WITH NEW JCI FACILITY EXPLORER.
4. EVAPORATIVE BUNDLE TO BE SUSPENDED FROM STRUCTURE. PROVIDE NECESSARY SUPPORTS AND STEEL. RECONNECT EXISTING CHILLED WATER PIPING.
5. CONNECT NEW 1 1/4 CHWS/R PIPING TO EXISTING PIPING BEHIND CASEWORK.
6. ROUTE NEW CHWS/R PIPING DOWN WALL AND BEHIND CASEWORK TO NEW UNIT.
7. ROUTE NEW HWHS/R PIPING DOWN WALL AND BEHIND CASEWORK TO NEW UNIT.
8. ROUTE NEW REFRIGERANT PIPING THROUGH EXISTING OPENINGS.
9. CONNECT NEW CONDENSATE PIPING TO EXISTING CONDENSATE PIPE.
10. INSTALL NEW CONDENSING UNIT ON EXISTING ROOF CURB.

HVAC PIPING NEW WORK PLAN - AREA 'A'

SCALE: 1/8" = 1' - 0"

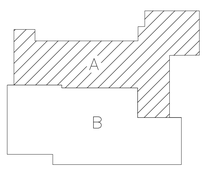

KEY PLAN

WAKELY ASSOCIATES, INC.
ARCHITECTS & ENGINEERS

30500 VAN DYKE AVE.
SUITE M-7
WARREN, MICHIGAN, 48093

TEL. 586-573-4100
FAX. 586-573-0822
E-MAIL: WA@WAKELYAIA.COM

Peter Basso Associates Inc
CONSULTING ENGINEERS
5145 Livernois, Suite 100
Troy, Michigan 48098-3276
Tel: 248-879-5668
Fax: 248-879-0007
www.PeterBassoAssociates.com
PBA Project No.: 2015-0144

FARMINGTON PUBLIC SCHOOLS - 2015 BOND
2018 PROJECTS
KENBROOK & BEECHVIEW ELEMENTARY SCHOOLS

BEECHVIEW ELEMENTARY SCHOOL

HVAC PIPING NEW WORK PLAN - AREA 'A'

PRELIMINARY ☐
DESIGN DEVELOPMENT ☐
CONSTRUCTION ■
FINAL RECORD ☐

DRAWN BY: JRM
CHECKED BY: SVM

REVISIONS:

DATE: 12-15-17

SHEET NO.: M3.1BV

JOB NO.: 171712A

g:\2015\2015-0144-00\Cad\beechview es\2015-0144-BV-M3-HP1.dwg, M3.1BV, 12/12/2017 2:30:37 PM, Suha A. Matti, _Default.pc3 .0.09094, Peter Basso Associates Inc.

THE FOLLOWING DIMENSION EQUALS ONE INCH WHEN PRINTED TO SCALE.

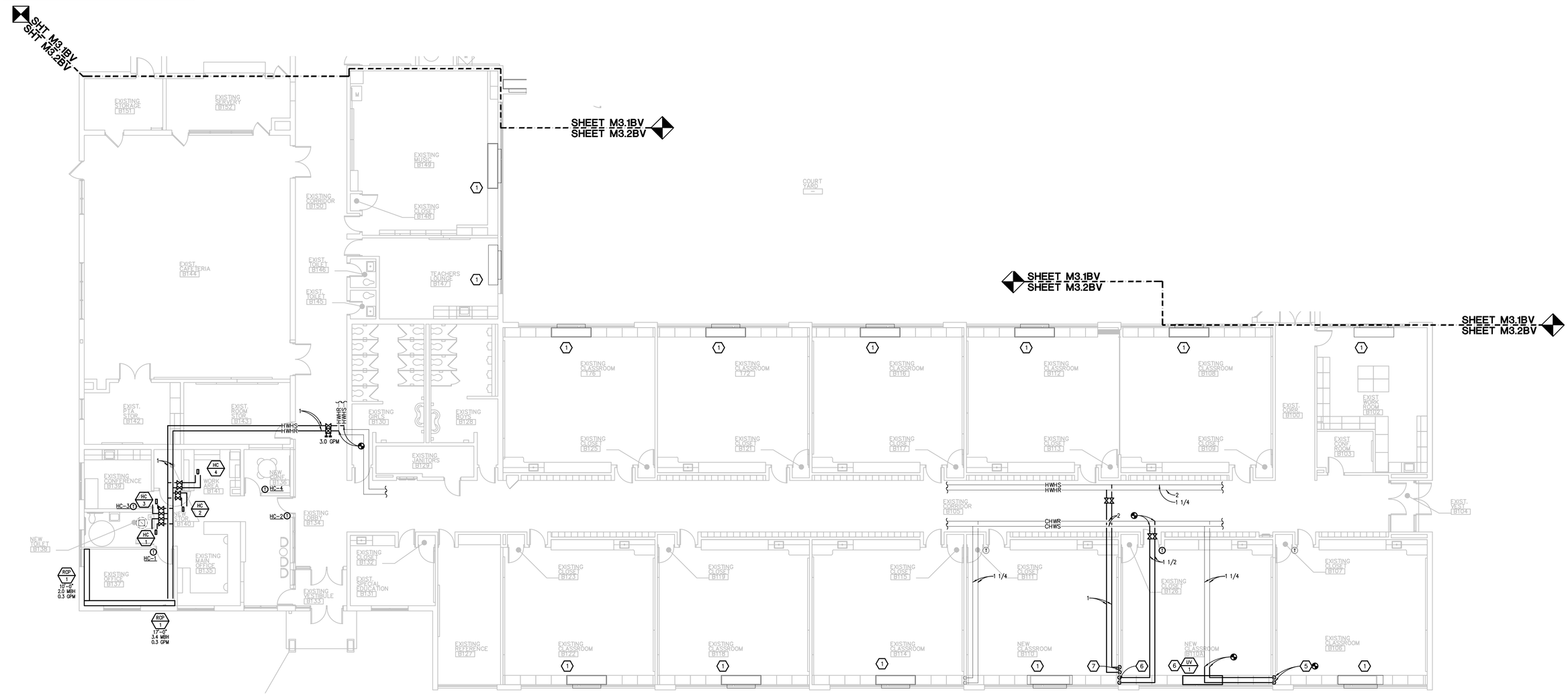

HVAC PIPING NEW WORK PLAN - AREA 'B'

SCALE: 1/8" = 1' - 0"

HVAC PIPING GENERAL NOTES:

1. THESE DRAWINGS ARE DIAGRAMMATIC, AND REPRESENT THE GENERAL INTENT AND ARRANGEMENT OF SYSTEMS. THEY ARE NOT TO BE CONSIDERED FABRICATION/COORDINATION/SHOP DRAWINGS. COORDINATION WITH OTHER TRADES IS REQUIRED. PROVIDE THE ADDITIONAL FITTINGS AND OFFSETS THAT WILL BE REQUIRED TO COMPLETE EACH SYSTEM AND TO AVOID INTERFERENCES WITH ALL OTHER SYSTEMS INCLUDING THE STRUCTURE, SHEET METAL, OTHER PIPING SYSTEMS, ELECTRICAL CONDUITS, BUS DUCTS, CABLE TRAY, LIGHT FIXTURES, ETC. AND/OR OTHER SPACE CONSTRAINTS.
2. INSTALL SYSTEMS SUCH THAT REQUIRED CLEARANCE AND SERVICE ACCESS SPACE IS PROVIDED AROUND ALL MECHANICAL AND ELECTRICAL EQUIPMENT, AND AROUND ANY COMPONENTS WHICH REQUIRE SERVICE ACCESS.
3. PIPING AND DUCTWORK SHALL NOT BE INSTALLED ABOVE ELECTRICAL TRANSFORMERS, SWITCHBOARDS, PANELBOARDS OR MOTOR CONTROL CENTERS.
4. COORDINATE AND PROVIDE ACCESS DOORS WITHIN INACCESSIBLE CEILING, SHAFT, AND CHASE AREAS FOR ALL COMPONENTS WHICH REQUIRE SERVICE ACCESS. REFER TO ARCHITECTURAL DRAWINGS FOR CEILING TYPES.
5. PROVIDE SUPPLEMENTARY STEEL AS REQUIRED FOR THE PROPER SUPPORT OF ALL SYSTEMS.
6. SUBMIT PROPOSED METHODS OF ANCHORING AND GUIDING PIPING SYSTEMS TO STRUCTURAL ENGINEER FOR APPROVAL.
7. COORDINATE LOCATION OF DUCT-MOUNTED HYDRONIC DEVICES WITH SHEET METAL TRADES.
8. BRANCH PIPING SERVING TERMINAL UNIT HEATING COILS OR RADIANT CEILING PANELS SHALL BE 3/4" UNLESS OTHERWISE NOTED. BRANCH PIPING SERVING MORE THAN ONE TERMINAL UNIT HEATING COIL SHALL BE 1" UNLESS OTHERWISE NOTED. BRANCH PIPING SERVING HOT WATER UNIT HEATERS AND CABINET UNIT HEATERS SHALL BE 1" UNLESS OTHERWISE NOTED.
9. MOUNT THERMOSTATS 48" A.F.F., UNLESS OTHERWISE NOTED. LOCATE AS CLOSE AS POSSIBLE TO DOOR WHEN INDICATED NEAR DOOR. COORDINATE EXACT LOCATION WITH ALL OTHER TRADES.

CONSTRUCTION KEY NOTES:

1. PROVIDE NEW HOT WATER HEATING AND CHILLED WATER CONTROL VALVES AND ACTUATORS IN EXISTING UNIT VENTILATOR HOUSING. BRUSH/VACUUM HEATING AND CHILLED WATER COILS, STRAIGHTEN FINS, AND VACUUM CLEAN UNIT VENTILATOR HOUSING. SNAKE EXISTING CONDENSATE PIPE AND PROVIDE NEW COPPER ELBOW ON EXTERIOR TERMINATION.
2. INSTALL NEW AIR COOLED CHILLER WITH REMOTE INDOOR EVAPORATOR BUNDLE ON EXISTING CONCRETE PAD.
3. REMOVE AND REPLACE EXISTING BUILDING CONTROLLER WITH NEW JCI FACILITY EXPLORER.
4. EVAPORATIVE BUNDLE TO BE SUSPENDED FROM STRUCTURE. PROVIDE NECESSARY SUPPORTS AND STEEL. RECONNECT EXISTING CHILLED WATER PIPING.
5. CONNECT NEW 1 1/4 CHWS/R PIPING TO EXISTING PIPING BEHIND CASEWORK.
6. ROUTE NEW CHWS/R PIPING DOWN WALL AND BEHIND CASEWORK TO NEW UNIT.
7. ROUTE NEW HWHS/R PIPING DOWN WALL AND BEHIND CASEWORK TO NEW UNIT.
8. ROUTE NEW REFRIGERANT PIPING THROUGH EXISTING OPENINGS.
9. CONNECT NEW CONDENSATE PIPING TO EXISTING CONDENSATE PIPE.
10. INSTALL NEW CONDENSING UNIT ON EXISTING ROOF CURB.

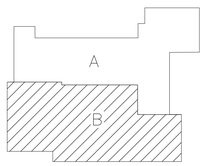

KEY PLAN

WAKELY ASSOCIATES, INC.
ARCHITECTS & ENGINEERS

30500 VAN DYKE AVE.
SUITE M-7
WARREN, MICHIGAN, 48093

TEL. 586-573-4100
FAX. 586-573-0822
E-MAIL: WA@WAKELYAIA.COM

Peter Basso Associates Inc
CONSULTING ENGINEERS
5145 Livernois, Suite 100
Troy, Michigan 48098-3276
Tel: 248-879-5668
Fax: 248-879-0007
www.PeterBassoAssociates.com
PBA Project No.: 2015-0144

FARMINGTON PUBLIC SCHOOLS - 2015 BOND
2018 PROJECTS
KENBROOK & BEECHVIEW ELEMENTARY SCHOOLS

BEECHVIEW ELEMENTARY SCHOOL

HVAC PIPING NEW WORK PLAN - AREA 'B'

PRELIMINARY ☐
DESIGN DEVELOPMENT ☐
CONSTRUCTION ■
FINAL RECORD ☐

DRAWN BY: JRM
CHECKED BY: SVM

REVISIONS:

DATE: 12-15-17

SHEET NO.:

M3.2BV

JOB NO.: 171712A

g:\2015\2015-0144-00\Cad\beechview es\2015-0144-BV-M3-HP1.dwg, M3.2BV, 12/12/2017 2:33:03 PM, Suha A. Matti, _Default.pc3 ,0.09094, Peter Basso Associates Inc.

THE FOLLOWING DIMENSION EQUALS ONE INCH WHEN PRINTED TO SCALE. 1"

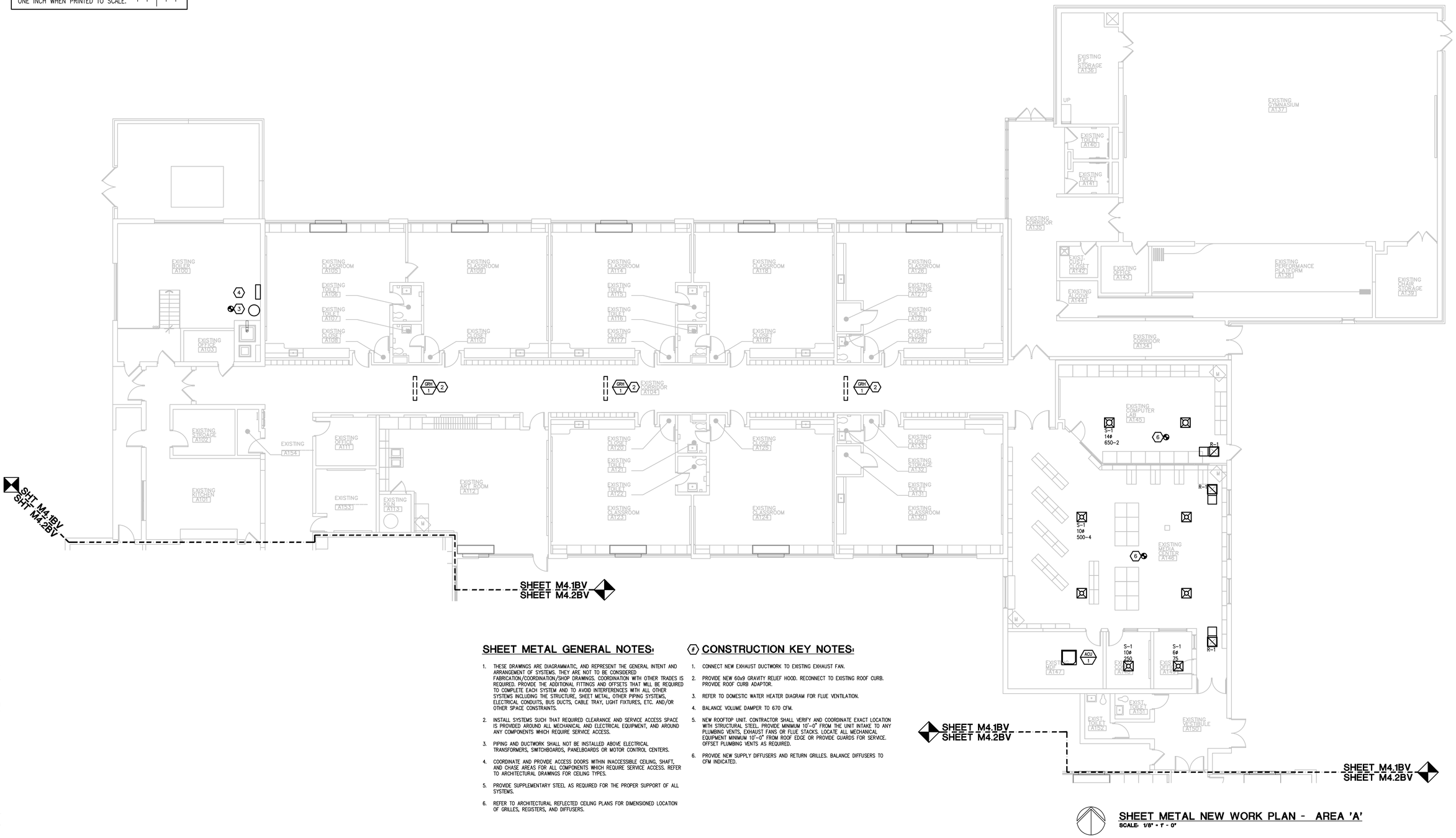

SHEET METAL GENERAL NOTES:

1. THESE DRAWINGS ARE DIAGRAMMATIC, AND REPRESENT THE GENERAL INTENT AND ARRANGEMENT OF SYSTEMS. THEY ARE NOT TO BE CONSIDERED FABRICATION/COORDINATION/SHOP DRAWINGS. COORDINATION WITH OTHER TRADES IS REQUIRED. PROVIDE THE ADDITIONAL FITTINGS AND OFFSETS THAT WILL BE REQUIRED TO COMPLETE EACH SYSTEM AND TO AVOID INTERFERENCES WITH ALL OTHER SYSTEMS INCLUDING THE STRUCTURE, SHEET METAL, OTHER PIPING SYSTEMS, ELECTRICAL CONDUITS, BUS DUCTS, CABLE TRAY, LIGHT FIXTURES, ETC. AND/OR OTHER SPACE CONSTRAINTS.
2. INSTALL SYSTEMS SUCH THAT REQUIRED CLEARANCE AND SERVICE ACCESS SPACE IS PROVIDED AROUND ALL MECHANICAL AND ELECTRICAL EQUIPMENT, AND AROUND ANY COMPONENTS WHICH REQUIRE SERVICE ACCESS.
3. PIPING AND DUCTWORK SHALL NOT BE INSTALLED ABOVE ELECTRICAL TRANSFORMERS, SWITCHBOARDS, PANELBOARDS OR MOTOR CONTROL CENTERS.
4. COORDINATE AND PROVIDE ACCESS DOORS WITHIN INACCESSIBLE CEILING, SHAFT, AND CHASE AREAS FOR ALL COMPONENTS WHICH REQUIRE SERVICE ACCESS. REFER TO ARCHITECTURAL DRAWINGS FOR CEILING TYPES.
5. PROVIDE SUPPLEMENTARY STEEL AS REQUIRED FOR THE PROPER SUPPORT OF ALL SYSTEMS.
6. REFER TO ARCHITECTURAL REFLECTED CEILING PLANS FOR DIMENSIONED LOCATION OF GRILLES, REGISTERS, AND DIFFUSERS.

CONSTRUCTION KEY NOTES:

1. CONNECT NEW EXHAUST DUCTWORK TO EXISTING EXHAUST FAN.
2. PROVIDE NEW 60x9 GRAVITY RELIEF HOOD. RECONNECT TO EXISTING ROOF CURB. PROVIDE ROOF CURB ADAPTOR.
3. REFER TO DOMESTIC WATER HEATER DIAGRAM FOR FLUE VENTILATION.
4. BALANCE VOLUME DAMPER TO 670 CFM.
5. NEW ROOFTOP UNIT. CONTRACTOR SHALL VERIFY AND COORDINATE EXACT LOCATION WITH STRUCTURAL STEEL. PROVIDE MINIMUM 10'-0" FROM THE UNIT INTAKE TO ANY PLUMBING VENTS, EXHAUST FANS OR FLUE STACKS. LOCATE ALL MECHANICAL EQUIPMENT MINIMUM 10'-0" FROM ROOF EDGE OR PROVIDE GUARDS FOR SERVICE. OFFSET PLUMBING VENTS AS REQUIRED.
6. PROVIDE NEW SUPPLY DIFFUSERS AND RETURN GRILLES. BALANCE DIFFUSERS TO CFM INDICATED.

SHEET METAL NEW WORK PLAN - AREA 'A'

SCALE: 1/8" = 1' - 0"

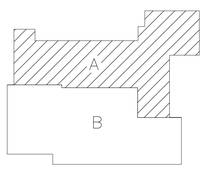

KEY PLAN

WAKELY ASSOCIATES, INC.
ARCHITECTS & ENGINEERS

30500 VAN DYKE AVE.
SUITE M-7
WARREN, MICHIGAN, 48093

TEL. 586-573-4100
FAX. 586-573-0822
E-MAIL: WA@WAKELYAIA.COM

Peter Basso Associates Inc
CONSULTING ENGINEERS
5145 Livernois, Suite 100
Troy, Michigan 48098-3276
Tel: 248-879-5668
Fax: 248-879-0007
www.PeterBassoAssociates.com
PBA Project No.: 2015-0144

FARMINGTON PUBLIC SCHOOLS - 2015 BOND
2018 PROJECTS
KENBROOK & BEECHVIEW ELEMENTARY SCHOOLS

BEECHVIEW ELEMENTARY SCHOOL

SHEET METAL NEW WORK PLAN - AREA 'A'

PRELIMINARY ☐
DESIGN DEVELOPMENT ☐
CONSTRUCTION ■
FINAL RECORD ☐

DRAWN BY: JRM
CHECKED BY: SVM

REVISIONS:

DATE: 12-15-17

SHEET NO.: M4.1BV

JOB NO.: 171712A

g:\2015\2015-0144-00\Cad\beechview es\2015-0144-BV-M4-SM1.dwg, M4.1BV, 12/12/2017 2:33:12 PM, Suha A. Matti, _Default.pc3 .0.09094, Peter Basso Associates Inc.

THE FOLLOWING DIMENSION EQUALS ONE INCH WHEN PRINTED TO SCALE.

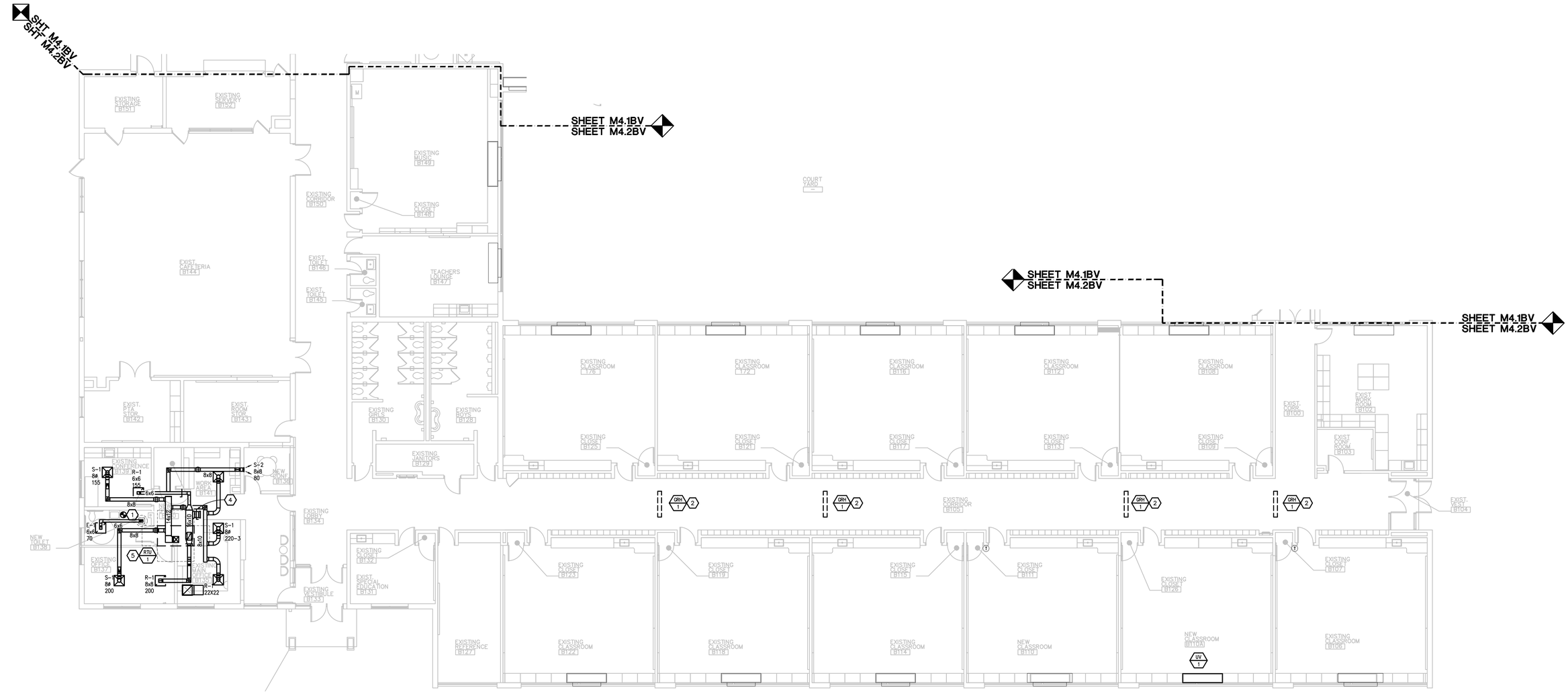

SHEET METAL NEW WORK PLAN - AREA 'B'

SCALE: 1/8" = 1' - 0"

SHEET METAL GENERAL NOTES:

1. THESE DRAWINGS ARE DIAGRAMMATIC, AND REPRESENT THE GENERAL INTENT AND ARRANGEMENT OF SYSTEMS. THEY ARE NOT TO BE CONSIDERED FABRICATION/COORDINATION/SHOP DRAWINGS. COORDINATION WITH OTHER TRADES IS REQUIRED. PROVIDE THE ADDITIONAL FITTINGS AND OFFSETS THAT WILL BE REQUIRED TO COMPLETE EACH SYSTEM AND TO AVOID INTERFERENCES WITH ALL OTHER SYSTEMS INCLUDING THE STRUCTURE, SHEET METAL, OTHER PIPING SYSTEMS, ELECTRICAL CONDUITS, BUS DUCTS, CABLE TRAY, LIGHT FIXTURES, ETC. AND/OR OTHER SPACE CONSTRAINTS.
2. INSTALL SYSTEMS SUCH THAT REQUIRED CLEARANCE AND SERVICE ACCESS SPACE IS PROVIDED AROUND ALL MECHANICAL AND ELECTRICAL EQUIPMENT, AND AROUND ANY COMPONENTS WHICH REQUIRE SERVICE ACCESS.
3. PIPING AND DUCTWORK SHALL NOT BE INSTALLED ABOVE ELECTRICAL TRANSFORMERS, SWITCHBOARDS, PANELBOARDS OR MOTOR CONTROL CENTERS.
4. COORDINATE AND PROVIDE ACCESS DOORS WITHIN INACCESSIBLE CEILING, SHAFT, AND CHASE AREAS FOR ALL COMPONENTS WHICH REQUIRE SERVICE ACCESS. REFER TO ARCHITECTURAL DRAWINGS FOR CEILING TYPES.
5. PROVIDE SUPPLEMENTARY STEEL AS REQUIRED FOR THE PROPER SUPPORT OF ALL SYSTEMS.
6. REFER TO ARCHITECTURAL REFLECTED CEILING PLANS FOR DIMENSIONED LOCATION OF GRILLES, REGISTERS, AND DIFFUSERS.

CONSTRUCTION KEY NOTES:

1. CONNECT NEW EXHAUST DUCTWORK TO EXISTING EXHAUST FAN.
2. PROVIDE NEW 60x9 GRAVITY RELIEF HOOD. RECONNECT TO EXISTING ROOF CURB. PROVIDE ROOF CURB ADAPTOR.
3. REFER TO DOMESTIC WATER HEATER DIAGRAM FOR FLUE VENTILATION.
4. BALANCE VOLUME DAMPER TO 670 CFM.
5. NEW ROOFTOP UNIT. CONTRACTOR SHALL VERIFY AND COORDINATE EXACT LOCATION WITH STRUCTURAL STEEL. PROVIDE MINIMUM 10'-0" FROM THE UNIT INTAKE TO ANY PLUMBING VENTS, EXHAUST FANS OR FLUE STACKS. LOCATE ALL MECHANICAL EQUIPMENT MINIMUM 10'-0" FROM ROOF EDGE OR PROVIDE GUARDS FOR SERVICE. OFFSET PLUMBING VENTS AS REQUIRED.
6. PROVIDE NEW SUPPLY DIFFUSERS AND RETURN GRILLES. BALANCE DIFFUSERS TO CFM INDICATED.

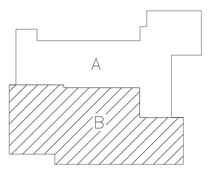

KEY PLAN

WAKELY ASSOCIATES, INC.
ARCHITECTS & ENGINEERS

30500 VAN DYKE AVE.
SUITE M-7
WARREN, MICHIGAN, 48093

TEL. 586-573-4100
FAX. 586-573-0822
E-MAIL: WA@WAKELYAIA.COM

Peter Basso Associates Inc
CONSULTING ENGINEERS
5145 Livernois, Suite 100
Troy, Michigan 48098-3276
Tel: 248-879-5668
Fax: 248-879-0007
www.PeterBassoAssoc-ates.com
PBA Project No.: 2015-0144

FARMINGTON PUBLIC SCHOOLS - 2015 BOND
2018 PROJECTS
KENBROOK & BEECHVIEW ELEMENTARY SCHOOLS

BEECHVIEW ELEMENTARY SCHOOL

SHEET METAL NEW WORK PLAN - AREA 'B'

PRELIMINARY ☐
DESIGN DEVELOPMENT ☐
CONSTRUCTION ■
FINAL RECORD ☐

DRAWN BY: JRM
CHECKED BY: SVM

REVISIONS:

DATE: 12-15-17

SHEET NO.: M4.2BV

JOB NO.: 171712A

g:\2015\2015-0144-00\Cad\beechview es\2015-0144-BV-M4-SM1.dwg, M4.2BV, 12/12/2017 2:33:13 PM, Suha A. Matti, _Default.pc3 ,0.09094, Peter Basso Associates Inc.

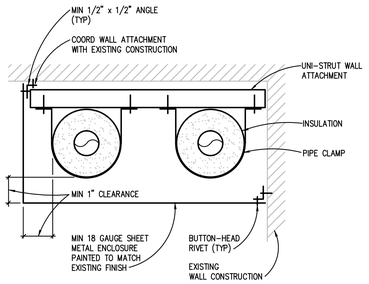

PIPE ENCLOSURE DETAIL
NO SCALE

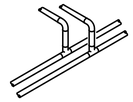

BRANCH CONNECTION OFF TOP

APPLIES TO THE FOLLOWING SYSTEMS:
DOMESTIC WATER
STEAM & CONDENSATE
LABORATORY GASES
LABORATORY VACUUM
COMPRESSED AIR
NATURAL GAS

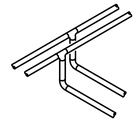

BRANCH CONNECTION OFF BOTTOM

APPLIES TO THE FOLLOWING SYSTEMS:
HOT WATER HEATING
CHILLED WATER
CONDENSER WATER
ENERGY RECOVERY
PROCESS COOLING WATER

NOTE: BOTTOM AS INDICATED OR SIDE CONNECTION IS ACCEPTABLE. CONNECTION ABOVE CENTERLINE OF MAINS IS NOT ACCEPTABLE.

TYPICAL BRANCH TAKE-OFF CONNECTION PIPING DETAIL
NO SCALE

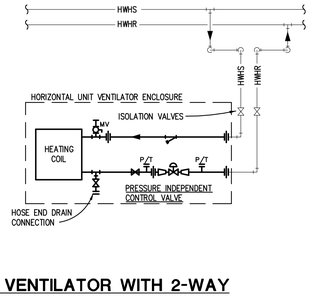

UNIT VENTILATOR WITH 2-WAY HOT WATER CONTROL VALVE PIPING DIAGRAM
NO SCALE

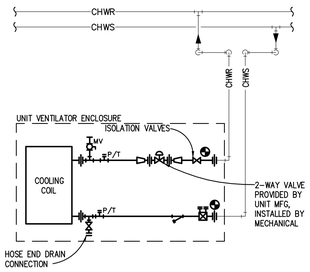

UNIT VENTILATOR WITH 2-WAY CHILLED WATER CONTROL VALVE PIPING DIAGRAM
NO SCALE

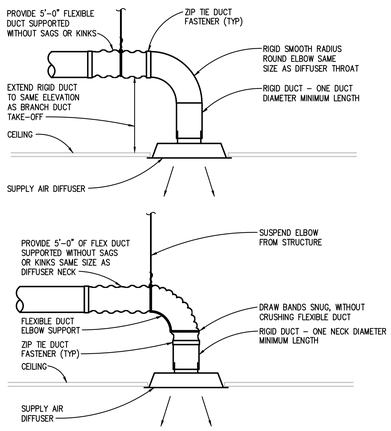

ROUND NECK SUPPLY AIR DIFFUSER DETAIL
NO SCALE

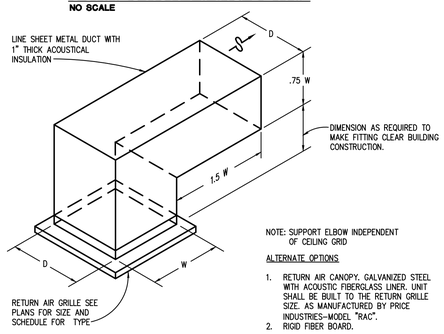

NOTE: SUPPORT ELBOW INDEPENDENT OF CEILING GRID

ALTERNATE OPTIONS

1. RETURN AIR CANOPY. GALVANIZED STEEL WITH ACOUSTIC FIBERGLASS LINER. UNIT SHALL BE BUILT TO THE RETURN GRILLE SIZE. AS MANUFACTURED BY PRICE INDUSTRIES–MODEL "RAC".
2. RIGID FIBER BOARD.

PLENUM RETURN AIR GRILLE DETAIL
NO SCALE

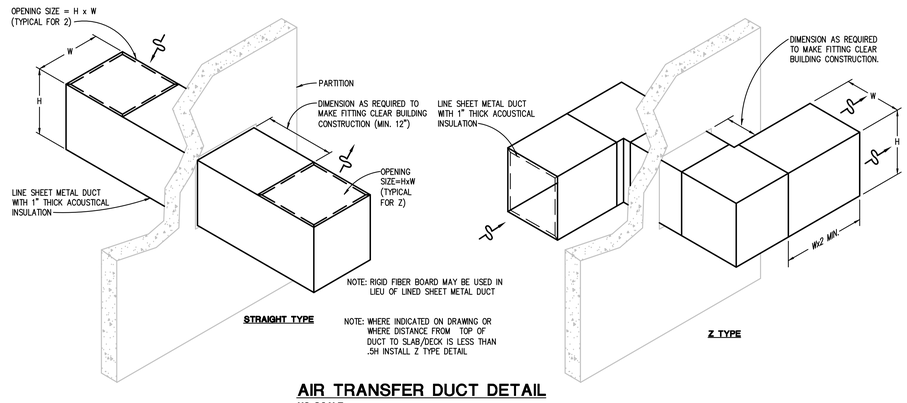

AIR TRANSFER DUCT DETAIL
NO SCALE

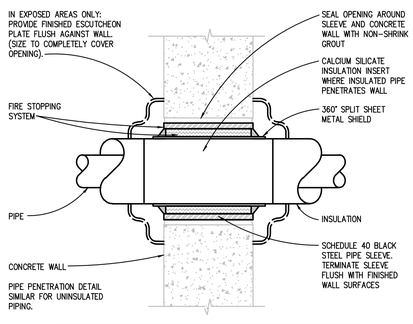

DETAIL INDICATES THE INSTALLATION REQUIREMENTS FOR A FIRE RATED ASSEMBLY. FOR A NON-FIRE RATED ASSEMBLY PACK SLEEVED OPENING WITH INSULATION MATERIAL AND CAULK WITH NON-HARDENING SEALANT.

FIRE RATED AND NON-FIRE RATED POURED CONCRETE OR BLOCK WALL PIPE PENETRATION DETAIL
NO SCALE

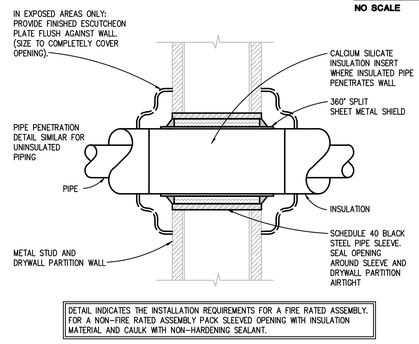

DETAIL INDICATES THE INSTALLATION REQUIREMENTS FOR A FIRE RATED ASSEMBLY. FOR A NON-FIRE RATED ASSEMBLY PACK SLEEVED OPENING WITH INSULATION MATERIAL AND CAULK WITH NON-HARDENING SEALANT.

FIRE RATED AND NON-FIRE RATED METAL STUD AND DRYWALL PARTITION WALL PIPE PENETRATION DETAIL
NO SCALE

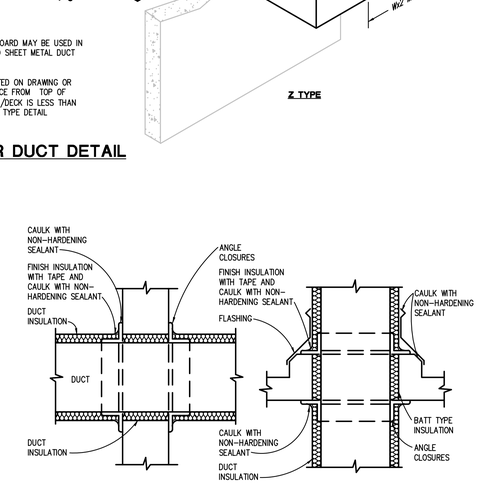

VERTICAL OR HORIZONTAL (NON FIRE RATED ASSEMBLY) DUCT PENETRATION DETAIL
NO SCALE

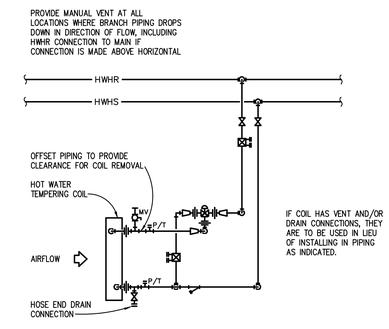

HOT WATER TEMPERING COIL WITH THREE-WAY CONTROL VALVE PIPING DIAGRAM
NO SCALE

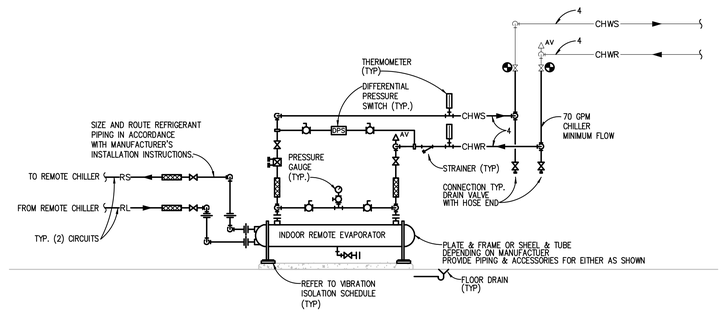

REMOTE DX EVAPORATOR PIPING DIAGRAM
NO SCALE

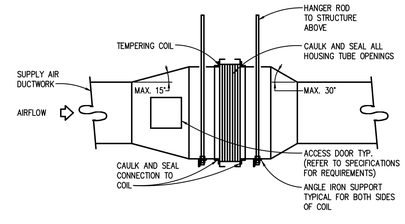

DUCT MOUNTED TEMPERING COIL INSTALLATION DETAIL
NO SCALE

WA

WAKELY ASSOCIATES, INC.
ARCHITECTS & ENGINEERS

30500 VAN DYKE AVE.
SUITE M-7
WARREN, MICHIGAN, 48093

TEL. 586-573-4100
FAX. 586-573-0822
E-MAIL: WA@WAKELYAIA.COM

Peter Basso Associates Inc
CONSULTING ENGINEERS
5145 Livernois, Suite 100
Troy, Michigan 48098-3276
Tel: 248-879-5668
Fax: 248-879-0007
www.PeterBassoAssociates.com
PBA Project No. 2015-0144

FARMINGTON PUBLIC SCHOOLS - 2015 BOND
2018 PROJECTS
KENBROOK & BEECHVIEW ELEMENTARY SCHOOLS

BEECHVIEW ELEMENTARY SCHOOL

MECHANICAL DETAILS

PRELIMINARY ☐
DESIGN DEVELOPMENT ☐
CONSTRUCTION ■
FINAL RECORD ☐

DRAWN BY: JRM
CHECKED BY: SVM

REVISIONS:

DATE: 12-15-17

SHEET NO.:

M6.1BV

JOB NO.: 171712A

g:\2015\2015-0144-00\Cad\beechview es\2015-0144-BV-M6-DT.dwg, M6.1BV, 12/12/2017 2:33:21 PM, Suha A. Matti, _Default.pc3 0.09094, Peter Basso Associates Inc.

TRAP DIMENSION TABLE

TYPE OF SYSTEM	S.P. AT COIL DRAIN PAN (IN.) (NOTE A)	DIMENSION "A" (INCHES) MIN.	DIMENSION "B" (INCHES)	DIMENSION "C" (INCHES) (TRAP SEAL)	DIMENSION "D" (INCHES)	DIMENSION "E" (INCHES)	DIMENSION "F" (INCHES) DRAIN PIPE SIZE (INCHES)			
							1 1/2	2	2 1/2, 3	4
DRAW THROUGH	−5.1 TO −6	5.0	5.0	2	6	2	13.0	14.0	15.0	16.0
	−4.1 TO −5	4.5	4.5	2	5	2	12.0	13.0	14.0	15.0
	−3.1 TO −4	4.0	4.0	2	4	2	11.0	12.0	13.0	14.0
	−2.1 TO −3	3.5	3.5	2	3	2	10.0	11.0	12.0	13.0
	UP TO −2	3.0	3.0	2	2	2	9.0	10.0	11.0	12.0
BLOW THROUGH	UP TO +2	4.0	2.0	2	2	4	9.0	10.0	11.0	12.0
	+2.1 TO +3	5.0	2.0	2	3	5	10.0	11.0	12.0	13.0
	+3.1 TO +4	6.0	2.0	2	4	6	11.0	12.0	13.0	14.0
	+4.1 TO +5	7.0	2.0	2	5	7	12.0	13.0	14.0	15.0
	+5.1 TO +6	8.0	2.0	2	6	8	13.0	14.0	15.0	16.0

NOTES: A. REFER TO ROOFTOP AIR HANDLING UNIT (COMMERCIAL, UNITARY, MODULAR) SCHEDULE FOR (−) OR (+) STATIC PRESSURE AT COIL DRAIN PAN.
B. ENERGY RECOVERY UNIT HEAT EXCHANGER CONDENSATE PAN TRAP PIPING OUTSIDE CASING SHALL BE INSULATED AND HEAT TRACED.
C. DIMENSION "G" IS MIN: 3" FOR UP TO 1 1/2" DRAIN PIPE
4" FOR 2" DRAIN PIPE
5" FOR 2 1/2" OR 3" DRAIN PIPE
6" FOR 4" DRAIN PIPE
D. PROVIDE ROOF CURB WITH ADEQUATE HEIGHT TO MEET DIMENSION "F"

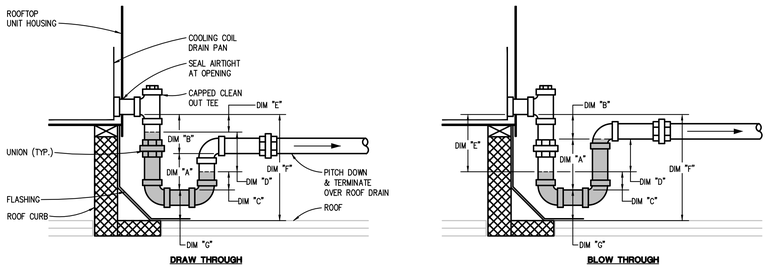

ROOFTOP AIR HANDLING UNIT CONDENSATE DRAIN PAN TRAP DETAIL
NO SCALE

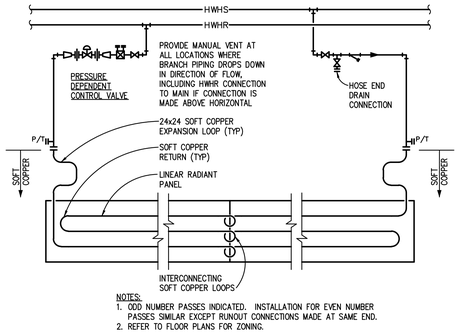

NOTES:
1. ODD NUMBER PASSES INDICATED. INSTALLATION FOR EVEN NUMBER PASSES SIMILAR EXCEPT RUNOUT CONNECTIONS MADE AT SAME END.
2. REFER TO FLOOR PLANS FOR ZONING.

END FEED LINEAR RADIANT CEILING PANEL PIPING DIAGRAM
NO SCALE

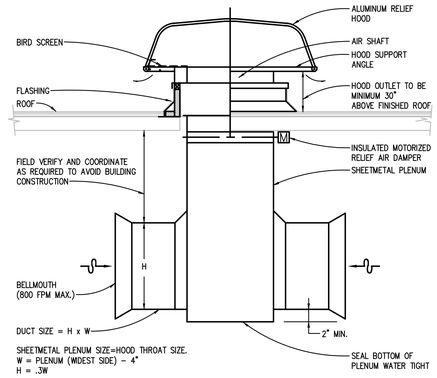

RELIEF AIR DUCTWORK DETAIL
NO SCALE

NOTES:
1. FOR 4" AND LARGER WATER SERVICES SHALL BE ROLLED OFF AT A 45° ANGLE FROM CENTERLINE OF WATER METER.
2. ALL PIPING SHALL BE SUPPORTED INDEPENDENTLY FROM WATER METER.

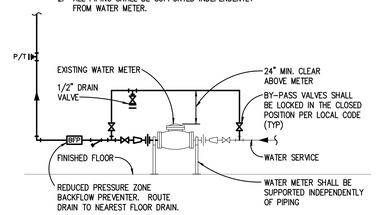

DOMESTIC WATER METER PIPING DIAGRAM
NO SCALE

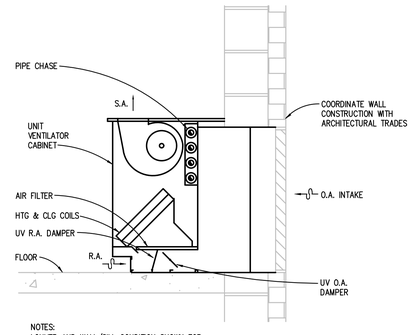

NOTES:
LOUVER AND WALL/SILL CONDITION SHOWN FOR REFERENCE ONLY. CONTRACTOR SHALL COORDINATE INSTALLATION WITH ACTUAL FIELD CONDITIONS AND MANUFACTURER RECOMMENDATIONS.

UNIT VENTILATOR INSTALLATION DETAIL
NO SCALE

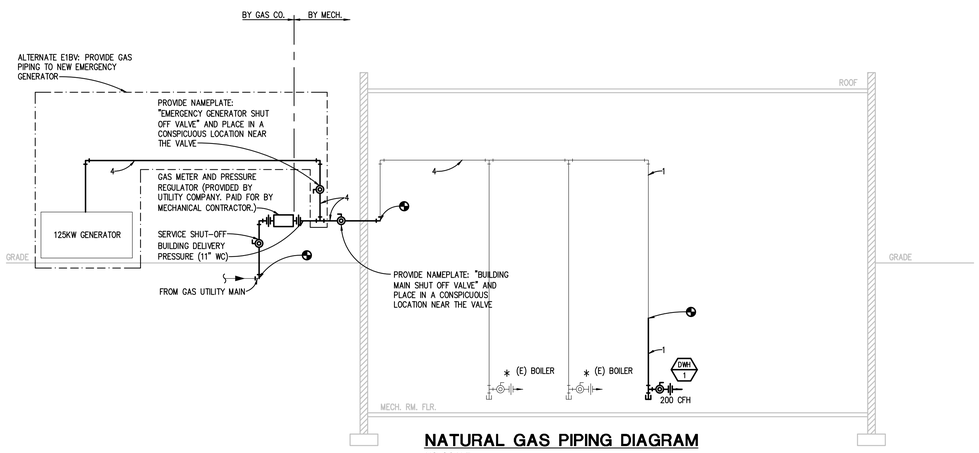

NATURAL GAS PIPING DIAGRAM
NO SCALE

GAS LOAD SCHEDULE

ITEM	TOTAL CFH
(E) BOILER	1,500
(E) BOILER	1,500
DOMESTIC WATER HEATER	200
EMERGENCY GENERATOR	2,500
CONNECTED GAS LOAD =	5,700

*GAS TRAIN PROVIDED BY EQUIPMENT MANUFACTURER − SEE SPECIFICATIONS

**GAS PRESSURE REGULATOR PROVIDED BY FOOD SERVICE MANUFACTURER

***THE GAS SERVICE COMPONENTS SHALL BE RATED IN ACCORDANCE WITH THE FOLLOWING CHART

METER OUTLET PRESSURE (psig)	MINIMUM SYSTEM PRESSURE RATING (psig)
0.4	0.5
1 OR 2	10
3 OR 30	DELIVERY +10
31 TO 100	DELIVERY +20
101 TO 200	DELIVERY +30

HOT WATER TEMPERATURE SET-UP
1. CREATE DEMAND GREATER THAN VALVE'S MINIMUM FLOW RATING USING HOSE CONNECTION ON HW LINE WITHIN ASSEMBLY. IF FLOW CAN NOT BE ACHIEVED THIS WAY, TURN ON FIXTURES WITHIN THE BUILDING.
2. ADJUST TEMPERATURE TO 130°F AND LET STABILIZE. RE-ADJUST AS NECESSARY.
3. SET HIGH LIMIT ON AQUASTAT TO 132°F.

HOT WATER RETURN SET-UP (TO BE DONE AFTER HOT WATER TEMPERATURE SET-UP)
1. ENSURE THERE IS NO FLOW IN THE SYSTEM.
2. SET LOW LIMIT ON AQUASTAT TO 127°F.
3. START RETURN PUMP.
4. OPEN BALANCE VALVE ON RETURN LINE GOING BACK TO WATER HEATER TO 10% OF RETURN FLOW.
5. LET PUMP RUN FOR MINIMUM 30 MINUTES. IF TEMPERATURE INCREASES ON OUTLET OF MIXING VALVE CLOSE THE BALANCE VALVE UNTIL TEMPERATURE IS MAINTAINED. IF TEMPERATURE DECREASES, OPEN THE BALANCE VALVE UNTIL TEMPERATURE IS MAINTAINED.
6. ALLOW PUMP TO CYCLE TO ENSURE IT STARTS AND STOPS AT AQUASTAT SETTINGS.

140°F HOT WATER RETURN SET-UP (TO BE DONE AFTER HOT WATER TEMPERATURE SET-UP)
1. ENSURE THERE IS NO FLOW IN THE SYSTEM.
2. SET HIGH LIMIT ON AQUASTAT TO 142°F
3. SET LOW LIMIT ON AQUASTAT TO 137°F.
4. START RETURN PUMP.
5. ALLOW PUMP TO CYCLE TO ENSURE IT STARTS AND STOPS AT AQUASTAT SETTINGS.

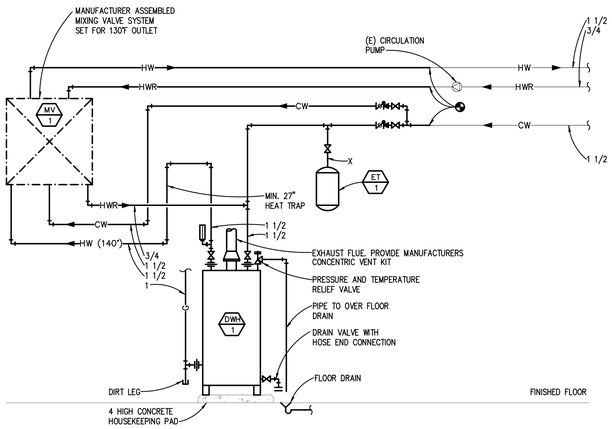

GAS FIRED ATMOSPHERIC VENT WATER HEATER WITH MIXING VALVE PIPING DIAGRAM
NO SCALE

WAKELY ASSOCIATES, INC.
ARCHITECTS & ENGINEERS
30500 VAN DYKE AVE.
SUITE M-7
WARREN, MICHIGAN, 48093
TEL. 586-573-4100
FAX. 586-573-0822
E-MAIL: WA@WAKELYAIA.COM

Peter Basso Associates Inc
CONSULTING ENGINEERS
5145 Livernois, Suite 100
Troy, Michigan 48098-3276
Tel: 248-879-5668
Fax: 248-879-0007
www.PeterBassoAssociates.com
PBA Project No. 2015-0144

FARMINGTON PUBLIC SCHOOLS - 2015 BOND
2018 PROJECTS
KENBROOK & BEECHVIEW ELEMENTARY SCHOOLS

BEECHVIEW ELEMENTARY SCHOOL

MECHANICAL DETAILS

PRELIMINARY ☐
DESIGN DEVELOPMENT ☐
CONSTRUCTION ■
FINAL RECORD ☐

DRAWN BY: JRM
CHECKED BY: SVM

REVISIONS:

DATE: 12-15-17

SHEET NO.:

M6.2BV

JOB NO.: 171712A

g:\2015\2015-0144-00\Cad\beechview es\2015-0144-BV-M6-DT.dwg, M6.2BV, 12/12/2017 2:33:22 PM, Suha A. Matti, _Default.pc3 ,0.09094, Peter Basso Associates Inc.

PLUMBING PIPING & VALVE APPLICATION SCHEDULE

	MATERIAL										PRESSURE CONNECTIONS										GRAVITY DWV CONNECTIONS					ISOLATION VALVES					
PIPE SIZE (INCHES)	SOFT COPPER TYPE K	HARD COPPER TYPE L	HARD COPPER TYPE M	CARBON STEEL (SCHED. 40)	CARBON STEEL (STD.)	GALV. STEEL (SCHED. 40)	PEX	PE PIPE	PE SHEATHED CARBON STEEL PIPE	CSST	NO-HUB CISP	PVC TYPE DWV	PP DRAINAGE PIPE	COPPER TYPE DWV	DUCTILE IRON PIPE	SOLDERED	BRAZED	WELDED	THREADED	FLANGED	GROOVED	INSERT & CRIMP	FUSION	PRESSURE-SEAL	MECHANICALLY-FORMED TEE	MECHANICAL JOINT	PUSH-ON-JOINT	SOLVENT WELDED	SOLDERED	FUSION	CISPI HORLESS	HEAVY-DUTY HORLESS	BALL	AGA BALL	GENERAL SERVICE BUTTERFLY	LUBRICATED PLUG	GATE	KEYED NOTES
ABOVEGROUND DOMESTIC WATER (POTABLE AND NON-POTABLE) ON DISTRIBUTION SIDE OF METER - MIN. WORKING PRESS. & TEMP.: 125 PSIG AT 200 DEG F																																							
UP TO 4		X														X	X			X	X			X	X								X		X			A
ABOVEGROUND SANITARY WASTE & VENT - MIN. WORKING PRESS.: 10-FOOT HEAD OF WATER																																							
1-1/2 TO 15											X																				X								
UNDERGROUND SANITARY WASTE & VENT - MIN. WORKING PRESS.: 10-FOOT HEAD OF WATER																																							
3 TO 12											X																					X							
3 TO 12												X																X											
ABOVEGROUND COLD CONDENSATE DRAIN - MIN. WORKING PRESSURE: 10 FT. HEAD OF WATER																																							
ALL SIZES			X											X		X	X																						
ABOVEGROUND PUMPED COLD CONDENSATE DRAIN - MIN. WORKING PRESSURE: 125 PSIG																																							
UP TO 2			X													X	X																X						
ABOVEGROUND FUEL GAS - MIN. WORKING PRESS.: 100 PSIG																																							
UP TO 2				X														X	X															X					E
2-1/2 TO 3				X														X		X														X					E
4 TO 10				X														X		X																	X		E
UNDERGROUND FUEL GAS - MIN. WORKING PRESS.: 100 PSIG																																							
1/2 TO 12								X															X																F

GENERAL NOTES

1. 'X' INDICATES ACCEPTABLE SELECTION. IF MORE THAN ONE SELECTION IS INDICATED FOR A PIPING SYSTEM, CONTRACTOR MAY SELECT FROM THOSE INDICATED SELECTIONS.
2. DISSIMILAR-METAL PIPING JOINTS: CONSTRUCT JOINTS USING DIELECTRIC FITTINGS COMPATIBLE WITH BOTH PIPING MATERIALS.
   a. NPS 2 AND SMALLER: USE DIELECTRIC NIPPLE/WATERWAY.
   b. NPS 2-1/2 AND LARGER: USE DIELECTRIC FLANGE KITS.
3. USE UNIONS OR FLANGES AT VALVE AND EQUIPMENT CONNECTIONS.
4. PLUMBING EQUIPMENT DRAINS, VENTS, SAFETY VALVE PIPING, BLOWDOWN PIPING AND THE LIKE SHALL BE SAME PIPING MATERIAL AS ASSOCIATED PIPING SYSTEM.
5. GROOVED END VALVES MAY BE USED WITH GROOVED PIPING.

KEYED NOTES

A. GROOVED AND PRESSURE SEALED FITTINGS, JOINTS, AND COUPLINGS, IF INDICATED AS AN ACCEPTABLE SELECTION, MAY BE USED IN ACCESSIBLE LOCATIONS ONLY FOR THIS PIPING SYSTEM.
B. JOINTS ARE NOT PERMITTED ON UNDERGROUND WATER PIPING.
C. USE CAST IRON DRAINAGE PATTERN (DURHAM) FITTINGS.
D. INSTALL IN CONTAINMENT JACKET, REFER TO SPECIFICATIONS.
E. USE STEEL WELDING FITTINGS AND WELDED JOINTS IN PLENUM CEILINGS. VALVES, FLANGES, OR UNIONS ARE PROHIBITED.
F. NO JOINTS ALLOWED UNDERGROUND.

DUCT SYSTEM APPLICATION SCHEDULE

	DUCT MATERIAL																	
AIR SYSTEMS	G90 GALV. SHEET METAL	DOUBLE-WALL LINED G90 GALV. SHEET METAL (SOLID INNER WALL)	DOUBLE-WALL LINED G90 GALV. SHEET METAL (PERF. INNER WALL)	G90 GALV. SHEET METAL WITH 1-INCH LINING	GALVANNEALED SHEET METAL	ALUMINUM	TYPE 304 STAINLESS STEEL	TYPE 316 STAINLESS STEEL	PVC COATED GALV. SHEET METAL (4X1)	PVC COATED GALV. SHEET METAL (1X4)	PVC COATED GALV. SHEET METAL (4X4)	16 GA. CARBON STEEL	ZERO-CLEARANCE PREFABRICATED RANGE HOOD EXHAUST DUCT	FABRIC	DESIGN PRESSURE CLASS (INCHES WG)	SEAL CLASS	MAX. ALLOWABLE LEAKAGE RATE (PERCENT)	KEYED NOTES
SUPPLY AIR WITHOUT TERMINAL UNITS	X														+2	A	5	
RETURN AIR WITHOUT TERMINAL UNITS	X														-2	A	5	
AIR TRANSFER DUCT				X											+2	A	5	
RELIEF AIR DOWNSTREAM OF FANS	X														+6	A	5	
OUTSIDE AIR AND MIXED AIR DUCT	X														-6	A	5	
OUTSIDE AIR, RELIEF AIR AND EXHAUST AIR PLENUMS ADJACENT TO EXTERIOR LOUVERS		X													+/-6	A	5	

GENERAL NOTES

1. 'X' INDICATES ACCEPTABLE SELECTION. IF MORE THAN ONE SELECTION IS INDICATED FOR A DUCT SYSTEM, CONTRACTOR MAY SELECT FROM THOSE INDICATED SELECTIONS.
2. 4 X 1 PVC-COATED GALVANIZED STEEL: FACTORY-APPLIED PVC COATINGS SHALL BE 4 MILS (0.10 MM) THICK ON EXTERIOR SHEET METAL SURFACES OF DUCTS AND FITTINGS EXPOSED TO CORROSIVE CONDITIONS AND MINIMUM 1 MIL (0.025 MM) THICK ON INTERIOR SURFACES.
3. 1 X 4 (4 X 1 REVERSE COATED) PVC-COATED GALVANIZED STEEL: FACTORY-APPLIED PVC COATINGS SHALL BE 4 MILS (0.10 MM) THICK ON INTERIOR SHEET METAL SURFACES OF DUCTS AND FITTINGS EXPOSED TO CORROSIVE CONDITIONS AND MINIMUM 1 MIL (0.025 MM) THICK ON EXTERIOR SURFACES.
4. 4 X 4 PVC-COATED GALVANIZED STEEL: FACTORY-APPLIED PVC COATINGS SHALL BE 4 MILS (0.10 MM) THICK ON SHEET METAL SURFACES OF DUCTS AND FITTINGS EXPOSED TO CORROSIVE CONDITIONS AND 4 MILS (0.10 MM) THICK ON OPPOSITE SURFACES.

KEYED NOTES

A. SCREWS, DAMPERS, OR PROJECTIONS OF ANY TYPE ON INTERIOR OF DUCT SURFACE ARE PROHIBITED.
B. DUCT SHALL BE LINED WITHIN 25 FEET UPSTREAM OF FANS.
C. ALL WELDED CONSTRUCTION.

ABOVEGROUND HVAC PIPING & VALVE APPLICATION SCHEDULE

	MATERIAL						CONNECTION							ISOLATION VALVES				
PIPE SIZE (INCHES)	SOFT COPPER TYPE K	HARD COPPER TYPE L	HARD COPPER TYPE M	CARBON STEEL (SCHED. 80)	CARBON STEEL (STD.)	COPPER TYPE DWV	SOLDERED	BRAZED	WELDED	THREADED	FLANGED	GROOVED	PRESSURE SEAL	MECHANICALLY FORMED TEE	BALL	GENERAL SERVICE BUTTERFLY	HI-PERF BUTTERFLY	GATE	KEYED NOTES
CHILLED WATER SUPPLY & RETURN - MIN. WORKING PRESS. & TEMP.: 125 PSIG AT 200 DEG F																			
UP TO 2		X					X	X					X	X	X				
2-1/2 TO 4				X					X		X	X				X			A
HEATING HOT WATER SUPPLY & RETURN - MIN. WORKING PRESS. & TEMP.: 125 PSIG AT 200 DEG F																			
UP TO 2		X					X	X					X	X	X				
2-1/2 TO 4				X					X		X	X				X			D

GENERAL NOTES

1. 'X' INDICATES ACCEPTABLE SELECTION. IF MORE THAN ONE SELECTION IS INDICATED FOR A PIPING SYSTEM, CONTRACTOR MAY SELECT FROM THOSE INDICATED SELECTIONS.
2. DISSIMILAR-METAL PIPING JOINTS: CONSTRUCT JOINTS USING DIELECTRIC FITTINGS COMPATIBLE WITH BOTH PIPING MATERIALS. IF A BRONZE VALVE CONNECTS THE DISSIMILAR METALS NO FURTHER DIELECTRIC ISOLATION IS REQUIRED.
   a. NPS 2 AND SMALLER: USE BRASS COUPLING, NIPPLE, OR UNION.
   b. NPS 2-1/2 AND LARGER: USE DIELECTRIC FLANGE KITS.
3. USE UNIONS OR FLANGES AT VALVE AND EQUIPMENT CONNECTIONS.
4. HVAC EQUIPMENT DRAINS, VENTS, SAFETY VALVE PIPING, BLOWDOWN PIPING AND THE LIKE SHALL BE SAME PIPING MATERIAL AS ASSOCIATED PIPING SYSTEM.
5. GROOVED END VALVES MAY BE USED WITH GROOVED PIPING.

KEYED NOTES

A. GROOVED FITTINGS, JOINTS, AND COUPLINGS, IF INDICATED AS AN ACCEPTABLE SELECTION, MAY BE USED IN ACCESSIBLE LOCATIONS FOR THIS PIPING SYSTEM ONLY.
B. BALL VALVE WITH 250 PSIG STEAM TRIM.
C. BALL VALVE WITH 150 PSIG STEAM TRIM.
D. GROOVED FITTINGS, JOINTS AND COUPLINGS MAY BE USED IN MECHANICAL ROOMS ONLY.

DUCT SYSTEM INSULATION APPLICATION SCHEDULE

	INSULATION MATERIAL & THICKNESS (INCHES)							FIELD APPLIED JACKET MATERIAL		
	FIBERGLASS BLANKET 0.75 LB/CU FT	FIBERGLASS BLANKET 1.0 LB/CU FT	FIBERGLASS BOARD 2.25 LB/CU FT	FIBERGLASS BOARD 6.0 LB/CU FT	FLEXIBLE ELASTOMERIC	ASTM E2336 2-HOUR FIRE RATED BLANKET	2-HOUR FIRE RATED BLANKET	ALUMINUM	SELF-ADHESIVE (FOR OUTDOOR APPLICATIONS)	KEYED NOTES
DUCT SYSTEMS LOCATED INDOORS										
SUPPLY AIR, EXCEPT AS NOTED BELOW		1.5								A
OUTSIDE AIR AND MIXED AIR, EXCEPT AS NOTED BELOW		1.5								
OUTSIDE AIR INTAKE, RELIEF AIR AND EXHAUST AIR PLENUMS ADJACENT TO EXTERIOR LOUVERS			1.5							
DUCT SYSTEMS LOCATED OUTDOORS										
RECTANGULAR DUCTS AND AIR PLENUMS, ALL TYPES				2					X	E

PLENUMS, DUCTS, AND DUCT ACCESSORIES NOT REQUIRING INSULATION:
- FIBROUS-GLASS DUCTS
- DOUBLE-WALL METAL DUCTS WITH INSULATION OF SUFFICIENT THICKNESS TO COMPLY WITH ENERGY CODE AND ASHRAE/IESNA 90.1 - 2007
- METAL DUCTS WITH DUCT LINER OF SUFFICIENT THICKNESS TO COMPLY WITH ENERGY CODE AND ASHRAE/IESNA 90.1 - 2007
- EXPOSED SUPPLY DUCT IN CONDITIONED SPACE SERVED BY THAT SYSTEM
- FABRIC SUPPLY DUCTS
- FACTORY-INSULATED FLEXIBLE DUCTS
- FACTORY-INSULATED PLENUMS AND CASINGS
- FLEXIBLE CONNECTORS
- VIBRATION-CONTROL DEVICES
- FACTORY-INSULATED ACCESS PANELS AND DOORS

GENERAL NOTES

1. 'X' OR THICKNESS IN INCHES INDICATE ACCEPTABLE SELECTION. IF MORE THAN ONE SELECTION IS INDICATED FOR A DUCT SYSTEM, CONTRACTOR MAY SELECT FROM THOSE INDICATED SELECTIONS.
2. REFER TO METAL DUCT SECTION OF SPECIFICATIONS FOR DUCT LINING AND DOUBLE-WALL INSULATED DUCT.
3. REFER TO HVAC CASINGS SECTION OF SPECIFICATIONS FOR DOUBLE-WALL INSULATED PLENUMS.

KEYED NOTES

A. INCLUDE INSULATION AROUND DUCT MOUNTED COILS AND AIR TERMINAL UNIT COILS.
B. NUMBER OF LAYERS AND TOTAL INSULATION THICKNESS AS RECOMMENDED BY SELECTED MANUFACTURER.
C. DOES NOT APPLY TO PREFABRICATED, ZERO-CLEARANCE GREASE DUCT.
D. PROVIDE MANUFACTURER'S RECOMMENDED PROTECTIVE COATING FOR FLEXIBLE ELASTOMERIC THERMAL DUCT INSULATION.
E. INSULATE DUCTWORK IN CRAWLSPACES, VENTILATED ATTICS, AND PARKING GARAGES HAVING NATURAL OR MECHANICAL VENTILATION THE SAME AS OUTDOOR DUCTWORK.

ABOVEGROUND HVAC PIPE & ACCESSORY INSULATION APPLICATION SCHEDULE

	INSULATION MATERIAL & THICKNESS (INCHES)							FIELD-APPLIED JACKET MATERIAL						
	FLEXIBLE ELASTOMERIC	FIBERGLASS	MINERAL WOOL	POLYISOCYANURATE	PHENOLIC	CELLULAR GLASS	CALCIUM SILICATE	ALUMINUM	STAINLESS STEEL	PVC	SELF-ADHESIVE (FOR OUTDOOR APPLICATIONS)	PVDC (INDOOR)	PVDC (OUTDOOR)	KEYED NOTES
INDOOR PIPE SYSTEM AND SIZE (INCHES)														
CHILLED WATER & BRINE 40 DEG F & BELOW														
6 AND SMALLER		1						X		X				A
HEATING HOT WATER SUPPLY & RETURN 200 DEG F AND LOWER														
3 AND SMALLER		1						X		X				A
REFRIGERANT SUCTION & HOT GAS (RIGID COPPER)	1	1						X		X				
REFRIGERANT SUCTION & HOT GAS (SOFT COPPER)	1							X		X				
OUTDOOR (ABOVEGROUND) AND TUNNEL PIPE SYSTEM AND SIZE (INCHES)														
REFRIGERANT SUCTION & HOT GAS (RIGID COPPER)	2	2						X			X			B
REFRIGERANT SUCTION & HOT GAS (SOFT COPPER)	2													B

GENERAL NOTES

1. 'X' OR THICKNESS IN INCHES INDICATES ACCEPTABLE SELECTION. IF MORE THAN ONE SELECTION IS INDICATED, CONTRACTOR MAY SELECT FROM THOSE INDICATED SELECTIONS.
2. INSULATE PIPING WITHIN AIR HANDLING EQUIPMENT THE SAME AS INDOOR PIPING. PROVIDE ALUMINUM OR STAINLESS STEEL JACKET.

KEYED NOTES

A. PROVIDE FIELD APPLIED JACKET FOR PIPING EXPOSED IN EQUIPMENT ROOMS, STORAGE ROOMS, JANITORS CLOSETS, RECEIVING ROOMS, TEST AREAS, CIRCULATION AREAS AND SUCH AREAS SUBJECT TO DAMAGE WITHIN 10 FEET (3 METERS) OF FINISHED FLOOR.
B. PROVIDE MANUFACTURER'S RECOMMENDED PROTECTIVE COATING FOR FLEXIBLE ELASTOMERIC THERMAL INSULATION.
C. STEAM AND CONDENSATE PIPING JACKET SHALL BE STUCCO EMBOSSED.
D. PIPING WITHIN ENERGY RECOVERY UNITS SHALL BE TYPE 304 STAINLESS STEEL, SMOOTH; 0.010 INCH THICK. SEAMS AND JOINTS CAULKED WITH CHEMICALLY RESISTANT SEALER.

ABOVEGROUND PLUMBING PIPE & ACCESSORY INSULATION APPLICATION SCHEDULE

	INSULATION MATERIAL & THICKNESS (INCHES)							FIELD-APPLIED JACKET MATERIAL						
	FLEXIBLE ELASTOMERIC	FIBERGLASS	MINERAL WOOL	POLYISOCYANURATE	PHENOLIC	CELLULAR GLASS	CALCIUM SILICATE	ALUMINUM	STAINLESS STEEL	PVC	SELF-ADHESIVE (FOR OUTDOOR APPLICATIONS)	PVDC (INDOOR)	PVDC (OUTDOOR)	KEYED NOTES
INDOOR PIPE SYSTEM AND SIZE (INCHES)														
DOMESTIC COLD WATER	1	1						X		X				A
DOMESTIC HOT WATER SUPPLY & RETURN	1	1						X		X				A
CONDENSATE AND EQUIPMENT DRAIN PIPING BELOW 60 DEG F	0.75	1												

UNLESS OTHERWISE INDICATED OR SCHEDULED, DO NOT INSULATE THE FOLLOWING:
- FIRE SUPPRESSION PIPING
- UNDERGROUND PIPING
- LABORATORY GAS AND VACUUM PIPING
- MEDICAL GAS AND VACUUM PIPING
- FUEL GAS PIPING
- FUEL OIL PIPING

GENERAL NOTES

1. 'X' OR THICKNESS IN INCHES INDICATES ACCEPTABLE SELECTION. IF MORE THAN ONE SELECTION IS INDICATED FOR A SYSTEM, CONTRACTOR MAY SELECT FROM THOSE INDICATED SELECTIONS.
2. INSULATE PIPING WITHIN AIR HANDLING EQUIPMENT THE SAME AS INDOOR PIPING. PROVIDE ALUMINUM OR STAINLESS STEEL JACKET.

KEYED NOTES

A. PROVIDE FIELD APPLIED JACKET FOR PIPING EXPOSED IN EQUIPMENT ROOMS, STORAGE ROOMS, JANITORS CLOSETS, RECEIVING ROOMS, TEST AREAS, CIRCULATION AREAS AND SUCH AREAS SUBJECT TO DAMAGE, WITHIN 10 FEET (3 METERS) OF FINISHED FLOOR.
B. PROVIDE MANUFACTURER'S RECOMMENDED PROTECTIVE COATING FOR FLEXIBLE ELASTOMERIC THERMAL INSULATION.

SCHEDULES GENERAL NOTES:

TYPICAL FOR ALL SCHEDULE SHEETS:

1. REFER TO ELECTRICAL STANDARD SCHEDULES, ONE LINE DIAGRAM AND PANEL SCHEDULES FOR ADDITIONAL ELECTRICAL INFORMATION
2. PROVIDE THE FOLLOWING FACTORY-WIRED ELECTRICAL OPTIONS/ACCESSORIES WHERE INDICATED IN SCHEDULE:
   A - NON-FUSED DISCONNECT SWITCH
   B - UNIT SHALL BE SINGLE POINT ELECTRICAL CONNECTION WITH FACTORY INSTALLED DISCONNECTING MEANS AND ALL REQUIRED STARTERS AND CONTROLS
   C - SERVICE RECEPTACLE
   D - FUSED DISCONNECT SWITCH
   E - COMBINATION STARTER
   F - UNIT SHALL HAVE (2) SINGLE POINT CONNECTIONS WITH FACTORY INSTALLED DISCONNECTING MEANS AND ALL REQUIRED STARTERS AND CONTROLS. (1) CONNECTION SHALL BE FOR CONDENSING SECTION AND (1) CONNECTION SHALL BE FOR THE REMAINDER OF THE UNIT.
3. FOR MODULATION/CONTROL TYPE COLUMN, "VFC" INDICATES VARIABLE FREQUENCY CONTROLLERS, "AUTO" INDICATES AUTOMATIC OPERATION (CONTROLLED BY TEMPERATURE CONTROLS OR SELF CONTAINED CONTROLS), "MANUAL" INDICATES HAND OPERATION.
4. IF VARIABLE FREQUENCY CONTROLLERS ARE INDICATED TO BE PROVIDED AND ARE NOT INSTALLED INTEGRAL TO THE UNIT, VARIABLE FREQUENCY CONTROLLERS SHALL BE SUPPLIED BY THE MECHANICAL CONTRACTOR (UNLESS OTHERWISE NOTED) AND INSTALLED BY THE ELECTRICAL CONTRACTOR INCLUDING THE LINE SIDE AND LOAD SIDE WIRING TO THE MOTOR AND INCLUDING MISCELLANEOUS STEEL REQUIRED FOR THE SUPPORT AND MOUNTING OF THE VFC. REFER TO FLOOR PLANS FOR LOCATION.
5. WHERE EQUIPMENT IS INDICATED TO HAVE A SINGLE POINT ELECTRICAL CONNECTION, THAT EQUIPMENT SHALL COME COMPLETE WITH FACTORY INSTALLED STARTERS, MOTOR OVERLOAD PROTECTION, CONTACTORS, FUSING AND ALL NECESSARY INTERNAL WIRING AND CONTROLS. PROVIDE A FACTORY MOUNTED UNIT DISCONNECTING MEANS WHERE THE ELECTRICAL CONTRACTOR SHALL MAKE SINGLE POINT CONNECTION. INSTALL PACKAGED EQUIPMENT SUCH THAT THE ELECTRICAL CONNECTION AND CONTROLS ARE ACCESSIBLE AND HAVE CLEARANCES MEETING THE NATIONAL ELECTRICAL CODE.
6. WHERE PACKAGED EQUIPMENT IS PROVIDED, NAMEPLATE MUST INDICATE MAXIMUM OVERCURRENT PROTECTION BY HACR RATED CIRCUIT BREAKERS OR FUSES. IF FUSE PROTECTION ONLY IS INDICATED, PROVIDE A FUSIBLE DISCONNECT AND FUSES WITH THE UNIT.
7. WHERE EQUIPMENT IS DESIGNATED BY MANUFACTURER AND MODEL NUMBER, THIS IS THE BASIS OF DESIGN. IF THE CONTRACTOR ELECTS TO PROVIDE EQUIPMENT BY OTHER SPECIFIED MANUFACTURERS OR PROPOSED ALTERNATE EQUIPMENT BY THE BASIS OF DESIGN MANUFACTURER, THE CONTRACTOR SHALL BE RESPONSIBLE FOR ANY REVISIONS TO ELECTRICAL REQUIREMENTS, STRUCTURAL LOADING, OR ARCHITECTURAL APPURTENANCES AND SHALL INCLUDE THE COST OF SUCH REVISIONS IN HIS BID.
8. WHERE EQUIPMENT IS SCHEDULED TO INCLUDE A SERVICE RECEPTACLE, PROVIDE A FACTORY MOUNTED SERVICE RECEPTACLE WITH APPROPRIATE FUSES AND TRANSFORMERS CONNECTED ON THE LINE SIDE OF THE UNIT DISCONNECT. PROVIDE A NAMEPLATE ON THE DISCONNECT SWITCH INDICATING THE PRESENCE OF LIVE POWER TO THE SERVICE RECEPTACLE WHEN HE UNIT DISCONNECT IS IN THE OFF POSITION.
9. SIZE ALL EQUIPMENT FEEDERS BASED ON THE LISTED MOP (MAXIMUM OVERCURRENT PROTECTION). REFER TO THE FEEDER AND BRANCH CIRCUIT SIZING SCHEDULE ON THE ELECTRICAL STANDARD SCHEDULES SHEET.

WA
WAKELY ASSOCIATES, INC.
ARCHITECTS & ENGINEERS
30500 VAN DYKE AVE.
SUITE M-7
WARREN, MICHIGAN, 48093
TEL: 586-573-4100
FAX: 586-573-0822
E-MAIL: WA@WAKELYAIA.COM

Peter Basso Associates Inc
CONSULTING ENGINEERS
5145 Livernois, Suite 100
Troy, Michigan 48098-3276
Tel: 248-879-5666
Fax: 248-879-0007
www.PeterBassoAssociates.com
PBA Project No.: 2015-0144

FARMINGTON PUBLIC SCHOOLS - 2015 BOND
2018 PROJECTS
KENBROOK & BEECHVIEW ELEMENTARY SCHOOLS

BEECHVIEW ELEMENTARY SCHOOL
MECHANICAL SCHEDULES

PRELIMINARY ☐
DESIGN DEVELOPMENT ☐
CONSTRUCTION ■
FINAL RECORD ☐

DRAWN BY: JRM
CHECKED BY: SVM

REVISIONS:

DATE: 12-15-17
SHEET NO.: M7.1BV
JOB NO.: 171712A

g:\2015\2015-0144-00\Cad\beechview es\2015-0144-BV-M7-Sht.dwg, M7.1BV, 12/12/2017 2:33:30 PM, Suha A. Matti, _Default.pc3 ,0.09094, Peter Basso Associates Inc.

GRAVITY RELIEF HOOD SCHEDULE

UNIT IDENTIFICATION	SYSTEM SERVED	CFM	THROAT SIZE INCHES	THROAT VELOCITY FPM	STATIC PRESSURE DROP IN. W.G.	HOOD SIZE			CURB HEIGHT INCHES	HOOD CONSTRUCTION	MODEL NUMBER	REMARKS
						WIDTH INCHES	LENGTH INCHES	HEIGHT INCHES				
GRH-1	CORRIDOR	1,875	60x9	500	0.06	19	72	14	18	ALUMINUM	FGR	

NOTE:
1. MODEL NUMBERS ARE GREENHECK UNLESS OTHERWISE NOTED.
2. PROVIDE WITH BIRD SCREEN.

GRILLE, REGISTER, AND DIFFUSER SCHEDULE

UNIT IDENTIFICATION	TYPE	FACE SIZE	NECK SIZE	FRAME TYPE	ACCESSORY	CONSTRUCTION	FINISH	MODEL NUMBER	REMARKS
S-1	DIFFUSER	24x24	SEE PLANS	LAY-IN	---	STEEL	WHITE	SPD	
S-2	GRILLE	NECK SIZE +1 3/4	SEE PLANS	SURFACE	---	STEEL	WHTIE	520	
R-1	GRILLE	24x24	22x22	LAY-IN	---	STEEL	WHTIE	PDDR	
R-2	GRILLE	24x12	22x10	LAY-IN	---	STEEL	WHTIE	PDDR	
E-1	GRILLE	24x24	SEE PLANS	LAY-IN	---	STEEL	WHITE	PDDR	

NOTE:
1. MODEL NUMBERS ARE PRICE UNLESS OTHERWISE NOTED.
2. CONTRACTOR SHALL VERIFY SIZE AND QUANTITIES.

SPLIT SYSTEM AIR CONDITIONING UNIT SCHEDULE

INDOOR UNIT							OUTDOOR UNIT									REMARKS
UNIT IDENTIFICATION	TOTAL CAPACITY MBH	EVAPORATOR FAN		COOLING COIL		MODEL NUMBER	UNIT IDENTIFICATION	CONDENSING SECTION			ELECTRICAL				MODEL NUMBER	
		AIRFLOW CFM	NUMBER FANS	E.D.B. °F	E.W.B. °F			NUMBER OF COMPRESSORS	AMBIENT TEMPERTURE °F	AIRFLOW CFM	VOLTS	PHASE	FLA	MOP		
ACU-1	24.0	670/590/540	1	80.0	67.0	SSD 24	CU-1	1	95.0	1950	208	1	12.4	20	YCJD24	NOTES 3 & 4

NOTE:
1. REFER TO SCHEDULES GENERAL NOTES.
2. MODEL NUMBERS MODINE UNLESS OTHERWISE NOTED.
3. UNITS SHALL BE CAPABLE OF OPERATING DOWN TO 0 DEG. F.
4. INDOOR UNIT POWER FEED THROUGH OUTDOOR UNIT.

HORIZONTAL UNIT VENTILATOR SCHEDULE

UNIT NUMBER	FAN				COOLING COIL – CHILLED WATER								HEATING COIL								ROOM PROJECTION INCHES	MODULATION/ CONTROL TYPE	ELECTRICAL				MODEL NUMBER	REMARKS
					MINIMUM TOTAL CAPACITY MBH	AIR		WATER					MINIMUM TOTAL CAPACITY MBH	AIR		WATER							VOLTS	PHASE	MOP	OPTIONS/ ACCESSORIES		
	CFM	MINIMUM O.A. CFM	NUMBER FANS	H.P. EACH		E.D.B. °F	L.D.B. °F	FLOW GPM	E.W.T. °F	L.W.T. °F	MAXIMUM W.P.D. FT. HEAD	CONTROL VALVE W.P.D. FT. HEAD		E.D.B. °F	L.D.B. °F	FLOW GPM	E.W.T. °F	L.W.T. °F	MAXIMUM W.P.D. FT. HEAD	CONTROL VALVE W.P.D. FT. HEAD								
UV-1	1250	430	4	1/4	44.0	80.0	56.0	10.0	44.0	54.0	8.67	11.55	75.5	44.1	100.0	4.3	180.0	150.0	5.81	11.55	21-7/8"	AUTO	120	1	15	B	VUVE1250	

NOTE:
1. REFER TO SCHEDULES GENERAL NOTES.
2. MANUFACTURER BASED ON TRANE UNLESS OTHERWISE INDICATED.
3. PROVIDE UNITS 2-WAY HEATING CONTROL VALVE 2-WAY CHILLED WATER CONTROL VALVE.
4. PROVIDE NEW LOUVER. PROVIDE NEW WALL SLEEVE/SPLITTER PLATES. PROVIDE END CABINETS AS INDICATED ON FLOOR PLAN (VERIFY IN FIELD).

PACKAGED AIR COOLED LIQUID CHILLER SCHEDULE

UNIT NUMBER	CAPACITY TONS	CHILLED WATER						COMPRESSOR MOTOR			EFFICIENCY		CONDENSER		CONDENSER FAN MOTOR		MODULATION/ CONTROL TYPE	ELECTRICAL					MODEL NUMBER	REMARKS
		FLOW GPM	FLUID TYPE	E.W.T. °F	L.W.T. °F	MAXIMUM W.P.D. FT. HEAD	FOULING FACTOR	NUMBER OF COMPRESSOR	KW TOTAL	RLA EACH	MINIMUM FULL LOAD EER	MINIMUM IPLV (EER)	AMBIENT AIR TEMPERATURE °F	MINIMUM AMBIENT TEMPERATURE °F	QUANTITY	H.P. EACH		VOLTS	PHASE	FLA	MOP	OPTIONS/ ACCESSORIES		
CH-1	70	165	W	54.0	44.0	14.0	0.0001	4	80.1	(3) 72.4 (1) 55.8	10.8	15.7	95.0	32.0	6	2.0	AUTO	208	3	338	400	B	AGZ075E	

NOTE:
1. REFER TO SCHEDULES GENERAL NOTES.
2. MODEL NUMBERS ARE DAIKIN UNLESS OTHERWISE NOTED.
3. FLUID TYPE: W = WATER, PGXX = PROPYLENE GLYCOL SOLUTION XX PERCENTAGE OF GLYCOL, EGXX = ETHYLENE GLYCOL SOLUTION XX PERCENTAGE OF GLYCOL.
4. EFFICIENCY RATINGS SHALL BE IN ACCORDANCE WITH ARI STANDARD 550/590-98 WITH ADDENDA THROUGH JULY 2002.

HOT WATER HEATING COIL SCHEDULE

UNIT IDENTIFICATION	SYSTEM SERVED	MAXIMUM NUMBER ROWS	MAXIMUM FIN DENSITY FINS/INCH	CAPACITY MBH	AIR				MINIMUM FACE AREA SQ. FT.	WATER				CONTROL VALVE W.P.D. FT. HD.	MODEL NUMBER	REMARKS
					AIRFLOW CFM	E.D.B. °F	L.D.B. °F	MAXIMUM A.P.D. IN. W.G.		FLOW GPM	E.W.T. °F	L.W.T. °F	MAXIMUM W.P.D. FT. HEAD			
HC-1	OFFICE 189	2	8	5.4	200	55.2	80.0	0.19	0.4	0.5	180.0	150.0	0.2	11.55	5BS0802B	
HC-2	RECEPTION 187	1	11	17.5	660	55.2	80.0	0.13	1.2	1.4	180.0	150.0	0.9	11.55	5BS1101B	
HC-3	CLINIC 191	2	6	4.2	155	55.2	80.0	0.10	0.4	0.3	180.0	150.0	0.2	11.55	5BS0602B	
HC-4	CONFERENCE	2	6	2.2	80	55.2	80.0	0.08	0.2	0.3	180.0	150.0	0.2	11.55	5BS0602B	

NOTE:
1. MODEL NUMBERS ARE DAIKIN UNLESS OTHERWISE NOTED.
2. COIL SELECTION BASED ON .00025 FOULING FACTOR.
3. COIL SELECTIONS SHALL BE BASED ON WATER SYSTEM.

HOT WATER RADIANT CEILING PANEL SCHEDULE

UNIT IDENTIFICATION	CAPACITY BTUH/ LINEAR FT.	WATER TEMP		DIMENSIONS		FINISH	CONSTRUCTION	CONTROL VALVE W.P.D. FT. HEAD	MODEL NUMBER	REMARKS
		E.W.T. °F	L.W.T. °F	LENGTH INCHES	WIDTH INCHES					
RCP-1	194.0	180.0	150.0	SEE PLANS	12	WHITE	ALUMINUM	11.55	NOTE 2	

NOTE:
1. MODEL NUMBERS ARE AIRTEX UNLESS OTHERWISE NOTED.
2. EXTRUDED ARCHITECTURAL SPACE MASTERY SERIES HEF-2 FLUTED.

CONDENSING FUEL FIRED DOMESTIC WATER HEATER SCHEDULE

UNIT IDENTIFICATION	STORAGE CAPACITY GALLONS	FUEL TYPE	FIRING RATE MBH	RECOVERY GPH	E.W.T. °F	L.W.T. °F	MODULATION/ CONTROL TYPE	ELECTRICAL					MODEL NUMBER	REMARKS
								VOLTS	PHASE	FLA	MOP	OPTIONS/ ACCESSORIES		
DWH-1	90	NATURAL GAS	199.9	233	40.0	140.0	AUTO	120	1	3.2	15.0	B	SNA201-100	

NOTE:
1. REFER TO SCHEDULES GENERAL NOTES.
2. MODEL NUMBERS ARE LOCHINVAR UNLESS OTHERWISE NOTED.
3. PROVIDE MANUFACTURER'S CONCENTRIC VENT KIT.

UNITARY ROOFTOP AIR CONDITIONING UNIT SCHEDULE

UNIT I.D.	AREA SERVED	SUPPLY FAN								EXHAUST/RELIEF FAN		COOLING SECTION – DX								INTEGRAL AIR-COOLED CONDENSING SECTION			FILTER SECTION			CURB			MAXIMUM UNIT DIMENSIONS			MAXIMUM UNIT OPERATING WEIGHT LBS. (WITH CURB)	ARRANGEMENT (SUPPLY/RETURN)	TOTAL UNIT ELECTRICAL					MODEL NO.	NOTES
		AIRFLOW CFM	MAX MIN. OUTSIDE AIR FLOW CFM	MIN MIN. OUTSIDE AIR FLOW CFM	E.S.P. IN. W.G.	T.S.P. IN. W.G.	FAN SPEED RPM	BHP	HP	AIRFLOW CFM	E.S.P. IN. W.G.	MIXED AIR		UNIT LEAVING AIR		NET UNIT CAPACITY		NUMBER OF CIRCUITS	REFRIG. TYPE	DESIGN AMBIENT TEMP °F	MIN. AMBIENT TEMP. °F	NO. OF CAPACITY CONTROL STAGES	TYPE	AIR PRESS. DROP		TYPE		HEIGHT	LENGTH	HEIGHT (WITH CURB)	WIDTH			VOLTS	PHASE	MCA	MOP	OPTIONS/ ACCESSORIES		
												E.D.B. °F	E.W.B. °F	L.D.B. °F	L.W.B. °F	TOTAL MBH	SENSIBLE MBH							INITIAL IN. W.G.	FINAL IN. W.G.	STANDARD	VIBRATION ISOLATION SPRING CURB											
RTU-1	OFFICE	1,100	225	65	1.0	1.14	1136	0.45	1.0	1,100	0.5	80.7	66.4	55.5	55.0	40.6	25.2	1	R-410A	95.0	45.0	2	THROW AWAY	0.25	0.5	YES	NO	18	85.3	56.9	47.0	1600	BOTTOM/BOTTOM	208	3	23.0	30.0	B	LCH03654T	

NOTE:
1. REFER TO SCHEDULES GENERAL NOTES.
2. MODEL NUMBERS ARE LENNOX UNLESS OTHERWISE NOTED
3. DESIGN MINIMUM OUTSIDE AIRFLOW CFM (VENTILATION) LISTED IS BASED ON THE ESTIMATED MAXIMUM OCCUPANT LOAD. REFER TO TEMPERATURE CONTROL DRAWINGS FOR OUTSIDE AIR CONTROL SEQUENCE.
4. MERV DESIGNATES THE "MINIMUM EFFICIENCY REPORTING VALUE" AS EVALUATED UNDER ASHRAE STANDARD 52.2 1999.
5. AIR HANDLING UNIT TOTAL STATIC PRESSURE FOR VARIABLE AIR VOLUME SYSTEMS IS BASED ON THE FILTER DIRTY AIR PRESSURE DROP AND AVERAGE/MIDLIFE FILTER AIR PRESSURE DROP FOR CONSTANT VOLUME SYSTEMS UNLESS NOTED OTHERWISE.
6. UNIT SHALL HAVE HOT GAS REHEAT. REFER TO SPECIFICATIONS.

VIBRATION ISOLATOR APPLICATION SCHEDULE

EQUIPMENT TYPE	EQUIPMENT CATEGORY	HORSEPOWER AND OTHER	RPM	EQUIPMENT LOCATION						KEYED NOTES
				SLAB ON GRADE			UP TO 40 FT (12 M) FLOOR SPAN			
				BASE TYPE	ISOLATOR TYPE	MIN. DEFL., IN. (MM)	BASE TYPE	ISOLATOR TYPE	MIN. DEFL., IN. (MM)	
REFRIGATION MACHINES AND CHILLERS	RECIPROCATING	ALL	ALL	A	2	0.25 (6)	A	4	2.50 (64)	NOTE 3
	CENTRIFUGAL, SCROLL	ALL	ALL	A	1a OR 1b	0.25 (6)	A	4	1.50 (38)	
	SCREW	ALL	ALL	A	1a OR 1b	1.00 (25)	A	4	2.50 (64)	
	ABSORPTION	ALL	ALL	A	1a OR 1b	0.25 (6)	A	4	1.50 (38)	
	AIR-COOLED RECIP., SCROLL	ALL	ALL	A	2	0.25 (6)	A	4	2.50 (64)	
	AIR-COOLED SCREW	ALL	ALL	A	4	1.00 (25)	B	4	2.50 (64)	
	OPEN CENTRIFUGAL	ALL	ALL	C	1a OR 1b	0.25 (6)	C	4	1.50 (38)	
PACKAGED ROOFTOP EQUIPMENT	ALL	≥10 TONS REFRIG. OR ≥10 HP FAN	ALL				D OR E	3	1.50 (38)	NOTES 1, 3, 4, 5

NOTES:
1. THRUST RESTRAINTS: PROVIDE THRUST RESTRAINTS BETWEEN FAN DISCHARGE AND DUCT (IN PAIRS, LOCATED ON THE CENTERLINE OF THE DISCHARGE OUTLET OF THE FAN, BRIDGING THE FLEXIBLE DUCT CONNECTOR) FOR ALL FAN HEADS, FOR AXIAL AND CENTRIFUGAL FANS UNITS OPERATING AT 2 INCHES OR GREATER TOTAL STATIC PRESSURE AND AS SHOWN ON DRAWINGS. SPRING DEFLECTION SHALL BE SAME AS THE SUPPORT ISOLATORS.
2. PIPING RISER ISOLATION: PROVIDE PIPE RISER RESILIENT ANCHORS, SPRING MOUNTS AND RESILIENT PIPE GUIDES CAPABLE OF DISTRIBUTING THE LOADS WITHIN THE BUILDING DESIGN LIMITS AT THE SUPPORT POINTS.
3. HORIZONTAL PIPING VIBRATION ISOLATION: PROVIDE TYPE 8a OR 8b SPRING HANGERS FOR PIPING CONNECTED TO VIBRATION ISOLATED EQUIPMENT FOR ALL PIPING IN MECHANICAL ROOMS OR THE FOLLOWING MINIMUM HORIZONTAL DISTANCES FROM THE ISOLATED EQUIPMENT: UP TO 6" – 50 FEET (1 1/2" MINIMUM DEFLECTION), 8" AND LARGER – 100 FEET (2 1/2" MINIMUM DEFLECTION), WHICHEVER IS GREATER, AND AS SHOWN ON DRAWINGS. THE FIRST 4 HANGERS FROM THE ISOLATED EQUIPMENT SHALL BE TYPE 8b.
4. DUCTWORK VIBRATION ISOLATION: PROVIDE TYPE 8a OR 8b SPRING HANGERS FOR DUCTWORK WITH A CROSS SECTION OF 2 SQUARE FEET OR GREATER CONNECTED TO AIR HANDLING UNITS, RETURN OR RELIEF FANS, AND VIBRATION ISOLATED EQUIPMENT FOR ALL SUCH DUCTWORK IN MECHANICAL ROOMS OR FOR A MINIMUM HORIZONTAL DISTANCE OF 100 FEET FROM THE ISOLATED EQUIPMENT, WHICHEVER IS GREATER, AND AS SHOWN ON DRAWINGS (3/4" MINIMUM DEFLECTION).
5. IF SPAN DOES NOT EXCEED 20 FT, SPRING DEFLECTION MAY BE 1.0 IN AND TYPE D BASE MAY BE USED. FOR SPANS GREATER THAN 20 FT, USE SPRING DEFLECTION INDICATED AND TYPE E BASE.

BASE TYPES:

BASE TYPE A – NO BASE, ISOLATORS ATTACHED DIRECTLY TO EQUIPMENT.
BASE TYPE B – STRUCTURAL, STEEL RAILS OR BASE.
BASE TYPE C – CONCRETE INERTIA BASE.
BASE TYPE D – CURB – MOUNTED ALUMINUM BASE WITH 1" DEFL. SPRING ISOLATORS
BASE TYPE E – CURB – MOUNTED STEEL BASE WITH ADJUSTABLE 1", 2" OR 3" DEFL. SPRING ISOLATORS

ISOLATOR TYPES:

ISOLATOR TYPE 1a – ELASTOMERIC ISOLATION PAD.
ISOLATOR TYPE 1b – ELASTOMERIC ISOLATION PAD WITH STEEL LOAD BEARING PLATE.
ISOLATOR TYPE 2 – ELASTOMERIC FLOOR ISOLATOR.
ISOLATOR TYPE 3 – FREE STANDING SPRING FLOOR ISOLATOR.
ISOLATOR TYPE 4 – RESTRAINED SPRING ISOLATOR.
ISOLATOR TYPE 5 – THRUST RESTRAINT.
ISOLATOR TYPE 6 – AIR SPRING.
ISOLATOR TYPE 7 – ELASTOMERIC HANGERS.
ISOLATOR TYPE 8a – SPRING HANGERS.
ISOLATOR TYPE 8b – SPRING HANGERS WITH VERTICAL-LIMIT STOP.

WAKELY ASSOCIATES, INC.
ARCHITECTS & ENGINEERS
30500 VAN DYKE AVE.
SUITE M-7
WARREN, MICHIGAN, 48093
TEL. 586-573-4100
FAX. 586-573-0822
E-MAIL: WA@WAKELYAIA.COM

Peter Basso Associates Inc
CONSULTING ENGINEERS
5145 Livernois, Suite 100
Troy, Michigan 48098-3276
Tel: 248-679-5668
Fax: 248-679-0007
www.PeterBassoAssoc.sites.com
PBA Project No.: 2015-0144

FARMINGTON PUBLIC SCHOOLS - 2015 BOND
2018 PROJECTS
KENBROOK & BEECHVIEW ELEMENTARY SCHOOLS

BEECHVIEW ELEMENTARY SCHOOL

MECHANICAL SCHEDULES

PRELIMINARY ☐
DESIGN DEVELOPMENT ☐
CONSTRUCTION ■
FINAL RECORD ☐

DRAWN BY: JRM
CHECKED BY: SVM

REVISIONS:

DATE: 12-15-17

SHEET NO.:

M7.2BV

JOB NO.: 171712A

g:\2015\2015-0144-00\Cad\beechview es\2015-0144-BV-M7-Sht.dwg, M7.2BV, 12/12/2017 2:33:32 PM, Suha A. Matti, _Default.pc3 ,0.09094, Peter Basso Associates Inc.

PLUMBING CONNECTION SCHEDULE

UNIT IDENTIFICATION	CW INCHES	HW INCHES	SAN INCHES	VENT INCHES	REMARKS
UR-1	3/4	–	2	1 1/2	
WC-1/WC-2	1 1/2	–	4	2	
LAV-1	1/2	1/2	1 1/2	1 1/2	
SK-1/WF-1	3/4	3/4	1 1/2	1 1/2	
BF-1/DF-1	1/2	–	1 1/2	1 1/2	
FD-1	–	–	3	–	

NOTE: INDIVIDUAL WATER LINE BRANCHES, WASTE LINES, VENTS, AND TRAPS FOR CONNECTION TO INDIVIDUAL FIXTURES, FIXTURE FITTINGS, AND SPECIALTIES SHALL BE IN ACCORDANCE WITH THE FOLLOWING SCHEDULE OR AS INDICATED ON DRAWINGS, WHICHEVER IS GREATER.

THERMOSTATIC MIXING VALVE SCHEDULE

UNIT IDENTIFICATION	MINIMUM FLOW GPM	MAXIMUM FLOW GPM	PRESSURE DROP AT MAXIMUM FLOW PSIG	MODEL NUMBER	REMARKS
MV-1	1	25	5	TM-820B-LF-DT	

NOTE:
1. MODEL NUMBERS ARE LEONARD UNLESS OTHERWISE NOTED.

PLUMBING FIXTURE SCHEDULE

UNIT IDENTIFICATION	WATER CLOSET & URINAL						FLUSH VALVE		TOILET SEAT	REMARKS
	FIXTURE MATERIAL	FIXTURE COLOR	MOUNTING STYLE	BOWL TYPE	SUPPLY SPUD LOCATION	MANUFACTURER/ MODEL	CONSUMPTION (GALLONS PER FLUSH)	MANUFACTURER/ MODEL	MANUFACTURER/ MODEL	
WC-1	VITREOUS CHINA	WHITE	FLOOR	ELONGATED	TOP	KOHLER/K-4406	1.6	SLOAN/ROYAL 111-1.6 SFSM	KOHLER/K-4731-SC	WITH BOTTOM DISCHARGE OUTLET.
WC-2 (A.D.A.)	VITREOUS CHINA	WHITE	FLOOR	ELONGATED	TOP	KOHLER/K-4405	1.6	SLOAN/ROYAL 111-1.6 SFSM	KOHLER/K-4731-SC	WITH BOTTOM DISCHARGE OUTLET.
UR-1	VITREOUS CHINA	WHITE	WALL	ELONGATED	TOP	KOHLER/K-4904-ET	1.0	SLOAN/ROYAL 186-1 SFSM	---	WITH BACK OUTLET.

APPROVED MANUFACTURERS:
WATER CLOSETS – KOHLER, AMERICAN STANDARD, SLOAN.
TOILET SEATS – KOHLER, AMERICAN STANDARD, BEMIS, CHURCH & OLSONITE.
FLUSHOMETERS – SLOAN

UNIT IDENTIFICATION	LAVATORY & SINKS						FAUCET			REMARKS
	FIXTURE MATERIAL	FIXTURE COLOR	MOUNTING STYLE	BOWL DIMENSIONS L x W x D INCHES	OVERALL DIMENSIONS L x W INCHES	MANUFACTURER/ MODEL	FLOW RATE GALLONS/ MINUTE	DESCRIPTION	MANUFACTURER/ MODEL	
LAV-1	VITREOUS CHINA	WHITE	WALL	15 x 10 x 6 1/2	21 1/4 x 18 1/8	KOHLER/K-2007	MAX. 0.25 GAL/USE	BRASS/CHROM PLATED, SINGLE FAUCET WITH METERED PUSH BUTTON OPERATION W/ VANDAL PROOF AERATOR	CHICAGO FAUCETS / 333-665VPA	NOTE 2, COMPLETE W/THERMOSTATIC MIXING VALVE (MV-2), GRID DRAIN AND PROTECTIVE SHIELDING PIPE COVERS.
WF-1 (A.D.A)	CORTERRA	---	WALL	---	55 x 20-3/4	ACORN / MERIDIAN 3792-1-H-DV	0.5/STATION	2-STATION MANUAL METERED FAUCETS (PUSH BUTTON)	---	BACK OUTLET, 2-STATION, INTEGRAL ASSE 1070 MIXING VALVE, ARCHITECT TO SELECT COLOR
SK-1	STAINLESS STEEL	STAINLESS STEEL	TOP MOUNT	28 x 16 x 7 1/2	31 x 22 x 7 5/8	ELKAY/LR3122PD	1.5	BRASS/CHROME PLATED 8" FIXED CENTERS, 8" RIGID/SWING GOOSENECK, 4" VANDAL PROOF WRIST BLADE HANDLE, SIDE SPRAY	CHICAGO FAUCETS / 200-AGN8AE35-317AB	NOTE 2, COMPLETE WITH THERMOSTATIC MIXING VALVE, GRID DRAIN AND PROTECTIVE SHIELDING PIPE COVERS.
SK-2	STAINLESS STEEL	STAINLESS STEEL	TOP MOUNT	16 x 13 1/2 x 7 1/2	25 x 17 x 7 5/8	ELKAY/DRKRQ2517	1.5	BRASS/CHROME PLATED 8" FIXED CENTERS, 5 1/4" RIGID/SWING GOOSENECK, 4" VANDAL PROOF WRIST BLADE HANDLE, 1/4 TURN OPERATION, 70° RESTRICTED SWING	CHICAGO FAUCETS / 527-GN2A317ABCP	NOTE 2, COMPLETE WITH THERMOSTATIC MIXING VALVE (MV-2), ELKAY "LK1141A" FLEXIBLE BUBBLER

UNIT IDENTIFICATION	FLOOR DRAINS & FLOOR SINKS					ACCESSORIES AND FEATURES	MANUFACTURER/MODEL	REMARKS
	PATTERN	TOP SHAPE	OUTLET SIZE INCHES	OUTLET TYPE	COATING			
FD-1	FLOOR DRAIN	ROUND	3	BOTTOM	ENAMEL	SEEPAGE FLANGE, CLAMPING DEVICE	JAY R. SMITH / 2005Y-NB-A	7 INCH DIAMETER NICKEL BRONZE TOP STRAINER, COMPLETE WITH TRAP SEAL PROTECTION DEVICE (SURESEAL), REFER TO SPECIFICATIONS. PROVIDE SEDIMENT BUCKET
FS-1	FLOOR SINK	ROUND	3	BOTTOM	ENAMEL	SEEPAGE FLANGE, CLAMPING DEVICE, FULL GRATE WITH CENTER OPENING	ZURN/Z1960-3	INSTALL RIM OF FLOOR SINK FLUSH WITH FINISHED FLOOR. COMPLETE W/TRAP SEAL PROTECTION DEVICE (SURESEAL). REFER TO SPECIFICATIONS

NOTE:
1. PROVIDE GRID WASTE OUTLET FOR ALL SINKS.
2. PROVIDE CHROME PLATED, CAST BRASS P-TRAP AND WASTE TO WALL ESCUTCHEON.

APPROVED MANUFACTURERS:
LAVATORIES – KOHLER, AMERICAN STANDARD, SLOAN, & ZURN.
SINKS – ELKAY & JUST.
SERVICE SINKS – KOHLER, AMERICAN STANDARD & ZURN.
FAUCETS – CHICAGO FAUCETS, AMERICAN STANDARD, & SLOAN.
FLOOR DRAINS – JOSAM, MIFAB, SIOUX CHIEF, JAY R. SMITH, TYLER PIPE, WATTS & ZURN.

UNIT IDENTIFICATION	ELECTRIC WATER COOLER & DRINKING FOUNTAIN						BUBBLER			REMARKS
	FIXTURE MATERIAL	FIXTURE COLOR	MOUNTING STYLE	NUMBER OF BOWLS	OVERALL DIMENSIONS L x W x D INCHES	MANUFACTURER/ MODEL	STYLE	FLOW RATE	ELECTRICAL	
BF-1	STAINLESS STEEL	SATIN FINISH	WALL MOUNTED	1	28 1/8 x 18 1/4 x 5 3/8	MURDOCK BF4-BCD	VANDAL-RESISTANT	---	120/1PH	NON-FILTERED, COMPLETE WITH MOUNTING FRAME
DF-1	STAINLESS STEEL	SATIN FINISH	WALL MOUNTED	1	12 x 18 x 6	MURDOCK A151400F-AP1-CSC	VANDAL-RESISTANT	---	---	ACCESS PANEL AND CARRIER

APPROVED MANUFACTURERS:
BOTTLE FILLER – MURDOCK.
DRINKING FOUNTAINS – MURDOCK

WA

WAKELY ASSOCIATES, INC.
ARCHITECTS & ENGINEERS

30500 VAN DYKE AVE.
SUITE M-7
WARREN, MICHIGAN, 48093

TEL. 586-573-4100
FAX. 586-573-0822
E-MAIL: WA@WAKELYAIA.COM

Peter Basso Associates Inc
CONSULTING ENGINEERS
5145 Livernois, Suite 100
Troy, Michigan 48098-3276
Tel: 248-879-5668
Fax: 248-879-0007
www.PeterBassoAssociates.com
PBA Project No. 2015-0144

FARMINGTON PUBLIC SCHOOLS - 2015 BOND
2018 PROJECTS
KENBROOK & BEECHVIEW ELEMENTARY SCHOOLS

BEECHVIEW ELEMENTARY SCHOOL

MECHANICAL SCHEDULES

PRELIMINARY ☐
DESIGN DEVELOPMENT ☐
CONSTRUCTION ■
FINAL RECORD ☐

DRAWN BY:
CHECKED BY:

REVISIONS:

DATE: 12-15-17

SHEET NO.:
M7.3BV

JOB NO.: 171712A

g:\2015\2015-0144-00\Cad\beechview es\2015-0144-BV-M7-SH.dwg, M7.3BV, 12/12/2017 2:33:32 PM, Suha A. Matti, _Default.pc3 ,0.09094, Peter Basso Associates Inc.

TEMPERATURE CONTROL - SYMBOLS LIST

SCHEMATIC SYMBOLS

SYMBOL	DESCRIPTION
AFC	AIR FLOW CONTROLLER
AQ	AQUASTAT, STRAP ON BULB
CO2	CARBON DIOXIDE SENSOR – WALL MOUNTED
CO2	CARBON DIOXIDE SENSOR – DUCT MOUNTED
CO	CARBON MONOXIDE SENSOR – WALL MOUNTED
CO	CARBON MONOXIDE SENSOR – DUCT MOUNTED
CS	CURRENT SWITCH
CT	CURRENT TRANSMITTER
	DAMPER – INLET VANES
	DAMPER – OPPOSED BLADE
	DAMPER – PARALLEL BLADE
M	DAMPER MOTOR
M	DAMPER MOTOR W/ POSITIVE POSITIONER
DPT	DIFFERENTIAL PRESSURE TRANSMITTER
DPS	DIFFERENTIAL PRESSURE SWITCH
CM	FIRE ALARM SYSTEM, ADDRESSABLE CONTROL MODULE
IM	FIRE ALARM SYSTEM, ADDRESSABLE INTERFACE MODULE
FMS	FLOW MEASURING STATION
FM	FLOW METER
FS	FLOW SWITCH
FZ	FREEZESTAT
F	GAUGE – FLOW
P	GAUGE – PRESSURE
T	GAUGE – TEMPERATURE
	GUARD FOR STAT OR SENSOR
	HUMIDIFIER
H	HUMIDISTAT OR HUMIDITY SENSOR (AS DEFINED ON TC DRAWINGS)
H	HUMIDITY SENSOR, DUCT MOUNTED
LVL	LEVEL SWITCH OR TRANSMITTER
LS	LIMIT SWITCH
	LINE – ELECTRIC
	LINE – PNEUMATIC
M	MAIN CONTROL AIR SUPPLY
M	MOTOR STARTER
OS	OCCUPANCY SENSOR
R	PILOT LIGHT OR BEACON R – RED LENS A – AMBER LENS B – BLUE LENS G – GREEN LENS
PS	PRESSURE SWITCH
PT	PRESSURE TRANSMITTER
R	RELAY, ELECTRIC
N	SELECTOR SWITCH, (N=NUMBER OF POSITIONS)
AI	SIGNAL – DDC/BAS, ANALOG INPUT
AO	SIGNAL – DDC/BAS, ANALOG OUTPUT
DI	SIGNAL – DDC/BAS, DIGITAL INPUT
DO	SIGNAL – DDC/BAS, DIGITAL OUTPUT
AI	SIGNAL – PACKAGED EQUIPMENT, ANALOG INPUT
AO	SIGNAL – PACKAGED EQUIPMENT, ANALOG OUTPUT
DI	SIGNAL – PACKAGED EQUIPMENT, DIGITAL INPUT
DO	SIGNAL – PACKAGED EQUIPMENT, DIGITAL OUTPUT

NOTE: REFER TO MECHANICAL STANDARDS ON DRAWING M0.1 FOR ADDITIONAL SYMBOLS & ABBREVIATIONS THAT MAY BE USED ON TEMPERATURE CONTROL DRAWINGS.

SCHEMATIC SYMBOLS (CONT.)

SYMBOL	DESCRIPTION
DD	SMOKE DETECTOR – DUCT MOUNTED
SD	SMOKE DETECTOR – SPACE MOUNTED
S/S	START/STOP RELAY
SPT	STATIC PRESSURE TRANSMITTER
SP	STATIC PRESSURE SENSOR OR PROBE
SW	SWITCH
T	TEMPERATURE SENSOR – RIGID ELEMENT IN WELL
T	TEMPERATURE SENSOR – STRAP ON BULB
T	TEMPERATURE SENSOR – DUCT MOUNTED AVG ELEMENT
T	TEMPERATURE SENSOR – DUCT MOUNTED RIGID ELEMENT
T	THERMOSTAT OR TEMPERATURE SENSOR (AS DEFINED ON TC DRAWINGS)
T N	THERMOSTAT FOR NIGHT SETBACK
XF	TRANSFORMER
	VALVE – 2 WAY CONTROL VALVE
	VALVE – 3 WAY CONTROL VALVE
M	VALVE – 2 WAY CONTROL W/ POSITIONER
M	VALVE – 3 WAY CONTROL W/ POSITIONER
VFC	VARIABLE FREQUENCY CONTROLLER
VS	VELOCITY SENSOR
VIB	VIBRATION SWITCH
V	VOLTAGE SENSOR

WIRING SYMBOLS

SYMBOL	DESCRIPTION
	AUDIBLE DEVICE (AS DEFINED ON TC DRAWINGS)
M/S	COIL – MOTOR STARTER CONTACTOR
R	COIL – RELAY
TDR	COIL – TIME DELAY RELAY
VFC	COIL – VARIABLE FREQUENCY CONTROLLER CONTACTOR
	COIL – EP OR SOLENOID VALVE
	CONTACT – INSTANT OPERATING, NO
	CONTACT – INSTANT OPERATING, NC
	CONTACT – TIMED AFTER COIL IS ENERGIZED, NOTC
	CONTACT – TIMED AFTER COIL IS ENERGIZED, NCTO
	CONTACT – TIMED AFTER COIL IS DE-ENERGIZED, NOTO
	CONTACT – TIMED AFTER COIL IS DE-ENERGIZED, NCTC
	GROUND
	MOTOR, SINGLE PHASE
R	PILOT LIGHT OR BEACON R – RED LENS A – AMBER LENS B – BLUE LENS G – GREEN LENS
R	PILOT LIGHT, WITH PUSH-TO-TEST
	PUSH BUTTON – MOMENTARY CONTACT, NO
	PUSH BUTTON – MOMENTARY CONTACT, NC
	PUSH BUTTON – MOMENTARY CONTACT, NO & NC
	PUSH BUTTON – MOMENTARY, NO (MUSHROOM HEAD)
	PUSH BUTTON – MOMENTARY, NC (MUSHROOM HEAD)

WIRING SYMBOLS (CONT.)

SYMBOL	DESCRIPTION
1 2	SWITCH – 2 POSITION SELECTOR
H O A	SWITCH – 3 POSITION SELECTOR HAND/OFF/AUTO
	SWITCH – FLOW (AIR, WATER, ETC.), NO
	SWITCH – FLOW (AIR, WATER, ETC.), NC
	SWITCH – LIMIT, NO
	SWITCH – LIMIT, NO, HELD CLOSED
	SWITCH – LIMIT, NC
	SWITCH – LIMIT, NC, HELD OPEN
	SWITCH – LIQUID LEVEL, NO
	SWITCH – LIQUID LEVEL, NC
	SWITCH – MANUAL SPST, NO
	SWITCH – MANUAL DPDT, NO
	SWITCH – MANUAL SPST, NC
	SWITCH – MANUAL DPDT, NC
	SWITCH – MANUAL SPDT
	SWITCH – MANUAL DPDT
	SWITCH – PRESSURE & VACUUM, NO
	SWITCH – PRESSURE & VACUUM, NC
	SWITCH – TEMPERATURE ACTUATED, NO
	SWITCH – TEMPERATURE ACTUATED, NC
	THERMAL OVERLOAD, SINGLE PHASE
OL'S	THERMAL OVERLOAD CONTACTS – 3 PHASE
	TRANSFORMER
	WIRE TERMINATION AT DEVICE
	WIRE TO WIRE TERMINATION
	WIRING NOT CONNECTED

WIRING TERMS

ABBREVIATION	DESCRIPTION
SPST	SINGLE POLE SINGLE THROW
SPDT	SINGLE POLE DOUBLE THROW
DPST	DOUBLE POLE SINGLE THROW
DPDT	DOUBLE POLE DOUBLE THROW
NO	NORMALLY OPEN
NC	NORMALLY CLOSED
NOTO	NORMALLY OPEN TIMED OPEN
NOTC	NORMALLY OPEN TIMED CLOSED
NCTO	NORMALLY CLOSED TIMED OPEN
NCTC	NORMALLY CLOSED TIMED CLOSED

NOTE: SOME SYMBOLS & ABBREVIATIONS SHOWN MAY NOT APPLY TO THIS PROJECT.

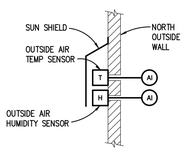

OA SENSOR INSTALLATION DETAIL

NO SCALE

SEQUENCE OF OPERATION

OUTSIDE AIR SENSORS DETAIL:

1. REPLACE EXISTING OA TEMPERATURE SENSOR WITH A NEW OA TEMPERATURE AND RELATIVE HUMIDITY SENSOR IN THE SAME LOCATION.
2. PROVIDE OA TEMPERATURE, HUMIDITY, AND ENTHALPY CALCULATION ON BACNET FOR CONTROL DECISIONS AND DISPLAY AT THE BAS.

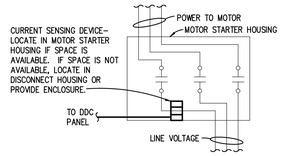

CURRENT SWITCH INSTALLATION DETAIL

TYPICAL FOR ALL CURRENT SWITCHES USED ON FAN AND PUMP MOTORS.
NOTES:

1. ALL MOTOR LOADS SHOWN ON DRAWINGS SHALL HAVE CURRENT SWITCHES FOR STATUS INDICATION AND RUN HOURS TOTALIZATION BY DDC TO THE BAS.
2. INSTALL CURRENT SWITCH ON MOTOR LEADS. CURRENT SWITCH SHALL BE ADJUSTED TO MEET THE CURRENT DRAW REQUIRED TO DETECT FAN BELT LOSS, PUMP COUPLING DETACHMENT, OR VFC LOSS.

SEQUENCE OF OPERATION

CURRENT SWITCH INSTALLATION:

1. ALL DELAY TIMERS DESCRIBED IN THE SEQUENCE SHALL BE ADJUSTABLE BY SYSTEM OPERATORS (CREATE REQUIRED VIRTUAL POINTS).
2. UPON FAN OR PUMP MOTOR START OR STOP, AND AFTER 120 SECONDS (ADJUSTABLE) DELAY BY DDC, IF THE CURRENT DRAW IS NOT APPROPRIATE, DDC SHALL ALARM THE MOTOR STATUS POINT.
3. WHEN FAN OR PUMP IS ON AND NOT IN ALARM, DDC SHALL TOTALIZE RUN TIME HOURS FOR BAS USE.

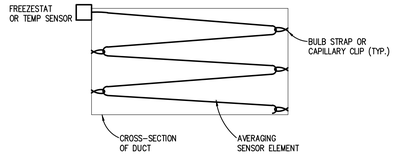

AVERAGING ELEMENT INSTALLATION DETAIL

NO SCALE

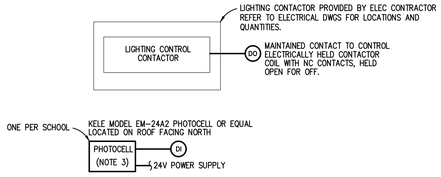

EXTERIOR LIGHTING CONTROLLER

NOTES:

1. REFER TO LIGHTING SYSTEM AND CONTROLLER DETAILS ON ELECTRICAL DRAWINGS.
2. COORDINATE WIRING REQUIREMENTS AND TERMINATIONS WITH ELECTRICAL CONTRACTOR.
3. TC CONTRACTOR SHALL PROVIDE PHOTOCELL, 24V POWER SUPPLY AND ASSOCIATED WIRING FOR BAS FOR MONITORING AND OVERRIDE OFF CONTROL OF EXTERIOR LIGHTING SCHEDULES.

SEQUENCE OF OPERATION:

1. DDC SHALL CONTROL INTERIOR LIGHTING ZONE(S) BASED ON TIME SCHEDULE.
2. FOR EXTERIOR LIGHTING CONTROLLERS: DDC MONITORED PHOTOCELL SHALL BE USED FOR "ON" CONTROL BASED ON SCHEDULED OPERATION AND BAS CONTROL "OFF" AS DIRECTED BY OWNER.

GENERAL NOTES:

1. THESE GENERAL NOTES SHALL BE APPLICABLE FOR ALL TC DRAWINGS.
2. "PROVIDE" IS DEFINED AS FURNISH AND INSTALL".
3. TC CONTRACTOR SHALL BE RESPONSIBLE TO COMPLY WITH ALL APPLICABLE CODES AND STANDARDS.
4. FOR TEMPERATURE CONTROL DRAWINGS ONLY: ALL DETAILED INFORMATION IDENTIFIED WITH HEAVY LINE WEIGHT SHALL BE PROVIDED BY TC CONTRACTOR. ALL OTHER INFORMATION IDENTIFIED WITH LIGHT LINE WEIGHT SHALL BE PROVIDED BY OTHER TRADES.
5. ALL CONTROL SCHEMATICS AND WIRING DIAGRAMS ARE FOR THE CLARIFICATION OF EQUIPMENT INTERLOCKING FUNCTIONS AND THE INTERFACE OF VARIOUS CONTRACTORS'S WORK AND SHALL NOT BE MISTAKEN AS SHOP DRAWINGS FOR ACTUAL INSTALLATION.
6. TC CONTRACTOR SHALL PROVIDE DDC CONTROLLERS AS REQUIRED TO MEET INTENT OF DESIGN DOCUMENTS. REFER TO THE PLANS FOR THE DDC FUNCTIONS THAT APPLY TO EACH MECHANICAL SYSTEM.
7. ALL TC PROVIDED COMPONENTS AND ALL TC CONTRACTOR INSTALLED WIRING SHALL BE LABELED PER SPECIFICATIONS.
8. ALL WIRING AND SYSTEM CONTROL VOLTAGES SHALL BE IN ACCORDANCE WITH THE EQUIPMENT MANUFACTURER'S RECOMMENDATION AND THE ELECTRICAL SPECIFICATIONS.
9. VARIABLE FREQUENCY CONTROLLERS, FAN AND PUMP MOTOR STARTERS, STARTER WIRING, CONTROL VOLTAGE TRANSFORMERS AND ASSOCIATED POWER WIRING SHALL BE PROVIDED BY OTHER TRADES.
10. DUCT SMOKE DETECTORS SHALL BE FURNISHED, INSTALLED AND WIRED TO THE FIRE ALARM SYSTEM BY THE ELECTRICAL CONTRACTOR. ELECTRICAL SHALL PROVIDE FIRE ALARM SYSTEM CONTROL MODULES FOR REQUIRED SAFETIES TO MOTOR STARTERS OR VFCs AS INDICATED. CONTROL MODULES SHALL BE LOCATED NEAR RESPECTIVE MOTOR STARTERS OR VFCs. TC CONTRACTOR SHALL PROVIDE INTERLOCK WIRING FROM CONTROL MODULES TO MOTOR STARTERS OR VFCs.
11. ALL DDC AND CONTROL INTERLOCK WIRING SHALL BE BY TC CONTRACTOR UNLESS OTHERWISE NOTED. TC CONTRACTOR SHALL COORDINATE WITH VFC AND MOTOR STARTER SUPPLIERS TO DETERMINE EXACT WIRING REQUIREMENTS AND TERMINATION POINTS.
12. ALL DDC AND CONTROL INTERLOCK WIRING BETWEEN COMPONENTS SHALL BE INSTALLED WITHOUT INTERMEDIATE STOPS. WIRE SPLICING AT INTERMEDIATE TERMINAL STRIPS IS NOT ACCEPTABLE.
13. ALL ELECTRICAL WIRING AND RACEWAY SYSTEMS SHALL COMPLY WITH ELECTRICAL SPECIFICATION REQUIREMENTS. WHERE RACEWAY IS REQUIRED, TWO SEPARATE ELECTRICAL RACEWAY SYSTEMS SHALL BE PROVIDED: ONE FOR 120V WIRING AND THE OTHER FOR 24V WIRING.
14. TC CONTRACTOR SHALL BE RESPONSIBLE FOR ALL POWER SUPPLIES REQUIRED FOR TC SYSTEM UNLESS OTHERWISE NOTED. REFER TO ELECTRICAL PANEL SCHEDULES FOR SPARE CIRCUITS OR CIRCUITS DEDICATED TO TEMPERATURE CONTROLS. COORDINATE CIRCUIT USE WITH ELECTRICAL CONTRACTOR.
15. TC CONTRACTOR SHALL VERIFY EXACT LOCATION OF ALL FIELD MOUNTED COMPONENTS.
16. THERMOSTATS AND SPACE TEMPERATURE SENSORS SHALL BE MOUNTED 4'–0" ABOVE FINISHED FLOOR UNLESS NOTED OTHERWISE. PROVIDE GUARDS FOR SPACE TEMP SENSORS LOCATED IN PUBLIC AREAS.
17. TC CONTRACTOR SHALL PROVIDE AUXILIARY PANELS FOR REQUIRED PANEL MOUNTED EQUIPMENT SUCH AS RELAYS, TRANSDUCERS, CONTROL TRANSFORMERS, ETC. AUXILIARY PANELS SHALL BE LOCATED NEXT TO ASSOCIATED DDC PANEL.
18. REMOTELY MOUNTED FIELD DEVICES SUCH AS RELAYS, CONTROL TRANSFORMERS, ETC., SHALL BE HOUSED IN AN ENCLOSURE PROVIDED BY THE TC CONTRACTOR.
19. CONTROL TRANSFORMERS WHEN REQUIRED SHALL BE SIZED FOR 150% OF ACTUAL LOAD.
20. FREEZESTATS SHALL BE MOUNTED ON UPSTREAM FACE OF COOLING COILS. FREEZESTAT QUANTITY SHALL BE ONE PER 20 SQ. FT OF CROSS SECTIONAL AREA.
21. CURRENT SWITCHES USED FOR OPERATIONAL STATUS SHALL HAVE CURRENT THRESHOLD SETPOINT ADJUSTED TO INDICATE BELT OR DRIVE FAILURE.
22. ALL CONTROL VALVES, CONTROL DAMPERS AND ASSOCIATED CONTROL ACTUATORS IDENTIFIED ON TC DRAWINGS SHALL BE FURNISHED BY TC CONTRACTOR UNLESS OTHERWISE NOTED. DAMPER SIZE AND LOCATIONS ARE INDICATED ON MECHANICAL FLOOR PLAN DRAWINGS.
23. ALL CONTROL VALVES AND DAMPERS FURNISHED BY THE TC CONTRACTOR SHALL BE INSTALLED BY THE MECHANICAL CONTRACTOR. ALL PIPE PENETRATIONS AND BASIC FITTINGS REQUIRED FOR SENSOR INSTALLATIONS SHALL BE PROVIDED BY MECHANICAL CONTRACTOR.
24. DAMPER ACTUATORS SHALL BE INSTALLED BY TC CONTRACTOR.
25. ALL INSTRUMENTATION TUBING REQUIRED FOR DPS AND DPT COMPONENT INSTALLATIONS SHALL BE PROVIDED BY TC CONTRACTOR.
26. TC CONTRACTOR SHALL FIELD MOUNT ALL REQUIRED PACKAGED CONTROL COMPONENTS FURNISHED BY EQUIPMENT SUPPLIERS WHERE INDICATED. ALL REQUIRED 24V AND 120V FIELD WIRING SHALL BE PROVIDED BY TC CONTRACTOR UNLESS NOTED OTHERWISE. TC CONTRACTOR SHALL COORDINATE SPECIFIC SYSTEM WIRING REQUIREMENTS WITH PACKAGED EQUIPMENT SUPPLIERS.

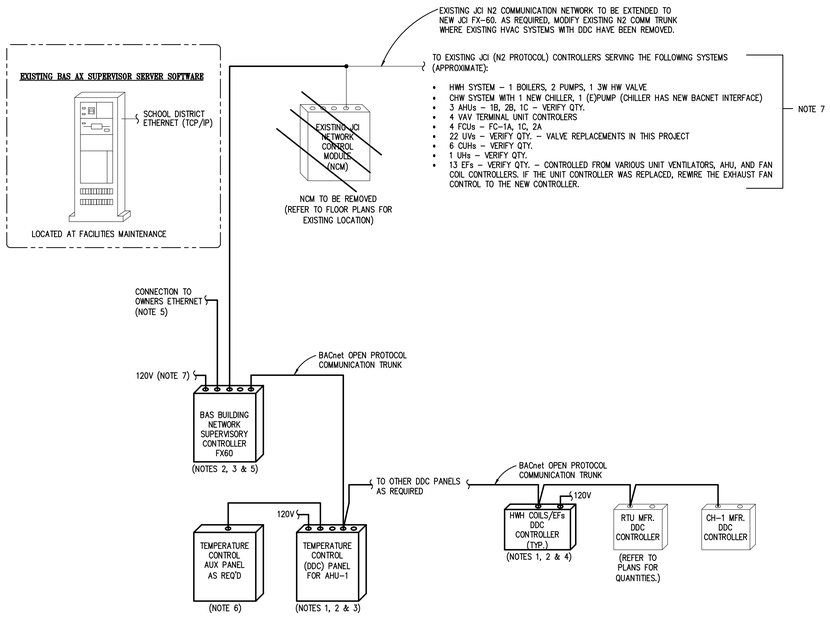

DDC SYSTEM ARCHITECTURE

NO SCALE

NOTES:

1. REFER TO TEMPERATURE CONTROL SCHEMATICS FOR THE REQUIRED POINTS ASSOCIATED FOR EACH SYSTEM.
2. TC CONTRACTOR SHALL DETERMINE DDC PANEL QUANTITY BASED ON POINT DENSITIES AND AVAILABLE MOUNTING SPACE. UNLESS SPECIFICALLY NOTED IN DESIGN DRAWINGS, TC CONTRACTOR SHALL LOCATE DDC PANELS AND COORDINATE WITH OTHER TRADES.
3. TC CONTRACTOR SHALL PROVIDE REQUIRED POWER SUPPLIES FROM SPARE CIRCUITS WHERE IDENTIFIED ON NEW ELECTRICAL PANEL SCHEDULES, FROM EXISTING TEMPERATURE CONTROL POWER CIRCUITS OR FROM EXISTING ELECTRICAL PANELBOARDS WHERE AVAILABLE AS FIELD DETERMINED. COORDINATE WITH ELEC CONTRACTOR. REFER TO ELECTRICAL DWGS FOR PANEL LOCATIONS.
4. TC CONTRACTOR SHALL PROVIDE 24V TRANSFORMERS REQUIRED FOR DDC CONTROLLERS AND OTHER CONTROLLERS AS REQUIRED. TRANSFORMERS SHALL BE LOCATED WITHIN EQUIPMENT ENCLOSURES OR OTHER TC PROVIDED ENCLOSURES TO BE LOCATED IN MECHANICAL OR ELECTRICAL ROOMS – COORDINATE LOCATIONS. MAXIMUM TRANSFORMER SIZE SHALL BE 100V.
5. BUILDING BAS NETWORK SUPERVISORY CONTROLLER SHALL BE CONNECTED TO THE SCHOOL DISTRICT ETHERNET. TC CONTRACTOR SHALL FURNISH AND INSTALL WIRING FOR DATA OUTLET FROM A BUILDING IT NETWORK RACK LOCATION. COORDINATE DATA OUTLET LOCATION, WIRING REQUIREMENTS, CONNECTION AND I/P ADDRESS WITH OWNER'S INFORMATION TECHNOLOGY PERSONNEL.
6. AUXILIARY PANEL FOR GAUGES, TRANSMITTERS, RELAYS, POWER TRANSFORMERS, ETC.
7. SCOPE OF WORK SHALL INCLUDE:
   - 7.1. INTEGRATION (DATABASE MIGRATION AND GRAPHICS DEVELOPMENT) FOR THE EXISTING DDC CONTROLLED HVAC SYSTEMS (THAT REMAIN) TO THE JCI FX-60 AND EXISTING REMOTE BUILDING AUTOMATION SYSTEM AX SUPERVISOR SERVER.
   - 7.2. INTEGRATION (DATABASE MIGRATION AND GRAPHICS DEVELOPMENT) FOR THE NEW WORK PROVIDED UNDER THIS PROJECT'S DDC CONTROLLED HVAC SYSTEMS TO THE JCI FX-60 AND EXISTING REMOTE BUILDING AUTOMATION SYSTEM AX SUPERVISOR SERVER.

WA
WAKELY ASSOCIATES, INC.
ARCHITECTS & ENGINEERS
30500 VAN DYKE AVE.
SUITE M-7
WARREN, MICHIGAN, 48093
TEL: 586-573-4100
FAX: 586-573-0822
E-MAIL: WA@WAKELYAIA.COM

Peter Basso Associates Inc
CONSULTING ENGINEERS
5145 Livernois, Suite 100
Troy, Michigan 48098-3276
Tel: 248-679-5668
Fax: 248-879-0007
www.PeterBassoAssoc.sites.com
PBA Project No.: 2015-0144

FARMINGTON PUBLIC SCHOOLS - 2015 BOND
2018 PROJECTS
KENBROOK & BEECHVIEW ELEMENTARY SCHOOLS

BEECHVIEW ELEMENTARY SCHOOL

TEMPERATURE CONTROL STANDARDS AND GENERAL NOTES

PRELIMINARY	☐
DESIGN DEVELOPMENT	☐
CONSTRUCTION	■
FINAL RECORD	☐

DRAWN BY: JRM
CHECKED BY: SVM

REVISIONS:

DATE: 12-15-17

SHEET NO.:

M8.1BV

JOB NO.: 171712A

g:\2015\2015-0144-00\Cad\beechview es\2015-0144-BV-M8-CT.dwg, M8.1BV, 12/12/2017 2:33:41 PM, Suha A. Matti, _Default.pc3 ,0.09094, Peter Basso Associates Inc.

TC GENERAL NOTES

TC GENERAL NOTES ON DRAWING M8.1LA APPLY TO THIS DRAWING.

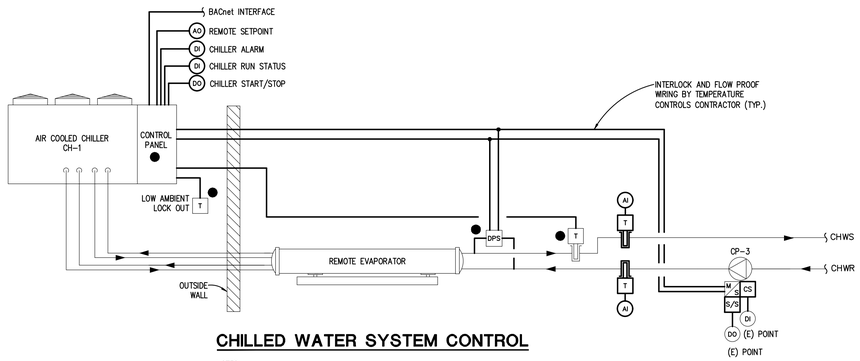

CHILLED WATER SYSTEM CONTROL

NOTES:

1. REFER TO HVAC PIPING FLOOR PLAN DRAWING M3.2D FOR REFRIGERANT MONITORING MODIFICATION REQUIREMENTS.

SEQUENCE OF OPERATION

CHILLED WATER SYSTEM:

1. ALL SETPOINTS, RESET SETPOINTS, DELAYS, TIME INTERVALS, AND DEADBANDS DESCRIBED IN SEQUENCE SHALL BE ADJUSTABLE BY SYSTEM OPERATORS. APPROPRIATE DEADBANDS SHALL BE USED TO PREVENT SHORT CYCLING SITUATIONS. ALL FAN AND PUMP MOTOR CONTROL SWITCHES SHALL BE IN "AUTO" POSITION.
2. CHILLER PACKAGED CONTROLS SHALL BE SET FOR REMOTE ENABLE FUNCTION BY OPERATORS.
3. CHILLED WATER SYSTEM OPERATION SHALL BE ENABLED BY DDC SYSTEM AUTOMATICALLY WHEN OA ENTHALPY IS GREATER THAN 23 BTU/LB AND THERE IS A DEMAND FOR CHW PRODUCTION. DDC SHALL DISABLE CH-1 WHEN OA ENTHALPY IS LESS THAN 21 BTU/LB.
4. THE CHW CIRCULATING PUMPS CP-1 & CP-2 SHALL HAVE START/STOP CAPABILITY FROM THE DDC SYSTEM. ONE OF THE TWO PUMPS SHALL BE ACTIVATED BY DDC WHEN SYSTEM IS ENABLED. THE OTHER WILL SERVE AS STANDBY.
5. DDC SHALL ALTERNATE PUMP OPERATION BASED ON RUNTIME HOURS OR AT THE BEGINNING OF EACH MONTH – OPERATOR SELECTABLE. ALTERNATION SHALL OCCUR AT BEGINNING OF NEXT CHILLER START CYCLE.
6. DDC SHALL MONITOR OPERATING STATUS OF EACH PUMP VIA CURRENT SWITCHES. UPON PUMP FAILURE, DDC SHALL ACTIVATE FAILURE ALARM AND AUTOMATICALLY START THE STANDBY PUMP. DDC SHALL TOTALIZE EACH PUMP'S RUN TIME HOURS OF OPERATION.
7. WHEN CHW FLOW IS PROVEN BY DIFFERENTIAL PRESSURE SWITCH WIRED IN SERIES WITH PARALLELED PUMP AUXILIARY CONTACTS, CHILLER INTERLOCKS ARE COMPLETE AND THE CHILLER PACKAGED CONTROL PANEL WITH INTEGRAL TEMPERATURE SENSOR SHALL SEQUENCE CHILLER OPERATION TO MAINTAIN THE CHILLER'S CHW SUPPLY SETPOINT OF 42°F (ADJUSTABLE AT CHILLER PANEL OR FROM REMOTE SETPOINT ADJUSTMENT THRU DDC).
8. DDC SHALL MONITOR OTHER CHILLER POINTS VIA BACNET INTERFACE. ALLOW FOR TEN ADDITIONAL POINTS OF INFORMATION AT THE BAS GRAPHIC.
9. DDC SHALL KEEP PUMP CP-3 ACTIVATED FOR 5 MINUTES AFTER CHILLER SHUTDOWN CYCLE IS ACTIVATED.
10. REFRIGERANT MONITOR SHALL LOCKOUT CHILLER OPERATION WHEN A REFRIGERANT LEAK IS DETECTED.
11. DDC SHALL PREVENT SHORT CYCLING OF CHILLER WITH A 20 MINUTE INTERVAL BETWEEN CHILLER SHUTDOWN AND CHILLER RESTART.

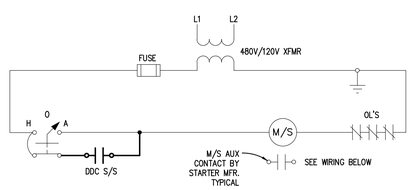

CHW PUMPS CP-1 & 2 M/S WIRING

TYPICAL

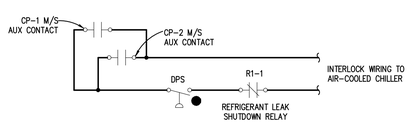

CH-1 INTERLOCK WIRING

CAUTION

DO NOT ENTER WHEN THIS ALARM IS FLASHING. IT COULD INDICATE A REFRIGERANT RELEASE IN THIS ROOM. PLEASE CALL SCHOOL DISTRICT REPRESENTATIVES AND REPORT THIS ALARM IMMEDIATELY.

(E)REFRIGERANT LEAK SIGN DETAIL

NO SCALE

NOTES:

1. PROVIDE SIGN WITH WHITE LETTERING ON RED BACKGROUND, POLYVINYL PLASTIC, 11" WIDE X 8-1/2" HIGH. ENGRAVED LETTERS SHALL BE MINIMUM 1/2" LETTER HEIGHT. SECURE TO WALL OR DOOR APPROPRIATELY.
2. ONE SIGN REQUIRED AT EACH DOOR INTO/OUT OF THE MECHANICAL ROOM A141. REFER TO DWGS FOR LOCATIONS.

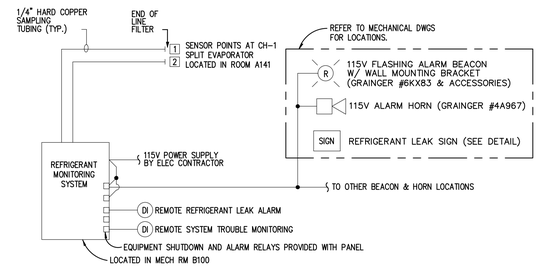

(E)REFRIGERANT MONITORING SYSTEM

NO SCALE

GENERAL NOTES:

1. TC CONTRACTOR SHALL PROVIDE MODIFICATIONS TO EXISTING REFRIGERANT MONITORING SYSTEM FOR REFRIGERANT TYPE AS SPECIFIED AND INSTALL PER MANUFACTURER'S RECOMMENDATIONS.
2. REUSE (E) BEACONS AND HORNS.
3. RECONNECT (E)PANEL INTERFACE AND WIRING TO CHW SYSTEM AND DDC PANEL.
4. REUSE (E)DEDICATED 115V POWER SUPPLY TO REFRIGERANT MONITORING PANEL.

SEQUENCE OF OPERATION:

1. REFER TO 15970 REFRIGERANT MONITORING SPECIFICATION FOR DETAILS.
2. REUSE (E)REFRIGERANT MONITORING SYSTEM TROUBLE STATUS THAT SHALL BE MONITORED BY DDC SYSTEM.
3. REUSE (E)REFRIGERANT MONITORING SYSTEM ALARM THAT SHALL BE MONITORED BY DDC SYSTEM.
4. REUSE (E) REFRIGERANT MONITORING SYSTEM CONTROL ALOGORITHM FOR MECH ROOM VENTILATION.

WAKELY ASSOCIATES, INC.
ARCHITECTS & ENGINEERS

30500 VAN DYKE AVE.
SUITE M-7
WARREN, MICHIGAN, 48093

TEL. 586-573-4100
FAX. 586-573-0822
E-MAIL: WA@WAKELYAIA.COM

Peter Basso Associates Inc
CONSULTING ENGINEERS
5145 Livernois, Suite 100
Troy, Michigan 48098-3276
Tel: 248-879-5668
Fax: 248-879-0007
www.PeterBassoAssociates.com
PBA Project No.: 2015-0144

FARMINGTON PUBLIC SCHOOLS - 2015 BOND
2018 PROJECTS
KENBROOK & BEECHVIEW ELEMENTARY SCHOOLS

BEECHVIEW ELEMENTARY SCHOOL

TEMPERATURE CONTROLS

PRELIMINARY ☐
DESIGN DEVELOPMENT ☐
CONSTRUCTION ■
FINAL RECORD ☐

DRAWN BY: JRM
CHECKED BY: SVM

REVISIONS:

DATE: 12-15-17

SHEET NO.: M8.2BV

JOB NO.: 171712A

g:\2015\2015-0144-00\Cad\beechview es\2015-0144-BV-M8-CT.dwg, M8.2BV, 12/12/2017 2:33:42 PM, Suha A. Matti, _Default.pc3 ,0.09094, Peter Basso Associates Inc.

TC GENERAL NOTES

TC GENERAL NOTES ON DRAWING M8.1LA APPLY TO THIS DRAWING.

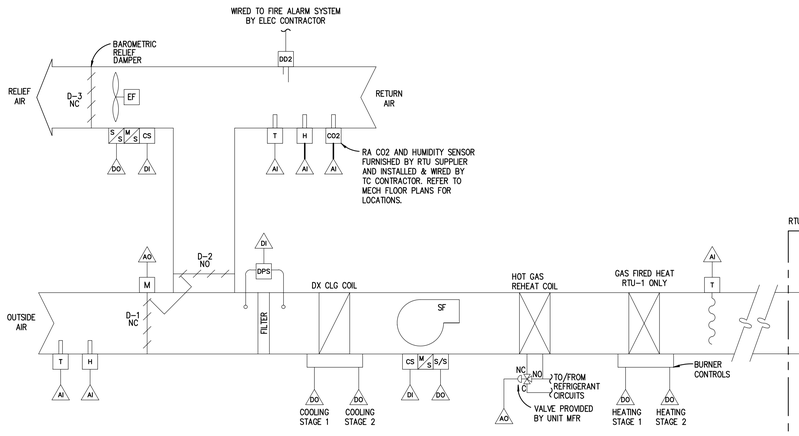

ROOF TOP UNIT RTU-1 CONTROL

RTU-1 SERVES ADMIN OFFICE

NOTES:

1. ELECTRICAL CONTRACTOR SHALL PROVIDE FIRE ALARM SYSTEM COMPONENTS AND WIRING FROM FIRE ALARM PANEL TO CONTROL MODULE. TC CONTRACTOR SHALL PROVIDE WIRING FROM CONTROL MODULE TO MOTOR STARTER CONTROL CIRCUIT.
2. RTU TO BE PROVIDED WITH PACKAGED CONTROLS AND BACNET COMPATIBLE CARD.

RTU-1 SEQUENCE OF OPERATION

ROOFTOP UNIT CONTROL:

1. MANUFACTURER'S RTU DDC CONTROLLER AND CONTROL SEQUENCE OF OPERATION (HEREIN CALLED RTU) MAY VARY SLIGHTLY FROM THE RECOMMENDED SEQUENCE SHOWN BELOW. MANUFACTURER'S REPRESENTATIVE SHALL DOCUMENT THESE VARIATIONS IN THE SUBMITTAL PACKAGE.

SEQUENCE OF OPERATION:

1. ALL SETPOINTS, RESET SETPOINTS, DELAYS, TIME INTERVALS, AND DEADBANDS DESCRIBED IN SEQUENCE SHALL BE ADJUSTABLE BY SYSTEM OPERATORS. APPROPRIATE DEADBANDS SHALL BE USED TO PREVENT SHORT CYCLING SITUATIONS. ALL FAN AND PUMP MOTOR CONTROL SWITCHES SHALL BE IN "AUTO" POSITION.
2. SUPPLY FAN AND EXHAUST FAN SHALL HAVE START/STOP CAPABILITY FROM THE BAS THRU THE RTU CONTROLLER. RTU CONTROLLER SHALL MAINTAIN BAS TIME-SCHEDULED OCCUPIED MODE (COMPENSATED BY OPTIMUM START PROGRAM), TEMPORARY OCCUPIED MODE (SET FOR 1-HR. ENABLED FROM OVERRIDE SWITCH ON TEMPERATURE SENSOR), AND UNOCCUPIED CYCLE MODE FROM HEATING/COOLING SETPOINTS AS DOWNLOADED FROM THE BAS.
3. SUPPLY FAN AND EXHAUST FAN STATUS SHALL BE MONITORED BY DDC THRU RESPECTIVE CURRENT SWITCHES. ABNORMAL STATUS CONDITION SHALL ACTIVATE ALARM. RTU SHALL TOTALIZE RUN TIME HOURS OF OPERATION FOR BOTH FANS.
4. RTU CONTROLLER SHALL CONTROL THE DISCHARGE AIR TEMPERATURE SETPOINT. DUCT-MOUNTED HEATING COILS SHALL CONTROL THESPACE TEMPERATURE SETPOINT. OUTSIDE AND RETURN AIR DAMPERS SHALL BE ALLOWED TO MODULATE AS DESCRIBED. IN OPTIMUM START MODE, RTU SHALL MAINTAIN 72°F DAT SETPOINT AND IN COOLING MODE 55°F DAT SETPOINT UNTIL SPACE TEMPERATURE SETPOINT (FROM BACNET) OR OCCUPIED MODE IS REACHED.
5. IN HEATING MODE, RTU SHALL DEACTIVATE DX COOLING AND HOT-GAS REHEAT CONTROL, MODULATE DAMPERS TO THE MINIMUM OA POSITION, AND MAINTAIN DAT SETPOINT WITH ECONOMIZER CONTROL. SEE DEHUMIDIFICATION CONTROL HEREIN.
6. IN COOLING MODE, RTU SHALL COMPARE OA ENTHALPY WITH RA ENTHALPY TO PERFORM ECONOMIZER OPERATION. WHEN OA ENTHALPY IS LESS THAN RA ENTHALPY AND OA HUMIDITY IS LESS THAN 60% RH, RTU CONTROLLER SHALL MODULATE DAMPERS MORE OPEN TO OUTSIDE AIR AS 1ST STAGE OF COOLING TO MAINTAIN DAT SETPOINT. WHEN OA DAMPERS ARE FULLY OPEN AND DAT IS STILL ABOVE SETPOINT, RTU SHALL STAGE DX COOLING CONTROL TO MAINTAIN DAT SETPOINT. HOT-GAS REHEAT CONTROL SHALL REMAIN OFF. SEE DEHUMIDIFICATION CONTROL HEREIN.
7. IN COOLING MODE, RTU SHALL COMPARE OA ENTHALPY WITH RA ENTHALPY TO PERFORM ECONOMIZER OPERATION. WHEN OA ENTHALPY IS GREATER THAN RA ENTHALPY OR OA HUMIDITY IS GREATER THAN 60% RH, RTU CONTROLLER SHALL MODULATE DAMPERS TO MINIMUM OA POSITION AND STAGE DX COOLING TO MAINTAIN DAT SETPOINT. HOT-GAS REHEAT CONTROL MAY BE USED TO MAINTAIN DAT SETPOINT. SEE DEHUMIDIFICATION CONTROL HEREIN.
8. DEHUMIDIFICATION CONTROL: DURING OCCUPIED MODE, RTU SHALL MONITOR RETURN AIR HUMIDITY. WHEN RETURN AIR HUMIDITY RISES ABOVE 55% RH SETPOINT, RTU SHALL STAGE DX COOLING CONTROL ON (IF NOT ALREADY ACTIVATED) TO DEHUMIDIFY THE AIR AND MODULATE HOT-GAS REHEAT COIL VALVE TO REHEAT THE DEHUMIDIFIED AIR TO MAINTAIN COIL LEAVING TEMPERATURE SETPOINT OF 54°F. IF THE HOT-GAS REHEAT COIL CANNOT MAINTAIN DAT SETPOINT AFTER A 5 MINUTE DELAY, RTU SHALL STAGE GAS-FIRED HEATING CONTROLS TO MAINTAIN DAT SETPOINT. RTU SHALL DEHUMIDIFY THE SPACE UNTIL RA HUMIDITY IS LESS THAN 51% RH SETPOINT.
9. RTU ECONOMIZER CONTROL SHALL ACTIVATE AND MODULATE THE POWERED EXHAUST FAN THRU FAN ECM AS REQUIRED BASED ON SPACE STATIC PRESSURE SETPOINT (DETERMINED BY TAB CONTRACTOR) TO MAINTAIN SPACE SLIGHTLY POSITIVE. WHEN RTU IS DEACTIVATED OR OPERATING IN UNOCCUPIED CYCLE MODE OR MORNING WARM-UP MODE, OA DAMPER SHALL REMAIN CLOSED AND EXHAUST FAN SHALL REMAIN OFF.
10. DISCHARGE AIR TEMP SETPOINT SHALL BE BASED ON THE FOLLOWING OUTDOOR AIR TEMP RESET SCHEDULE:

OAT	DAT
≤ 30°F	60°F
≥ 55°F	55°F

11. DUCT SMOKE DETECTOR(S) SHALL DEACTIVATE RTU (SF) WHEN PRODUCTS OF COMBUSTION ARE DETECTED.
12. FILTER STATUS SHALL BE MONITORED BY RTU THRU DIFFERENTIAL PRESSURE SWITCH. MANUFACTURER SHALL SET DPS SETPOINT BASED ON FILTER MANUFACTURER'S LOADED DATA.
13. WHEN RTU IS DEACTIVATED, SF/EF SHALL SHUT DOWN, OA DAMPER SHALL CLOSE, AND DX COOLING, HOT-GAS REHEAT, AND GAS-FIRED HEATING CONTROLS SHALL REMAIN OFF.
14. FOR UNOCCUPIED NIGHT CYCLE CONTROL, RTU SHALL CYCLE BASED ON SPACE TEMPERATURE. RTU ENERGIZES SF ONLY (EXHAUST FAN REMAINS OFF), MIXED AIR DAMPERS REMAIN CLOSED TO OUTSIDE AIR, GAS-FIRED HEATING ONLY SHALL CONTROL. RTU SHALL PROVIDE 2°F DEADBAND FOR UNOCCUPIED SPACE TEMP SETPOINT CONTROL.
15. BAS SHALL BE CAPABLE OF ADDITIONAL RTU MONITORING VIA BACNET OPEN PROTOCOL COMMUNICATION LINK AS INDICATED ON DETAIL.

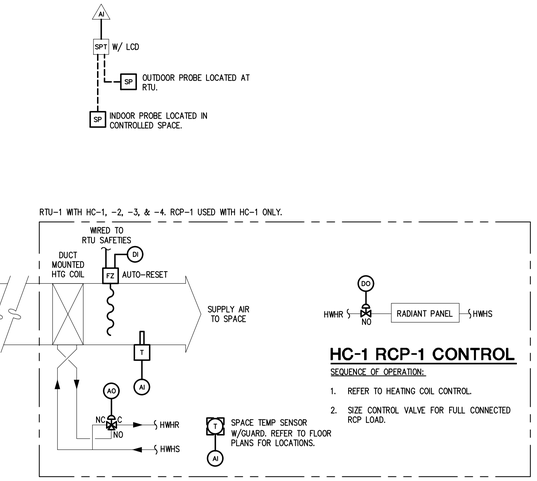

HC-1 RCP-1 CONTROL

SEQUENCE OF OPERATION:

1. REFER TO HEATING COIL CONTROL.
2. SIZE CONTROL VALVE FOR FULL CONNECTED RCP LOAD.

HEATING COIL CONTROL SEQUENCE OF OPERATION

1. ALL SETPOINTS, RESET SETPOINTS, DELAYS, TIME INTERVALS, AND DEADBANDS DESCRIBED IN SEQUENCE SHALL BE ADJUSTABLE BY SYSTEM OPERATORS. APPROPRIATE DEADBANDS SHALL BE USED TO PREVENT SHORT CYCLING SITUATIONS.
2. DDC SHALL HAVE OCCUPIED/UNOCCUPIED CONTROL CAPABILITY FOR EACH DUCT-MOUNTED HEATING COIL AS SCHEDULED AND COMMANDED THRU THE BAS.
3. HC-1 ONLY: IN OCCUPIED MODE, DDC SHALL OPEN/CLOSE RADIANT CEILING PANEL VALVE TO MAINTAIN SPACE TEMP SETPOINT AS 1ST STAGE OF HEAT. WHEN RCP-1 CANNOT MAINTAIN SETPOINT, THEN DDC SHALL MODULATE THE DUCT-MOUNTED HEATING COIL VALVE TO MAINTAIN SPACE TEMP SETPOINT. DDC SHALL PROVIDE HIGH LIMIT CONTROL OF DUCT-MOUNTED HEATING COIL DISCHARGE AIR TEMP SENSOR AT 90°F SETPOINT. IN UNOCCUPIED MODE, DDC SHALL OPEN/CLOSE RADIANT CEILING PANEL VALVE TO MAINTAIN HEATING UNOCCUPIED SETPOINT.
4. HC-2, 3, & 4: DDC SHALL MODULATE THE DUCT-MOUNTED HEATING COIL VALVE TO MAINTAIN SPACE TEMP SETPOINT. DDC SHALL PROVIDE HIGH LIMIT CONTROL OF DUCT-MOUNTED HEATING COIL DISCHARGE AIR TEMP SENSOR AT 90°F SETPOINT.
5. SPACE TEMPERATURE SETPOINTS SHALL BE AS FOLLOWS:

   HEATING UNOCCUPIED SETPOINT = 62°F

   HEATING OCCUPIED SETPOINT = 70°F

   COOLING OCCUPIED SETPOINT = 75°F

   COOLING UNOCCUPIED SETPOINT = N/A
6. FREEZESTAT(S) LCOATED AFTER DUCT-MOUNTED HEATING COILS SHALL DEACTIVATE SUPPLY FAN WHEN TEMPERATURE IS 35°F OR BELOW. DDC SHALL MONITOR FREEZESTAT STATUS AND ACTIVATE ALARM IF CONDITION OCCURS.
7. WHEN THE ASSOCIATED RTU IS OFF (AS POLLED THROUGH BACNET), DDC SHALL MODULATE THE HEATING COIL VALVE TO MAINTAIN 50°F AT DUCT TEMP SENSOR.

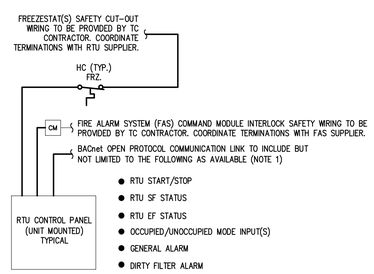

- RTU START/STOP
- RTU SF STATUS
- RTU EF STATUS
- OCCUPIED/UNOCCUPIED MODE INPUT(S)
- GENERAL ALARM
- DIRTY FILTER ALARM
- DISCHARGE AIR LOW-LIMIT ALARM
- SAFETY CUT-OUT ALARM
- OCCUPIED MODE DAT SETPOINT
- UNOCCUPIED MODE ZONE HEATING SETPOINT
- UNOCCUPIED MODE ZONE COOLING SETPOINT
- OUTDOOR AIR TEMPERATURE/HUMIDITY
- RETURN AIR TEMPERATURE/HUMIDITY
- SUPPLY AIR TEMPERATURE
- SPACE TEMP (WRITE POINT FROM BAS)
- OUTDOOR AIR DAMPER MINIMUM SETPOINT
- MIXED AIR DAMPER POSITION
- COOLING MODE STATUS
- COOLING MODE OUTPUT
- ECONOMIZER STATUS
- DEHUMIDIFICATION MODE STATUS
- HOT-GAS REHEAT CONTROL PERCENTAGE
- ECONOMIZER STATUS

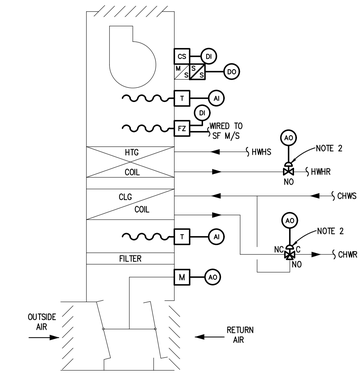

NEW CONSOLE UNIT VENTILATOR CONTROL

TYPICAL

NOTE:

1. REFER TO FLOOR PLANS FOR UNIT AND SPACE TEMP SENSOR LOCATIONS.
2. CONTROL VALVE MANUFACTURER/MODEL SHALL BE SCHNEIDER ELECTRIC (FORMERLY ERIE) / VM SERIES POPTOP ZONE VALVES WITH AP23A000 MODEL ACTUATOR WITH APPROPRIATE CONTROL SIGNAL TO INTERFACE WITH NEW DDC CONTROLLER.
3. UNITS ARE FLOOR MOUNTED OR CEILING RECESSED, REFER TO MECHANICAL SCHEDULES AND EQUIPMENT SUBMITTALS.

SEQUENCE OF OPERATION

CONSOLE UNIT VENTILATOR (HUV) TYPICAL:

1. ALL SETPOINTS INCLUDING RESET SCHEDULE SETPOINTS, DELAYS, TIME INTERVALS, AND DEADBANDS DESCRIBED IN SEQUENCE SHALL BE ADJUSTABLE BY SYSTEM OPERATORS. APPROPRIATE DEADBANDS SHALL BE USED TO PREVENT SHORT CYCLING SITUATIONS. ALL MOTOR CONTROL SWITCHES SHALL BE IN "AUTO" POSITION
2. SUPPLY FAN SHALL HAVE START/STOP CAPABILITY FROM THE DDC SYSTEM. UNIT SHALL OPERATE BASED ON TIME SCHEDULED OCCUPIED MODE AND SETPOINTS FROM BAS, TEMPORARY OCCUPIED MODE (SET FOR 1-HR. ENABLED FROM OVERRIDE SWITCH ON TEMPERATURE SENSOR), AND UNOCCUPIED CYCLE MODE.
3. UNITS MAY USE ECM OR PSC MOTORS, REFER TO EQUIPMENT SUBMITTALS FOR DETAILS.
4. FOR HEATING OCCUPIED MODE, UV SHALL BE CONTROLLED TO MAINTAIN SPACE TEMP SETPOINT OF 70°F.
5. FOR COOLING OCCUPIED MODE, UV SHALL BE CONTROLLED TO MAINTAIN SPACE TEMP SETPOINT OF 75°F.
6. FOR HEATING UNOCCUPIED MODE, UV SHALL CYCLE ON & OFF TO MAINTAIN A SETBACK SPACE TEMP SETPOINT OF 62°F.
7. FOR COOLING UNOCCUPIED MODE, UV SHALL REMAIN OFF.
8. SUPPLY FAN STATUS SHALL BE MONITORED BY DDC THRU CURRENT SWITCH. ABNORMAL STATUS CONDITION FOR SF SHALL ACTIVATE ALARM. DDC SHALL TOTALIZE FAN RUNTIME HOURS OF OPERATION.
9. WHEN UV IS ACTIVATED DURING OCCUPIED MODE, MIXED AIR DAMPER SHALL BE ALLOWED TO MODULATE AS DESCRIBED. WHEN UV IS DEACTIVATED OR OPERATING IN UNOCCUPIED CYCLE MODE OR MORNING WARM-UP MODE, MIXED AIR DAMPER SHALL REMAIN CLOSED (OUTSIDE AIR DAMPER FULLY CLOSED AND RETURN AIR DAMPER FULLY OPEN).
10. DDC SHALL PROVIDE MIXED AIR TEMP LOW LIMIT OVERRIDE CONTROL SETPOINT OF 45°F. DDC SHALL MODULATE MIXED AIR DAMPERS BELOW THE MINIMUM OA DAMPER POSITION TO MAINTAIN SETPOINT.
11. WHEN SPACE TEMP IS BELOW HEATING SETPOINT, DDC SHALL MODULATE OUTSIDE & RETURN AIR DAMPERS TOWARDS MINIMUM OA POSITION, THEN MODULATE HUV HEATING COIL CONTROL VALVE TO MAINTAIN DISCHARGE AIR TEMPERATURE SETPOINT THAT SHALL BE RESET BASED ON DEVIATION FROM SPACE TEMP SETPOINT. HEATING MODE DISCHARGE AIR TEMP SETPOINT RANGE SHALL BE 65°F SETPOINT TO 85°F SETPOINT.
12. WHEN SPACE TEMP IS ABOVE COOLING SETPOINT AND OA TEMP IS LESS THAN SPACE TEMP AND OA HUMIDITY IS LESS THAN 60% RH SETPOINT, DDC SHALL MODULATE DAMPER OA ECONOMIZER IN SEQUENCE WITH HUV COOLING COIL CONTROL VALVE TO MAINTAIN SPACE TEMP SETPOINT.
13. WHEN SPACE TEMP IS ABOVE COOLING SETPOINT AND OA TEMP IS GREATER THAN SPACE TEMP OR OA HUMIDITY IS GREATER THAN 60% RH SETPOINT, DAMPERS SHALL REMAIN AT MINIMUM OA POSITION AND DDC SHALL CONTROL SHALL MODULATE HUV COOLING COIL CONTROL VALVE TO MAINTAIN SPACE TEMP SETPOINT.
14. DDC SHALL PREVENT HEATING AND COOLING SIMULTANEOUSLY.
15. FREEZESTAT SHALL DEACTIVATE SF WHEN SENSED TEMP IS 35°F OR BELOW. UPON CUT-OUT, DDC SYSTEM SHALL FULLY CLOSE OA DAMPER, FULLY OPEN HWH COIL VALVE, BAS LOW-LIMIT FREEZESTAT ALARM SHALL BE ACTIVATED, AND DDC SOFTWARE LOCKOUT SHALL HOLD UNIT OFF UNTIL IT IS RESET BY OPERATOR FROM GRAPHICAL INTERFACE FOR UNIT.
16. WHEN UV IS DEACTIVATED, SF TURNS OFF, MIXED AIR DAMPER CLOSES TO OUTSIDE AIR, AND HUV CHW COOLING COIL VALVE CLOSES TO THE COIL. DDC SHALL CYCLE HUV ON/OFF TO MAINTAIN UNOCCUPIED HEATING SETPOINT. WHEN HUV IS OFF, AND OA TEMP IS BELOW 45°F, DDC SHALL MODULATE HUV HWH COIL CONTROL VALVE BASED ON DISCHARGE AIR TEMP TO MAINTAIN LOW LIMIT PLENUM TEMP SETPOINT OF 50°F. DDC SHALL PROVIDE 2°F DEADBAND FOR UNOCCUPIED HEATING SETPOINT CONTROL.

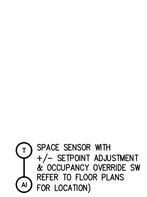

NOTES:

1. REFER TO MECHANICAL FLOOR PLANS FOR EXISTING CNV QUANTITIES AND LOCATIONS TO BE CONTROLLED WITH NEW VUV.
2. USE 1/2", 2-POSITION, 2W VALVE W/ACTUATOR COMPATIBLE WITH DDC CONTROLLER.
3. CONTROL VALVE MANUFACTURER/MODEL SHALL BE SCHNEIDER ELECTRIC (FORMERLY ERIE) / VM SERIES POPTOP ZONE VALVE.

WAKELY ASSOCIATES, INC.
ARCHITECTS & ENGINEERS

30500 VAN DYKE AVE.
SUITE M-7
WARREN, MICHIGAN, 48093

TEL: 586-573-4100
FAX: 586-573-0822
E-MAIL: WA@WAKELYAIA.COM

Peter Basso Associates Inc
CONSULTING ENGINEERS
5145 Livernois, Suite 100
Troy, Michigan 48098-3276
Tel: 248-879-5668
Fax: 248-879-0007
www.PeterBassoAssociates.com
PBA Project No.: 2015-0144

FARMINGTON PUBLIC SCHOOLS - 2015 BOND
2018 PROJECTS
KENBROOK & BEECHVIEW ELEMENTARY SCHOOLS

BEECHVIEW ELEMENTARY SCHOOL

TEMPERATURE CONTROLS

PRELIMINARY ☐
DESIGN DEVELOPMENT ☐
CONSTRUCTION ■
FINAL RECORD ☐

DRAWN BY: JRM
CHECKED BY: SVM

REVISIONS:

DATE: 12-15-17

SHEET NO.: M8.3BV

JOB NO.: 171712A

g:\2015\2015-0144-00\Cad\beechview es\2015-0144-BV-M8-CT.dwg, M8.3BV, 12/12/2017 2:33:43 PM, Suha A. Matti, _Default.pc3 ,0.09094, Peter Basso Associates Inc.

TC GENERAL NOTES

TC GENERAL NOTES ON DRAWING M8.1LA APPLY TO THIS DRAWING.

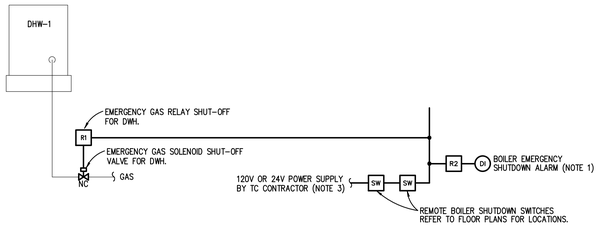

EMERGENCY SWITCH SHUTDOWN WIRING

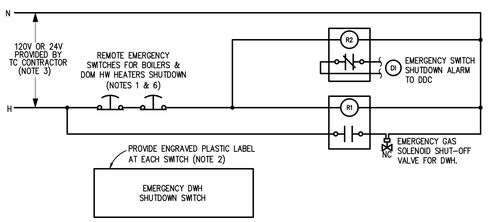

EMERGENCY SWITCH SHUTDOWN WIRING

NOTES:

1. LOCATE SWITCH AT EACH ENTRANCE OUTSIDE OF ROOM IF POSSIBLE; OTHERWSE, LOCATE JUST INSIDE ENTRANCE. (INSIDE FOR EXTERIOR WALLS). REFER TO FLOOR PLANS FOR ENTRY LOCATIONS AND FIELD VERIFY INSTALLATION REQUIREMENTS.
2. TC CONTRACTOR SHALL PROVIDE SIGN (NAME PLATE) TO BE PLACED DIRECTLY ABOVE OR BELOW EACH PUSHBUTTON SWITCH THAT READS: "EMERGENCY DOMESTIC HW SYSTEM SHUTDOWN". COORDINATE LOCATION WITH ALL OTHER TRADES.
3. TC CONTRACTOR SHALL PROVIDE POWER TO CONTROL RELAYS AND GAS SOLENOID VALVE. REFER TO ELECTRICAL PANEL SCHEDULES AND COORDINATE WITH ELECTRICAL CONTRACTOR AS NECESSARY.
4. TC CONTRACTOR SHALL MOUNT SHUTDOWN CONTROL RELAYS IN AN AUXILIARY CONTROL PANEL.
5. TC CONTRACTOR SHALL PROVIDE MUSHROOM PUSHBUTTON SWITCH (PUSH TO LATCH – PULL TO RELEASE) WITH, FLIP-UP PLASTIC GUARD, AND NORMALLY CLOSED (NC) CONTACTS. PROVIDE WITH PROPER ENCLOSURE.

SEQUENCE OF OPERATION:

1. UNDER NORMAL OPERATING CONDITIONS THE CIRCUIT SHALL BE ENERGIZED AND THE CUT-OUT RELAYS' NORMALLY OPEN (NO) CONTACTS SHALL BE CLOSED TO OPEN THE DOMESTIC HW SYSTEM'S GAS SOLENOID VALVE. WHEN A SWITCH IS PUSHED (LATCHED) THE CUT-OUT RELAY CONTACTS SHALL CLOSE THE DOMESTIC HW SYSTEM SOLENOID VALVE. THE SWITCH MUST BE MANUALLY RELEASED TO ALLOW NORMAL OPERATION.
2. DDC SHALL ACTIVATE EMERGENCY SHUTDOWN ALARM IN DDC SYSTEM WHEN A REMOTE SWITCH HAS BEEN PUSHED.

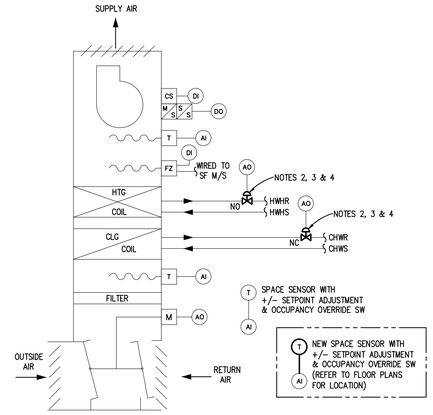

EXISTING CONSOLE UNIT VENTILATOR CONTROL CONTROL VALVE REPLACEMENTS & MISC

TYPICAL

NOTE:

1. REFER TO FLOOR PLANS FOR QUANTITY OF EXISTING UNITS AND LOCATIONS.
2. TEMPERATURE CONTROLS WORK SCOPE AT EXISTING UNIT VENTILATORS IS TO REPLACE THE EXISTING 2-WAY HOT WATER HEATING AND 2-WAY CHILLED WATER CONTROL VALVES AND ACTUATORS. EXISTING UNIT VENTILATOR CONTROLLER AND PROGRAMMING SEQUENCE TO REMAIN (COMPONENTS/POINTS INDICATED IN DETAIL MAY NOT REPRESENT ACTUAL EXISTING CONTROL).
3. TC CONTRACTOR SHALL FIELD VERIFY EXISTING CONTROL VALVE PIPING CONFIGURATION AND SELECT CONTROL VALVES BASED ON EXISTING Cv VALUES OR BASED ON FLOW READINGS TAKEN BY TAB CONTRACTOR PRIOR TO PROJECT DEMOLITION REQUIREMENTS.
4. CONTROL VALVE MANUFACTURER/MODEL SHALL BE SCHNEIDER ELECTRIC (FORMERLY ERIE) / VM SERIES POPTOP ZONE VALVES WITH AP23A000 MODEL ACTUATOR WITH APPROPRIATE CONTROL SIGNAL TO INTERFACE WITH EXISTING DDC CONTROLLER.

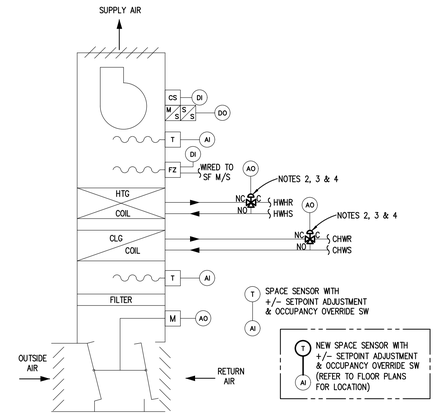

EXISTING CONSOLE UNIT VENTILATOR CONTROL CONTROL VALVE REPLACEMENTS & MISC

TYPICAL

NOTE:

1. REFER TO FLOOR PLANS FOR QUANTITY OF EXISTING UNITS AND LOCATIONS.
2. TEMPERATURE CONTROLS WORK SCOPE AT EXISTING UNIT VENTILATORS IS TO REPLACE THE EXISTING 3-WAY HOT WATER HEATING AND 3-WAY CHILLED WATER CONTROL VALVES AND ACTUATORS. EXISTING UNIT VENTILATOR CONTROLLER AND PROGRAMMING SEQUENCE TO REMAIN (COMPONENTS/POINTS INDICATED IN DETAIL MAY NOT REPRESENT ACTUAL EXISTING CONTROL).
3. TC CONTRACTOR SHALL FIELD VERIFY EXISTING CONTROL VALVE PIPING CONFIGURATION AND SELECT CONTROL VALVES BASED ON EXISTING Cv VALUES OR BASED ON FLOW READINGS TAKEN BY TAB CONTRACTOR PRIOR TO PROJECT DEMOLITION REQUIREMENTS.
4. CONTROL VALVE MANUFACTURER/MODEL SHALL BE SCHNEIDER ELECTRIC (FORMERLY ERIE) / VM SERIES POPTOP ZONE VALVES WITH AP23A000 MODEL ACTUATOR WITH APPROPRIATE CONTROL SIGNAL TO INTERFACE WITH EXISTING DDC CONTROLLER.

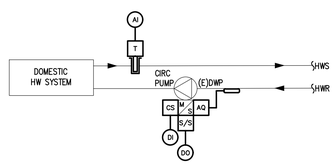

DOM HW SYSTEM MONITORING & CONTROL

SEQUENCE OF OPERATION:

1. AQUASTAT WILL START (E)DHW PUMP WHEN WATER TEMPERATURE FALLS BELOW SETPOINT. AQUASTAT SHALL PROVIDE 4°F DEADBAND FOR CONTROL.
2. DDC SHALL ACTIVATE DOMESTIC HW CIRC PUMP BASED ON BAS TIME OF DAY SCHEDULE FOR THE BUILDING. PROVIDE A VACATION MODE SCHEDULE FROM BAS FOR SUMMER RECESS TO DEACTIVATE THE PUMP.
3. DDC SHALL MONITOR THE PUMP CURRENT SWITCH AND TOTALIZE RUN TIME HOURS OF OPERATION. DDC SHALL MONITOR DOMESTIC HW SYSTEM SUPPLY TEMP FOR BAS DISPLAY.

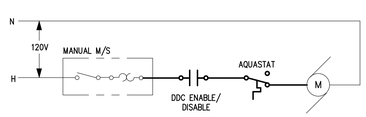

DOMESTIC HW CP M/S WIRING

TYPICAL.

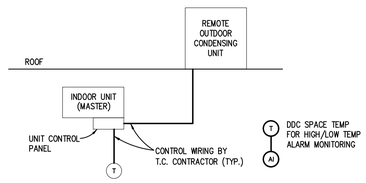

PACKAGED ACU FIELD WIRING & CONTROL

TYPICAL – REFER TO MECH FLOOR PLANS FOR QTY & LOCATIONS

NOTES:

1. TC CONTRACTOR SHALL PROVIDE FIELD WIRING BETWEEN INDOOR UNIT CONTROLS AND THE REMOTE CONDENSER.
2. TC CONTRACTOR SHALL INSTALL THERMOSTAT PROVIDED BY ACU SUPPLIER AND PROVIDE REQUIRED FIELD WIRING.
3. TC CONTRACTOR SHALL COORDINATE WITH MANUFACTURER FOR EXACT TERMINATIONS AND WIRING REQUIREMENTS.

SEQUENCE OF OPERATION:

1. ACU SHALL CYCLE AS REQUIRED FROM THE MFR'S THERMOSTAT WITH LOCAL TEMP SETPOINT..
2. DDC SHALL MONITOR SPACE TEMP AND ACTIVATE ALARM IF HIGH OR LOW LIMIT SETPOINTS ARE REACHED.

WAKELY ASSOCIATES, INC.
ARCHITECTS & ENGINEERS

30500 VAN DYKE AVE.
SUITE M-7
WARREN, MICHIGAN, 48093

TEL. 586-573-4100
FAX. 586-573-0822
E-MAIL: WA@WAKELYAIA.COM

Peter Basso Associates Inc
CONSULTING ENGINEERS
5145 Livernois, Suite 100
Troy, Michigan 48098-3276
Tel: 248-879-5668
Fax: 248-879-0007
www.PeterBassoAssoc.sites.com
PBA Project No.: 2015-0144

FARMINGTON PUBLIC SCHOOLS - 2015 BOND
2018 PROJECTS
KENBROOK & BEECHVIEW ELEMENTARY SCHOOLS

BEECHVIEW ELEMENTARY SCHOOL

TEMPERATURE CONTROLS

PRELIMINARY ☐
DESIGN DEVELOPMENT ☐
CONSTRUCTION ■
FINAL RECORD ☐

DRAWN BY: JRM
CHECKED BY: SVM

REVISIONS:

DATE: 12-15-17

SHEET NO.:

M8.4BV

JOB NO.: 171712A

g:\2015\2015-0144-00\Cad\beechview es\2015-0144-BV-M8-CT.dwg, M8.4BV, 12/12/2017 2:33:45 PM, Suha A. Matti, _Default.pc3 ,0.09094, Peter Basso Associates Inc.

ELECTRICAL SYMBOL LIST

(NOTE: SOME SYMBOLS AND ABBREVIATIONS SHOWN MAY NOT APPLY TO THIS PROJECT)

SYMBOL	DESCRIPTION
FX	FIXTURE TYPE
	LIGHTING FIXTURE
	DIRECT/INDIRECT LIGHTING FIXTURE
	EMERGENCY FIXTURE
FX-NL	NIGHT LIGHTING FIXTURE
	LIGHTING FIXTURE
	EMERGENCY FIXTURE
	WALL MOUNTED LIGHTING FIXTURE
	LIGHTING FIXTURE
	EMERGENCY FIXTURE
	DIRECTIONAL LIGHTING FIXTURE
	PENDANT LIGHTING FIXTURE
	WALL SCONCE
	LIGHTING TRACK
	TRACK LIGHTING FIXTURE
	POLE MOUNTED LIGHTING FIXTURE
	POLE MOUNTED LIGHTING FIXTURE – POST TOP
	BOLLARD LIGHTING FIXTURE
	EMERGENCY LIGHTING UNIT
	EXIT LIGHTING FIXTURE WITH DIRECTIONAL ARROWS (SHADED AREA INDICATES FACE)
	EXIT LIGHTING FIXTURE WITH DIRECTIONAL ARROWS (SHADED AREA INDICATES FACE)
	EXIT LIGHTING FIXTURE – WALL MOUNTED
ELTD	EMERGENCY LOAD TRANSFER DEVICE
S	SINGLE POLE TOGGLE SWITCH
S2	TWO POLE TOGGLE SWITCH
S3	3 WAY TOGGLE SWITCH
S4	4 WAY TOGGLE SWITCH
K	KEY OPERATED SWITCH
K3	3 WAY KEY OPERATED SWITCH
K4	4 WAY KEY OPERATED SWITCH
D	DIMMER SWITCH
D3	3 WAY DIMMER SWITCH
DO	DIMMER OCCUPANCY SENSOR SWITCH
DL	LOW VOLTAGE DIMMER SWITCH
SP	PILOT SWITCH

SYMBOL	DESCRIPTION
TWC	TWO-WAY COMMUNICATION SYSTEM CALL STATION
TWCD	TWO-WAY COMMUNICATION SYSTEM AUTO DIALER
TWCA	TWO-WAY COMMUNICATION SYSTEM ANNUNCIATOR & COMMUNICATION PANEL
TWCP	TWO-WAY COMMUNICATION SYSTEM POWER SUPPLY WITH BATTERY BACK-UP
TWCDP	TWO-WAY COMMUNICATION SYSTEM AUTO DIALER POWER SUPPLY WITH BATTERY BACK-UP
RGP	REMOTE GENERATOR ANNUCIATOR PANEL
ATS	AUTOMATIC TRANSFER SWITCH
UPS	UN-INTERRUPTABLE POWER SUPPLY
CSX	LOW VOLTAGE CONTROL STATION "X" INDICATES TYPE
	SINGLE RECEPTACLE
	DUPLEX RECEPTACLE
	QUAD RECEPTACLE
	ABOVE COUNTER DUPLEX RECEPTACLE (SIMILAR FOR TAMPER RESISTANT, QUADS, EMERGENCY AND GFI RECEPTACLES)
	DUPLEX RECEPTACLE-GROUND FAULT CIRCUIT INTERRUPTER
	DUPLEX EMERGENCY RECEPTACLE
	TAMPER RESISTANT RECEPTACLE
	QUAD TAMPER RESISTANT RECEPTACLE
	ABOVE COUNTER DUPLEX TAMPER RESISTANT RECEPTACLE
	DUPLEX UPS RECEPTACLE
	USB RECEPTACLE
	4 PORT USB CHARGING STATION
	CEILING MOUNTED DUPLEX RECEPTACLE
	POWER POLE
	SPECIAL RECEPTACLE – REFER TO ELECTRICAL STANDARD SCHEDULES
	MULTI-OUTLET RACEWAY
"X"	MULTI-SERVICE DROP SEE ELECTRICAL DETAILS AND DIAGRAMS SHEET "X" INDICATES TYPE
PTX	POKE THRU SERVICE FITTING "X" INDICATES TYPE
FBX	FLOOR BOX SERVICE FITTING "X" INDICATES TYPE
AFX	ACCESS FLOOR SERVICE FITTING "X" INDICATES TYPE
RX	CORD REEL "X" INDICATES TYPE
S3	DUAL SWITCHING FOR INNER/OUTER LAMPS OF FLUORESCENT LIGHT FIXTURES
S3S3	3-WAY DUAL SWITCHING FOR INNER/OUTER LAMPS OF FLUORESCENT LIGHT FIXTURES
S4S4	4-WAY DUAL SWITCHING FOR INNER/OUTER LAMPS OF FLUORESCENT LIGHT FIXTURES
ST	DIGITAL TIME SWITCH
SI	ILLUMINATED TOGGLE SWITCH FOR CONTROL OF LIGHTING ON CRITICAL POWER-ILLUMINATED WHEN SWITCH IS IN "OFF" POSITION
SL	LOW VOLTAGE SWITCH
SO	OCCUPANCY SENSOR (REFER TO ELECTRICAL STANDARD SCHEDULES)
SO2	OCCUPANCY SENSOR
OS X	OCCUPANCY SENSOR "X" INDICATES TYPE

SYMBOL	DESCRIPTION
CP	CONTROL PANEL
	MOTOR
VFC	VARIABLE FREQUENCY CONTROLLER.
	MANUAL CONTROLLER
	MAGNETIC CONTROLLER
	COMBINATION MAGNETIC CONTROLLER
	NON-FUSIBLE DISCONNECT SWITCH
	FUSIBLE DISCONNECT SWITCH
CB	ENCLOSED CIRCUIT BREAKER
	PUSH BUTTON STATION
J	JUNCTION BOX
	HARD WIRE POWER CONNECTION
DP	AUTOMATIC DOOR CONTROLLER
PP	AUTOMATIC DOOR PUSH PAD OPERATOR
	GROUND ROD
	GROUND CONNECTION
X	CONDUIT SLEEVE WITH BUSHINGS LENGTH AS REQUIRED "X" INDICATES CONDUIT SIZE
	CONDUIT UP
	CONDUIT DOWN
	EMPTY BOX FOR FUTURE TELECOMMUNICATION OUTLET (REFER TO ELECTRICAL STANDARD SCHEDULES)
	ABOVE COUNTER EMPTY BOX FOR FUTURE TELECOMMUNICATION OUTLET (REFER TO ELECTRICAL STANDARD SCHEDULES)
	EMPTY BOX FOR FUTURE CEILING MOUNTED TELECOMMUNICATION OUTLET (REFER TO ELECTRICAL STANDARD SCHEDULES)
X	TELECOMMUNICATION OUTLET "X" INDICATES TYPE (REFER TO ELECTRICAL STANDARD SCHEDULES)
X	ABOVE COUNTER TELECOMMUNICATION OUTLET "X" INDICATES TYPE (REFER TO ELECTRICAL STANDARD SCHEDULES)
X	TELECOMMUNICATION CEILING MOUNTED OUTLET "X" INDICATES TYPE (REFER TO ELECTRICAL STANDARD SCHEDULES)
	TELECOMMUNICATION BACKBOARD
TGB	TELECOMMUNICATION GROUNDING BUS BAR
TMGB	TELECOMMUNICATION MAIN GROUNDING BUS BAR
IC	INTERCOM OUTLET
S	SPEAKER
S	SPEAKER – WALL MOUNTED
MIC	MICROPHONE
VC	VOLUME CONTROL/STATION SELECTOR
B	SIGNALING BELL
	SINGLE FACE CLOCK – CEILING MOUNTED
	SINGLE FACE CLOCK – WALL MOUNTED
	DOUBLE FACE CLOCK – CEILING MOUNTED
S	DOUBLE FACE COMBINATION CLOCK/SPEAKER CEILING MOUNTED
	DOUBLE FACE CLOCK – WALL MOUNTED
S	DOUBLE FACE COMBINATION CLOCK/SPEAKER WALL MOUNTED
TC	TIME CLOCK
C	CONTACTOR
P	PHOTOCELL
TT	TWIST TIMER

SYMBOL	DESCRIPTION
	SECURITY CAMERA
MD	MOTION DETECTOR
	SECURITY KEY SWITCH
DC	DOOR CONTACT
KP	KEY PAD
CR	ACCESS CONTROL STATION
DB	DURESS PUSH BUTTON STATION
DE	DELAYED EGRESS
REX	REQUEST TO EXIT STATION
	CIRCUIT BREAKER
	DRAWOUT CIRCUIT BREAKER MANUALLY/ OPERATED
	DRAWOUT CIRCUIT BREAKER ELECTRICALLY/ OPERATED
	SWITCH
	AUTOMATIC OR MANUAL TRANSFER SWITCH
	FUSE
	TRANSFORMER
	CURRENT TRANSFORMER
	POTENTIAL TRANSFORMER
	LIGHTNING ARRESTOR
X	PANELBOARD "X" INDICATES PANELBOARD NAME
	GROUND
	STRESS CONE TERMINATION
K	SECURITY KEY INTERLOCK
G	ENGINE GENERATOR
W	UTILITY METER
EMU	ELECTRONIC METERING UNIT
A	AMMETER
V	VOLTMETER
AS	AMMETER SWITCH
VS	VOLTMETER SWITCH
SPD	SURGE PROTECTIVE DEVICE
CR	CONTROL RELAY
TDR	TIME DELAY RELAY
	THERMAL OVERLOAD RELAY
	NORMALLY OPEN CONTACTS
	NORMALLY CLOSED CONTACTS
	N.O. PUSH BUTTON SINGLE CIRCUIT
	N.C. PUSH BUTTON SINGLE CIRCUIT
O X-X	CABLE VAULT "X-X" INDICATES TYPE
	BRANCH CIRCUIT PANELBOARD
	LOAD CENTER
	MOTOR CONTROL CENTER
T	TRANSFORMER
	DISTRIBUTION PANEL
GB	GROUND BUS
PB	PLUG IN BUSWAY
FB	FEEDER BUSWAY

SYMBOL	DESCRIPTION
F	MANUAL FIRE ALARM BOX
SD	SMOKE DETECTOR
DD	DUCT SMOKE DETECTOR
CO	CARBON MONOXIDE DETECTOR
RT	REMOTE TEST STATION (FOR DUCT DETECTOR)
TD	THERMAL DETECTOR
BD	PROJECTED BEAM DETECTOR
F	FIRE ALARM BELL
F	FIRE ALARM AUDIBLE NOTIFICATION APPLIANCE
XX	FIRE ALARM VISUAL NOTIFICATION APPLIANCE "XX" INDICATES CANDELA RATING IF NO RATING SHOWN, APPLIANCE IS 15cd
XX	FIRE ALARM COMBINATION VISUAL/ AUDIBLE "XX" INDICATES CANDELA RATING IF NO RATING SHOWN, APPLIANCE IS 15cd
F XX	FIRE ALARM COMBINATION VISUAL/ AUDIBLE NOTIFICATION APPLIANCE- CEILING MOUNTED "XX" INDICATES CANDELA RATING IF NO RATING SHOWN, APPLIANCE IS 15cd
XX	FIRE ALARM VISUAL NOTIFICATION APPLIANCE CEILING MOUNTED "XX" INDICATES CANDELA RATING IF NO RATING SHOWN, APPLIANCE IS 15cd
F	FIRE ALARM AUDIBLE NOTIFICATION APPLIANCE – CEILING MOUNTED
F	FIREFIGHTERS PHONE JACK
FACP	FIRE ALARM CONTROL PANEL
FAA	FIRE ALARM ANNUNCIATOR PANEL
NAC	NOTIFICATION APPLIANCE CIRCUIT EXTENDER PANEL
IM	ADDRESSABLE MONITORING MODULE
CM	ADDRESSABLE CONTROL MODULE
TS	TAMPER SWITCH
FS	FLOW SWITCH
DR	MAGNETIC DOOR RELEASE

ELECTRICAL DRAWING INDEX

SHEET NO.	SHEET TITLE
E0.1BV	ELECTRICAL STANDARDS AND DRAWING INDEX
E0.2BV	ELECTRICAL STANDARD SCHEDULES
E0.3BV	ELECTRICAL SITE PLAN
ED1.1BV	ELECTRICAL DEMOLITION PLAN – AREA 'A'
ED1.2BV	ELECTRICAL DEMOLITION PLAN – AREA 'B'
E2.1BV	LIGHTING NEW WORK PLAN – AREA 'A'
E2.2BV	LIGHTING NEW WORK PLAN – AREA 'B'
E3.1BV	POWER NEW WORK PLAN – AREA 'A'
E3.2BV	POWER NEW WORK PLAN – AREA 'B'
E5.1BV	ONE LINE DIAGRAM
E5.2BV	PANEL SCHEDULES
E7.1BV	ELECTRICAL DETAILS
E7.2BV	ELECTRICAL DETAILS

ELECTRICAL ABBREVIATION LIST

ABBREVIATION	DESCRIPTION
A	AMPERES
AF	AMPERES FRAME (BREAKER RATING)
A.F.F.	ABOVE FINISH FLOOR
AIC	AMPS INTERRUPTING CAPACITY
AL	AUDIENCE LEFT
AR	AUDIENCE RIGHT
AT	AMPERES TRIP (BREAKER SETTING)
ATS	AUTOMATIC TRANSFER SWITCH
AUX	AUXILIARY
BKR	BREAKER
BPS	BOLTED PRESSURE SWITCH
C	CONDUIT
CB	CIRCUIT BREAKER
CFCI	CONTRACTOR FURNISHED, CONTRACTOR INSTALLED
CKT	CIRCUIT
CT	CURRENT TRANSFORMER
DEMO	DEMOLITION
DIM	DIMENSION
DISC	DISCONNECT
DP	DISTRIBUTION PANEL
DS	DOWNSTAGE
DWG	DRAWING
EBU	EMERGENCY BATTERY UNIT
EC	ELECTRICAL CONTRACTOR
ELEC	ELECTRICAL
EM/ EMERG	EMERGENCY
EMT	ELECTRICAL METALLIC TUBING
EO	ELECTRICALLY OPERATED
EPO	EMERGENCY POWER OFF
EWC	ELECTRIC WATER COOLER
EXIST	EXISTING
FA	FIRE ALARM
FLA	FULL LOAD AMPS
FLR	FLOOR
FOH	FRONT OF HOUSE
FSEC	FOOD SERVICE EQUIPMENT CONTRACTOR
FU	FUSE

ABBREVIATION	DESCRIPTION
G/GRD/EG	GROUND
GFCI	GROUND FAULT CIRCUIT INTERRUPTER
GFP	GROUND FAULT PROTECTION
HOA	HAND-OFF-AUTO
HP	HORSEPOWER
HV	HIGH VOLTAGE
HZ	HERTZ
IG	ISOLATED GROUND
JB	JUNCTION BOX
KV	KILOVOLT
KVA	KILOVOLT – AMPERES
KW	KILOWATT
KWH	KILOWATT – HOURS
LA	LIGHTNING ARRESTOR
LP	LIGHTING PANEL
LDP	LIGHTING DISTRIBUTION PANEL
MAX	MAXIMUM
MCB	MAIN CIRCUIT BREAKER
MCC	MOTOR CONTROL CENTER
MDP	MAIN DISTRIBUTION PANEL
MECH	MECHANICAL
MIN	MINIMUM
MISC.	MISCELLANEOUS
MLO	MAIN LUGS ONLY
MTD	MOUNTED
MTG	MOUNTING
MTR	MOTOR
N	NEUTRAL
NC	NORMALLY CLOSED
NEC	NATIONAL ELECTRICAL CODE
NF	NON-FUSIBLE
NIC	NOT IN CONTRACT
NL	NIGHT LIGHT
NO	NORMALLY OPEN
NTS	NOT TO SCALE

ABBREVIATION	DESCRIPTION
OC	ON CENTER
OFCI	OWNER FURNISHED, CONTRACTOR INSTALLED
OFOI	OWNER FURNISHED, OWNER INSTALLED
P	POLE
PB	PUSHBUTTON STATION
PH	PHASE
PT	POTENTIAL TRANSFORMER
PDP	POWER DISTRIBUTION PANEL
RECEPT.	RECEPTACLE
RDP	RECEPTACLE DISTRIBUTION PANEL
RP	RECEPTACLE PANEL
RSC	RIGID STEEL CONDUIT
SCHED	SCHEDULE
SW	SWITCH
SWBD	SWITCHBOARD
SWGR	SWITCHGEAR
TB	TERMINAL BOX
TELECOM	TELECOMMUNICATIONS
TR	TAMPER RESISTANT
TTB	TELEPHONE TERMINAL BACKBOARD
TYP	TYPICAL
U.O.N.	UNLESS OTHERWISE NOTED
US	UPSTAGE
V	VOLTS
W	WIRE
WP	WEATHERPROOF
XFMR	TRANSFORMER
XP	EXPLOSION PROOF
(E)	EXISTING
(R)	RELOCATED

STANDARD MOUNTING HEIGHTS

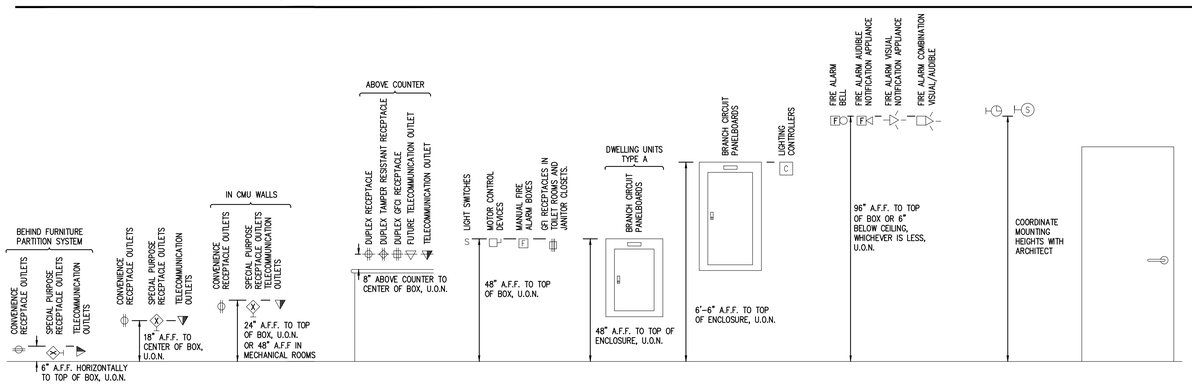

STANDARD METHODS OF NOTATION

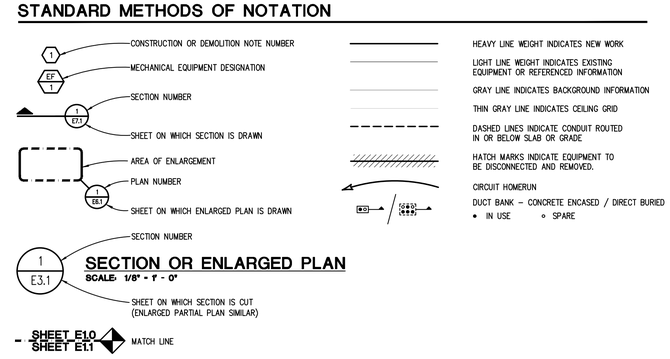

WAKELY ASSOCIATES, INC.
ARCHITECTS & ENGINEERS
30500 VAN DYKE AVE.
SUITE M-7
WARREN, MICHIGAN, 48093
TEL. 586-573-4100
FAX. 586-573-0822
E-MAIL: WA@WAKELYAIA.COM

Peter Basso Associates Inc
CONSULTING ENGINEERS
5145 Livernois, Suite 100
Troy, Michigan 48098-3276
Tel: 248-879-5666
Fax: 248-879-0007
www.PeterBassoAssociates.com
PBA Project No.: 2015-0144

FARMINGTON PUBLIC SCHOOLS - 2015 BOND
2018 PROJECTS
KENBROOK & BEECHVIEW ELEMENTARY SCHOOLS

BEECHVIEW ELEMENTARY SCHOOL

ELECTRICAL STANDARDS AND DRAWING INDEX

PRELIMINARY ☐
DESIGN DEVELOPMENT ☐
CONSTRUCTION ■
FINAL RECORD ☐

DRAWN BY: JRD
CHECKED BY: GJZ

REVISIONS:

DATE: 12-15-17

SHEET NO.: E0.1BV

JOB NO.: 171712A

g:\2015\2015-0144-00\Cad\beechview es\2015-0144-BV-E0-IND.dwg, E0.1BV, 12/12/2017 2:28:35 PM, Suha A. Matti, _Default.pc3 ,0.09094, Peter Basso Associates Inc.

BEECHVIEW ES LIGHTING FIXTURE SCHEDULE

TYPE	DESCRIPTION	MANUFACTURERS	LAMPS
L1 GYM	LED ROUND HIGH BAY LIGHT FIXTURE: UV STABILIZED POLYCARBONATE REFLECTOR. DIE CAST ALUMINUM HEAT SINK, MULTI VOLT DRIVER AC INPUT, CLASS P SOLID STATE RATED FOR A MINIMUM OF 50,000 HOURS OF OPERATION, 5 YEAR WARRANTY. FIELD VERIFY FIXTURE VOLTAGE PRIOR TO ORDERING FIXTURES.	1. EVERLAST LEGEND SERIES 2. MHT LTG MHTL–HB SERIES 3. HOLOPHANE PHG SERIES 4. SPECGRADE HXBA SERIES 5. DAYBRITE RBX SERIES	LED 4000K WHITE 17,000 LUMENS 80 CRI MINIMUM
L2 CAFETERIA	LED 2X4 RECESSED LAY IN LIGHT FIXTURE: 3–1/4" DEEP HOUSING. DIE CAST ALUMINUM HEAT SINK MULTI VOLT DRIVER AC INPUT, CLASS P SOLID STATE, RATED FOR A MINIMUM OF 50,000 HOURS OF OPERATION. 5 YEAR FULL COVER WARRANTY.	1. METALUX GRLED SERIES 2. LITHONIA 2GTL SERIES 3. VISIONEERING LRTA SERIES 4. DAY–BRITE 2GT SERIES 5. WILLIAMS 50 SERIES	LED 4000K WHITE 7200 LUMENS 80 CRI MINIMUM
L3 RESTROOM	LED 1X4 RECESSED LIGHT FIXTURE: DIE FORMED WELDED STEEL HOUSING. ELECTROSTATICALLY APPLIED WHITE POWDER COAT FINISH. 18 GAUGE STEEL DOOR FRAME, ONE PIECE WITH DIE FORMED EDGES, AIRCRAFT CABLE TETHER FROM DOOR FRAME TO FIXTURE. STAINLESS STEEL TAMPER RESISTANT T20 TORX SCREWS. PROVED (2) SCREW DRIVERS FOR OWNER. LENS SHALL BE PRISMATIC POLYCARBONATE. DIE CAST ALUMINUM HEAT SINK, MULTI VOLT DRIVER AC INPUT, CLASS P SOLID STATE RATED FOR A MINIMUM OF 50,000 HOURS OF OPERATION. 5 YEAR WARRANTY. PROVIDE WITH MUD FLANGE FOR GYP CEILING.	1. KENALL HASEDI SERIES 2. FAIL–SAFE FSR SERIES 3. NEWSTAR 37M14 SERIES 4. WILLIAMS 50 SERIES 5. DAYBRITE 1LT SERIES	LED 4000K WHITE 4000 LUMENS 80 CRI MINIMUM
L4 OFFICE	LED 2X4 RECESSED CENTER BASKET LIGHT FIXTURE: DIE CAST ALUMINUM HEAT SINK MULTI VOLT DRIVER AC INPUT, CLASS P SOLID STATE, RATED FOR A MINIMUM OF 50,000 HOURS OF OPERATION. 5 YEAR FULL COVER WARRANTY.	1. LITHONIA 2VTL SERIES 2. METALUX 24CZ SERIES 3. VISIONEERING LRTM SERIES 4. DAY–BRITE 2EV SERIES 5. WILLIAMS CDA SERIES	LED 4000K WHITE 4000 LUMENS 80 CRI MINIMUM
L5 CORRIDORS	LED 2X4 RECESSED LAY IN LIGHT FIXTURE: 3–1/4" DEEP HOUSING. DIE CAST ALUMINUM HEAT SINK MULTI VOLT DRIVER AC INPUT, CLASS P SOLID STATE, RATED FOR A MINIMUM OF 50,000 HOURS OF OPERATION. 5 YEAR FULL COVER WARRANTY.	1. METALUX GRLED SERIES 2. LITHONIA 2GTL SERIES 3. VISIONEERING LRTA SERIES 4. DAY–BRITE 2GT SERIES 5. WILLIAMS 50 SERIES	LED 4000K WHITE 4000 LUMENS 80 CRI MINIMUM
L6 CLASSROOMS	LED 2X4 RECESSED LAY IN LIGHT FIXTURE: 3–1/4" DEEP HOUSING. DIE CAST ALUMINUM HEAT SINK MULTI VOLT DRIVER AC INPUT, CLASS P SOLID STATE, RATED FOR A MINIMUM OF 50,000 HOURS OF OPERATION. 5 YEAR FULL COVER WARRANTY.	1. METALUX GRLED SERIES 2. LITHONIA 2GTL SERIES 3. VISIONEERING LRTA SERIES 4. DAY–BRITE 2GT SERIES 5. WILLIAMS 50 SERIES	LED 4000K WHITE 5400 LUMENS 80 CRI MINIMUM
L7 MEDIA CENTER	LED 6 INCH APERTURE RECESSED DOWN LIGHT FIXTURE: WARM WHITE LED SOURCE WITH MAXIMUM COLOR TEMPERATURE DIFFERENTIATION OF ± 100K. VENTILATED DIE CAST ALUMINUM HEAT SINK, SELF FLANGED REFLECTOR WITH MATTE FINISH. MULTI VOLT DRIVER, AC INPUT. CLASS P, SOLID STATE, RATED FOR MINIMUM 50,000 HOURS OF OPERATION. 5 YEAR WARRANTY.	1. PORTFOLIO LD6A SERIES 2. GOTHAM EVO SERIES 3. PEACHTREE BLRD SERIES 4. CALCULITE CBL SERIES 5. WILLIAMS L60 SERIES	LED 4000K WHITE 1800 LUMENS 80 CRI MINIMUM
L8 CANOPY	LED SURFACE MOUNTED CANOPY FIXTURE: 12" SQUARE, 3" DEEP SURFACE MOUNTED CANOPY FIXTURE; DIE FORMED ALUMINUM HOUSING; MULTI VOLT DRIVER; UV RESISTANT POLYESTER POWDER COAT FINISH; TYPE V DISTRIBUTION; FULLY GASKETED AND WET LOCATION LISTED.	1. BARRON TRACE–LITE TLED SERIES 2. GARDCO SFC SERIES 3. KENALL MS11FL SERIES 4. ENGINEER APPROVED EQUAL	LED 4000K WHITE 80 CRI MINIMUM 2,500 LUMENS MINIMUM
L9 EXTERIOR WALL ALTERNATE E1D	LED ARCHITECTURAL TRAPEZOIDAL WALL PACK LIGHT FIXTURE: FORWARD THROW, WEATHER RESISTANT ALUMINUM HOUSING WITH INTEGRAL WEATHER TIGHT LED DRIVER WITH HIGH PERFORMANCE ALUMINUM HEAT SINKS. U.L. LISTED FOR WET LOCATIONS. FIXTURE SHALL BE COMPLETELY GASKETED, MULTI VOLT DRIVER AC INPUT, CLASS P SOLID STATE, RATED FOR A MINIMUM 50,000 HOURS OF OPERATION. 5 YEAR WARRANTY. BLACK COLOR. FIELD VERIFY FIXTURE VOLTAGE PRIOR TO ORDERING FIXTURES.	1. LITHONIA WST–LED SERIES 2. MCGRAW–EDISON IST B01 SERIES 3. SPAULDING TRP SERIES 4. GARDCO 121 SERIES 5. LSI SWP SERIES	LED 4000K WHITE 2000 LUMENS 80 CRI MINIMUM
L10 PARKING LOT ALTERNATE E1D	LED POLE MOUNTED PARKING LOT LIGHT FIXTURE: POLE TOP CONFIGURATION AS SHOWN ON PLAN. TYPE (4) DISTRIBUTION. FULLY GASKETED ALUMINUM HOUSING WITH INTEGRAL WEATHER TIGHT ELECTRONIC MULTI–VOLT LED DRIVER THAT IS U.L. LISTED FOR WET LOCATIONS. FUSED AT HAND HOLE. PROVIDE NEW MOUNTING ARM(S) AS REQUIRED. FIXTURE COLOR SHALL BE BLACK WITH A 10 YEAR WARRANTY. FIELD VERIFY FIXTURE VOLTAGE PRIOR TO ORDERING FIXTURES.	1. LITHONIA D SERIES 2. CREE OSQ SERIES 3. COOPER GALLEON SERIES 4. GARDCO ECF SERIES 5. LSI MIRADA SERIES	LED 4000K WHITE 80 CRI MINIMUM 20,000 LUMENS MINIMUM
X	EXIT LIGHT SHALL BE MOUNTED AS REQUIRED, WITH WHITE DIE CAST ALUMINUM HOUSING, HIGH OUTPUT LED DIFFUSE LIGHT PANEL, SINGLE STENCIL WHITE FACE WITH RED LETTERS AND SUITABLE FOR MULTI VOLT (FUSED) OPERATION. PROVIDE DIRECTIONAL ARROW AS INDICATED ON PLAN. PROVIDE WITH INTEGRAL BATTERY BACKUP WITH SELF DIAGNOSTICS.	1. LITHONIA SIGNATURE SERIES 2. SURELITE CX SERIES 3. DUAL LITE SE SERIES 4. CHLORIDE CE SERIES 5. WILLIAMS CA SERIES	LED LIGHT PANEL

FOR FIXTURES DESIGNATED WITH AN "E" SUFFIX, PROVIDE EMERGENCY BATTERY BACKUP BALLAST. REFER TO SPECIFICATIONS FOR REQUIREMENTS.

ALTERNATE E1BV: DEDUCT PRICE OF BATTERY PACKS FOR "E" FIXTURES AND EXIT SIGNS AS THEY WILL NOT BE REQUIRED.

MOTOR CIRCUIT SIZING SCHEDULE (208V, 3 PHASE)

MOTOR HP	SWITCH/ FUSE	CIRCUIT BREAKER	STARTER SIZE/TYPE	MOTOR DISCONNECT (NOTE 3)
1/2	30/6A	15A	1	30A
3/4	30/6A	15A	1	30A
1	30/10A	15A	1	30A
1 1/2	30/10A	15A	1	30A
2	30/10A	15A	1	30A
3	30/20A	20A	1	30A
5	30/25A	35A	1	30A
7 1/2	60/40A	50A	1	60A
10	60/50A	60A	2	60A
15	60/60A	90A	3	60A
20	100/90A	100A	3	100A
25	100/100A	110A	3	100A
30	200/125A	125A	4	200A
40	200/175A	175A	4	200A
50	200/200A	200A	5	200A
60	400/250A	250A	5	400A
75	400/300A	300A	5	400A
100	400/400A	400A	6	400A
125	600/500A	600A	6	600A
150	600/600A	600A	6	600A

NOTES:

1. BASED ON MOTOR FULL LOAD AMPERES AS PROVIDED BY THE N.E.C.
2. BASED ON MOTOR RUNNING OVERLOAD PROTECTIONS PROVIDED BY THERMAL OVERLOAD RELAYS.
3. WHERE THE STARTER IS LOCATED REMOTE FROM THE MOTOR, PROVIDE DISCONNECT LOCATED AT THE MOTOR, SIZE AS INDICATED.

OCCUPANCY/VACANCY SENSOR LEGEND

TYPE	DESCRIPTION
OS_A	360° CEILING MOUNTED DUAL TECHNOLOGY OCCUPANCY/VACANCY SENSOR
OS_B	90° CEILING/WALL MOUNTED DUAL TECHNOLOGY OCCUPANCY/VACANCY SENSOR
OS_C	360° CEILING MOUNTED PASSIVE INFRARED OCCUPANCY/VACANCY SENSOR
OS_D	360° CEILING MOUNTED ULTRASONIC OCCUPANCY/VACANCY SENSOR
OS_E	360° CEILING MOUNTED ULTRASONIC OCCUPANCY/VACANCY SENSOR – CORRIDOR OPTIMIZED
So	WALL SWITCH OCCUPANCY/VACANCY SENSOR
So_2	WALL SWITCH OCCUPANCY SENSOR/VACANCY – DUAL LEVEL SWITCHING
Do	WALL DIMMER SWITCH OCCUPANCY/VACANCY SENSOR

NOTES:

1. PLACE CEILING MOUNTED SENSORS IN A FULL CEILING TILE, WHERE APPLICABLE. FOR WALL MOUNTED SENSORS, MANUFACTURER SHALL DETERMINE MOUNTING HEIGHT.
2. ALL OCCUPANCY/VACANCY SENSORS ARE SHOWN IN APPROXIMATE LOCATIONS. THE LIGHTING CONTROLS MANUFACTURER SHALL SHOW ALL DEVICES IN EXACT LOCATIONS ON SHOP DRAWINGS. THE LIGHTING CONTROLS MANUFACTURER SHALL PROVIDE/RELOCATE/ADD DEVICES AS REQUIRED TO COMPLY WITH ASHRAE 90.1–2013. ANY ADDITIONAL SENSORS ADDED SHALL BE DONE WITH NO ADDITIONAL EXPENSE TO OWNER.
3. MANUFACTURER SHALL PROVIDE SPECIFIC WIRING DIAGRAM FOR EACH DESIGNATED AREA OF USE OF OCCUPANCY/VACANCY/PHOTOCELL CONTROL. WIRING DIAGRAMS INDICATED ON THE DRAWINGS INDICATE INTENT ONLY. ELECTRICAL CONTRACTOR SHALL FOLLOW SPECIFIC WIRING DIAGRAMS FROM THE MANUFACTURER.
4. COORDINATE AND PROVIDE ALL REQUIRED COMPONENTS FOR A COMPLETE SYSTEM.
5. ADJUST SENSOR SENSITIVITY LEVELS PER OWNER REQUIREMENTS. ADJUST SENSOR TIME DURATION PER ASHRAE 90.1–2013.

DTE LIGHTING INCENTIVES PROGRAM

THE ELECTRICAL CONTRACTOR SHALL INCLUDE IN HIS BID AND BE RESPONSIBLE FOR PROVIDING AND MEETING ALL REQUIREMENTS FOR THE OWNER TO PARTICIPATE IN THE CURRENT DTE ENERGY SAVINGS PROGRAM. THE FOLLOWING ITEMS WILL BE REQUIRED BUT NOT LIMITED TO, FOR THE OWNER TO PARTICIPATE IN THIS PROGRAM:

1. ON BEHALF OF THE OWNER, PROVIDE ALL REQUIRED INFORMATION FOR THE RESERVATION APPLICATION AND THE FINAL APPLICATION. REFER TO DTE ENERGY PROGRAM APPLICATION AT www.dteenergy.com/savenow.
2. CONTRACTOR BUSINESS INFORMATION.
3. LIGHTING INCENTIVES WORKSHEET/CUSTOM INCENTIVE WORKSHEET, AS REQUIRED.
4. TYPE OF FIXTURES REMOVED, WATTAGE AND LAMP SIZE.
5. EASY TO READ ITEMIZED INVOICES WITH PART NUMBERS OF ALL LIGHT FIXTURES, BALLASTS AND LAMPS.
6. MANUFACTURERS CUT SHEETS WITH HIGHLIGHTED FIGURES, BALLAST, LAMPS, TYPE OF FIXTURE, ETC. AS REQUIRED BY DTE.
7. MEASURES ARE COMPLETELY INSTALLED WITHIN 90 DAYS OF PROJECT APPROVAL.

IT IS THE ELECTRICAL CONTRACTORS RESPONSIBILITY TO CONTACT DTE'S ENERGY SAVINGS TEAM OR ASSIGNED REPRESENTATIVE IF A PROJECT IS DELAYED, OR SUBSTANTIALLY CHANGED.

THE ELECTRICAL CONTRACTOR SHALL WORK WITH AND COORDINATE WITH THE OWNER FOR THE RESERVATION AND FINAL APPLICATION PROCESS PRIOR TO SITE WORK BEING CONDUCTED AND POST REVIEW INSPECTION FOR REMOVAL AND INSTALLATION OF ALL EQUIPMENT RELATED TO THE INCENTIVE PROGRAM.

RACEWAY APPLICATION SCHEDULE

RACEWAY		AC/MC CABLE	ALUMINUM RIGID CONDUIT	ELECTRICAL METALLIC TUBING (EMT)	SURFACE RACEWAY	ELECTRICAL NONMETALLIC TUBING (ENT)	FLEXIBLE METAL CONDUIT (FMC)	GENERAL–USE OPTICAL FIBER/COMMUNICATION CABLE RACEWAY	INTERMEDIATE METAL CONDUIT (IMC)	LIQUIDTIGHT FLEXIBLE METAL CONDUIT (LFMC)	LIQUIDTIGHT FLEXIBLE NONMETAL CONDUIT (LFNC)	FLOOR–TYPE OPTICAL FIBER/COMMUNICATIONS CABLE RACEWAY	RIGID STEEL CONDUIT	RISER–TYPE OPTICAL FIBER/COMMUNICATIONS CABLE RACEWAY	RIGID NONMETALLIC CONDUIT (RNC) TYPE EPC–40	RIGID NONMETALLIC CONDUIT (RNC) TYPE EPC–80	HIGH DENSITY POLYTHYLENE (HDPE) SCHEDULE 40	HIGH DENSITY POLYTHYLENE (HDPE) SCHEDULE 80	KEYED NOTES
OUTDOOR	EXPOSED								X					X					
	CONCEALED (ABOVE GROUND)								X					X					
	UNDERGROUND													X		X	X	X	X	
	CONNECTED TO VIBRATING EQUIPMENT								X											EQUIPMENT INCLUDING: TRANSFORMERS, HYDRAULIC PNEUMATIC, ELECTRIC SOLENOID, MOTOR DRIVEN EQUIPMENT
INDOOR	EXPOSED NOT SUBJECT TO PHYSICAL DAMAGE – UNFINISHED SPACES			X															
	EXPOSED NOT SUBJECT TO PHYSICAL DAMAGE – FINISHED SPACES				X														
	EXPOSED SUBJECT TO SEVERE PHYSICAL DAMAGE								X					X					RIGID STEEL CONDUIT UP TO 10'–0"AFF. LOCATIONS INCLUDE: LOADING DOCKS, CORRIDORS USED FOR TRAFFIC OF MECHANIZED CARTS AND PALLET HANDLING UNITS, MECHANICAL ROOMS
	CONCEALED IN CEILINGS, INTERIOR WALL AND PARTITIONS	X		X															NOT TO EXCEED 6'–0" IN CEILING SPACE
	CONNECTED TO VIBRATING EQUIPMENT						X			X									EQUIPMENT INCLUDING: TRANSFORMERS, HYDRAULIC PNEUMATIC, ELECTRIC SOLENOID, MOTOR DRIVEN EQUIPMENT USE LFMC IN DAMP/WET LOCATIONS
	DAMP AND WET LOCATIONS								X					X					
	BELOW SLAB IN GRADE															X	X		PROVIDE RIGID STEEL ELBOWS WHERE CONDUIT PENETRATES SLAB. CONDUIT INSTALLED 6" BELOW BOTTOM OF SLAB
	EMBEDDED IN CONCRETE ABOVE GRADE													X		X	X		
	OPTICAL FIBER OR COMMUNICATIONS CABLE IN SPACES USED FOR ENVIRONMENTAL AIR			X								X							
	CONCEALED GENERAL PURPOSE DISTRIBUTION OF OPTICAL FIBER OR COMMUNICATION CABLE			X				X				X		X					
SPECIAL APPLICATIONS	MRI		X																
	NATATORIUMS/FOUNTAINS			X															USE COMPRESSION FITTINGS. PAINTED WITH CORROSION RESISTANT PAINT BY PAINTING CONTRACTOR.

GENERAL NOTES

1. 'X' INDICATES ACCEPTABLE SELECTION.
2. REFER TO "CONDUCTORS AND CABLES" SPECIFICATION FOR APPLICATION LIMITATIONS OF AC/MC CABLE.

FEEDER AND BRANCH CIRCUIT SIZING SCHEDULE - GENERAL PURPOSE

COPPER CONDUCTORS

OVERCURRENT DEVICE RATING (AMPERES)	WIRE SIZE (AWG OR KCMIL) PHASE & NEUTRAL	WIRE SIZE (AWG OR KCMIL) GROUND	CONDUIT SIZE SINGLE PHASE 2 WIRE+G (1PH, 1N, 1G)	SINGLE PHASE 3 WIRE+G (2PH, 1N, 1G)	THREE PHASE 3 WIRE+G (3PH, 1G)	THREE PHASE & NEUTRAL 4 WIRE+G (3PH, 1N, 1G)
15–20	12	12	3/4"	3/4"	3/4"	3/4"
25–30	10	10	3/4"	3/4"	3/4"	3/4"
35–40	8	10	3/4"	3/4"	3/4"	3/4"
* 45–50	8 (6)	10	3/4"	3/4"	3/4"	3/4"
* 60	6 (4)	10	3/4" (1")	3/4" (1")	3/4" (1")	1" (1 1/4")
70	4	8	1"	1 1/4"	1 1/4"	1 1/4"
* 80	4 (3)	8	1"	1 1/4"	1 1/4"	1 1/4"
* 90–100	3 (2)	8	1 1/4"	1 1/4"	1 1/4"	1 1/4"
* 110	2 (1)	6	–	1 1/4"	1 1/4"	1 1/4" (1 1/2")
* 125	1 (1/0)	6	–	1 1/4" (1 1/2")	1 1/4" (1 1/2")	1 1/2"
150	1/0	6	–	1 1/2"	1 1/2"	1 1/2"
175	2/0	6	–	2"	2"	2"
200	3/0	6	–	2"	2"	2 1/2"
225	4/0	4	–	2"	2"	2 1/2"
250	250	4	–	2 1/2"	2 1/2"	2 1/2"
300	350	4	–	2 1/2"	2 1/2"	3"
350	500	3	–	3"	3"	3"
400	500	3	–	3"	3"	3"

* = SEE NOTE 4

NOTES:

1. CONTRACTOR TO SIZE FEEDERS AND BRANCH CIRCUITS BASED ON THIS SCHEDULE AND OVER CURRENT DEVICE SIZE, UNLESS NOTED OTHERWISE.
2. CONTRACTOR MAY COMBINE 20A CIRCUITS AS NOTED IN SPECIFICATION.
3. CONDUCTORS ARE BASED ON THHN/THWN UP TO AND INCLUDING #4/0. LARGER THAN #4/0 ARE BASED ON TYPE XHHW.
4. CONDUCTORS ARE BASED ON 90°C, 600V. INSULATED COPPER WIRE APPLIED AT 75°C FOR TERMINATION RATED 60/75°C OR 75°C. FOR TERMINATION RATED AT 60°C, USE CONDUCTORS AND CONDUIT SIZES INDICATED IN PARENTHESES.
5. CONDUIT SIZES ARE VALID FOR EMT OR RGS. CONDUIT SIZES SHALL BE ADJUSTED AS REQUIRED FOR OTHER TYPES OF CONDUIT.
6. ELECTRICAL CONTRACTOR TO COORDINATE WITH MECHANICAL CONTRACTOR AND PROVIDE REQUIRED WIRE SIZES TO ACCOMMODATE MECHANICAL EQUIPMENT LUG SIZES.
7. SIZE OF DISCONNECT SWITCH LOCATED AT EQUIPMENT SHALL BE SIZED BASED UPON OVERCURRENT PROTECTION OF THAT DEVICE.
8. OBTAIN APPROVAL FROM ENGINEER PRIOR TO INSTALLING DIFFERENT SIZE/QUANTITY OF CONDUCTORS TO OBTAIN AN EQUIVALENT AMPACITY.
9. SPLICE FROM ALUMINUM TO COPPER PRIOR TO ENTERING EQUIPMENT LISTED FOR USE WITH COPPER CONDUCTORS ONLY OR USE COPPER CONDUCTORS FOR THE ENTIRE LENGTH OF FEEDER.

BRANCH CIRCUIT VOLTAGE DROP WIRING SCHEDULE FOR SINGLE PHASE CIRCUITS

BRANCH CKT RATING (A)	WIRE SIZE (AWG)	MAXIMUM BRANCH CIRCUIT LENGTH (IN FEET) 120V	208V	240V	277V	480V
20A	12	83	143	165	191	331
	10	128	222	256	295	511
	8	201	348	402	464	804
	6	313	542	625	721	1250
30A	10	85	148	170	197	341
	8	134	232	268	309	536
	6	208	361	417	481	833
	4	313	542	625	721	1250

NOTES:

1. THE ABOVE TABLE VALUES ARE BASED ON COPPER CONDUCTORS, IN STEEL CONDUIT, WITH A LOAD POWER FACTOR OF 0.85 PER NEC CHAPTER 9, TABLE 9.
2. PROVIDE BRANCH CIRCUIT CONDUCTORS AS INDICATED IN THE TABLE ABOVE FOR ALL LIGHTING AND RECEPTACLE BRANCH CIRCUITS. WHERE BRANCH CIRCUITS SERVE DEDICATED EQUIPMENT, THE CONTRACTOR MAY PERFORM VOLTAGE DROP CALCULATIONS BASED ON ACTUAL EQUIPMENT CONNECTED LOAD AND PROVIDE CONDUCTORS APPROPRIATELY SIZED TO LIMIT VOLTAGE DROP TO A MAXIMUM OF 3%.
3. CONDUCTOR SIZES ARE BASED ON MAXIMUM OF 9 CURRENT CARRYING CONDUCTORS IN A SINGLE CONDUIT.
4. LIMITS FOR CONDUCTOR LENGTHS SHOWN ARE BASED ON A MAXIMUM BRANCH CIRCUIT LOADING OF 64% OF THE BRANCH BREAKER RATING AND A MAXIMUM OF 3 PERCENT VOLTAGE DROP TO COMPLY WITH ASHRAE 90.1 AND THE NEC. FOR CIRCUITS LOADED GREATER THAN 64% OF BRANCH BREAKER RATING, THE CONTRACTOR SHALL PROVIDE CONDUCTORS APPROPRIATELY SIZED TO LIMIT VOLTAGE DROP TO 3%.

NOTE: SOME SYMBOLS AND ABBREVIATIONS SHOWN MAY NOT APPLY TO THIS PROJECT.

WA

WAKELY ASSOCIATES, INC.
ARCHITECTS & ENGINEERS

30500 VAN DYKE AVE.
SUITE M-7
WARREN, MICHIGAN, 48093

TEL. 586-573-4100
FAX. 586-573-0822
E-MAIL: WA@WAKELYAIA.COM

Peter Basso Associates Inc
CONSULTING ENGINEERS
5145 Livernois, Suite 100
Troy, Michigan 48098–3276
Tel: 248-879-5668
Fax: 248-879-0007
www.PeterBassoAssoc.sites.com
PBA Project No.: 2015-0144

FARMINGTON PUBLIC SCHOOLS - 2015 BOND
2018 PROJECTS
KENBROOK & BEECHVIEW ELEMENTARY SCHOOLS

BEECHVIEW ELEMENTARY SCHOOL

ELECTRICAL STANDARD SCHEDULES

PRELIMINARY ☐
DESIGN DEVELOPMENT ☐
CONSTRUCTION ■
FINAL RECORD ☐

DRAWN BY: JRD
CHECKED BY: GJZ

REVISIONS:

DATE: 12-15-17

SHEET NO.:

E0.2BV

JOB NO.: 171712A

g:\2015\2015-0144-00\Cad\beechview es\2015-0144-BV-E0-IND.dwg, E0.2BV, 12/12/2017 2:28:37 PM, Suha A. Matti, _Default.pc3 ,0.09094, Peter Basso Associates Inc.

THE FOLLOWING DIMENSION EQUALS ONE INCH WHEN PRINTED TO SCALE. 1"

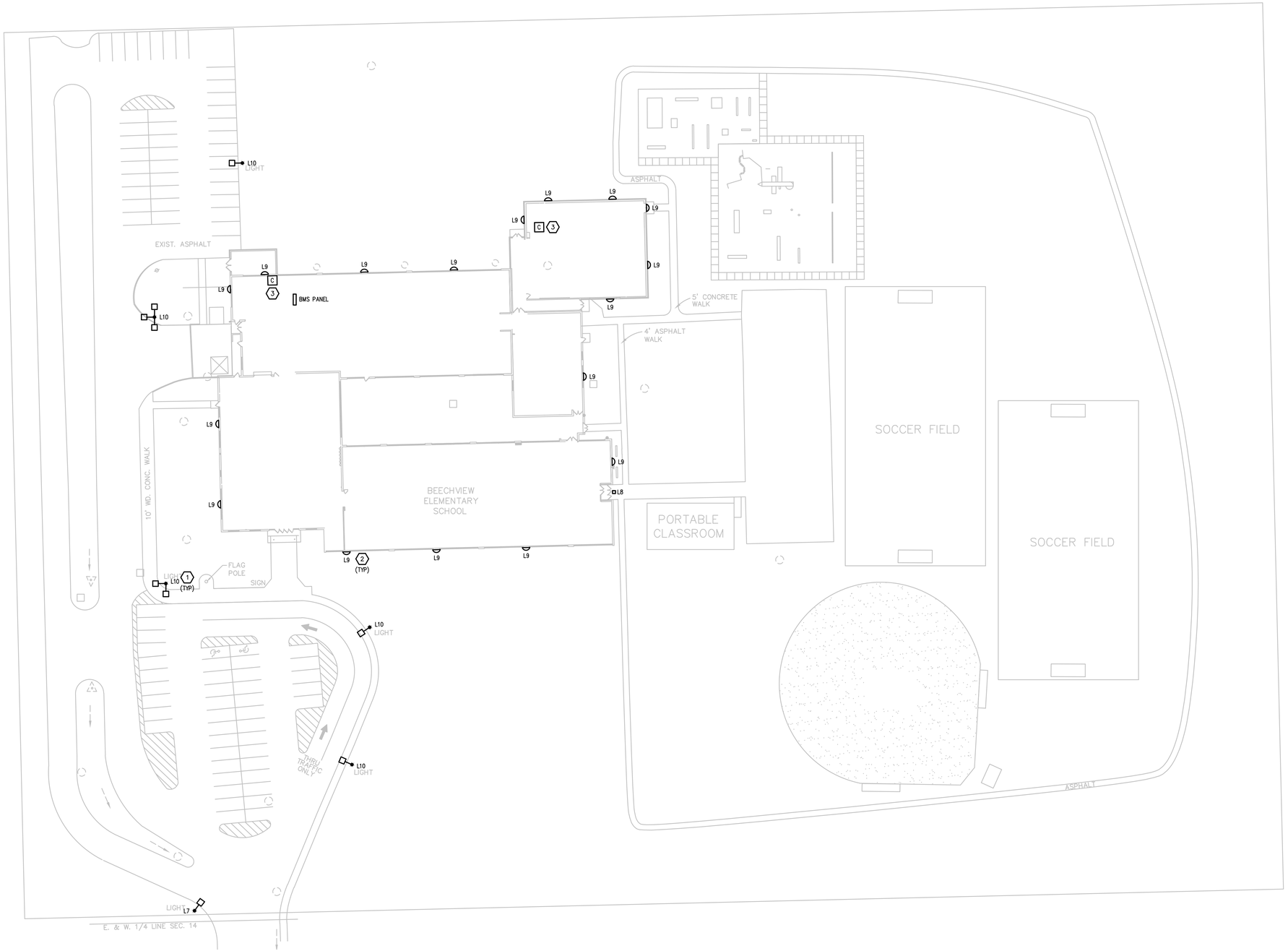

ELECTRICAL SITE PLAN

SCALE: 1" = 30'

GENERAL NOTES:

1. THESE NOTES ARE GENERIC GUIDELINES ONLY. ELECTRICAL CONTRACTOR'S PERSONNEL ON SITE SHALL BE THOROUGHLY FAMILIAR WITH THE PUBLISHED SPECIFICATIONS FOR EXACT DESCRIPTIONS OF SCOPE, METHODS, AND MATERIAL.
2. THESE DRAWINGS REPRESENT THE GENERAL EXTENT AND ARRANGEMENT OF SYSTEMS, BUT ARE NOT TO BE CONSIDERED FABRICATION DRAWINGS. COORDINATE WITH OTHER TRADES, AND PROVIDE EACH SYSTEM COMPLETE, INCLUDING ALL NECESSARY COMPONENTS, FITTINGS, AND OFFSETS.
3. CONDUCT A SURVEY TO IDENTIFY ALL UNDERGROUND UTILITIES. CALL 811 PRIOR TO EXCAVATION.
4. UTILITIES SHOWN ON THESE DRAWINGS ARE FOR REFERENCE ONLY. COORDINATE EXACT LOCATION OF ALL EXISTING UTILITIES, AND ROUTING OF ALL NEW UNDERGROUND UTILITIES PRIOR TO EXCAVATION.
5. DEWATER TRENCHES PRIOR TO INSTALLATION OF CONDUITS. PROVIDE WATER TIGHT FITTINGS ON ALL UNDERGROUND CONDUITS.
6. COORDINATE DEMOLITION WORK, AND ELECTRICAL AND TELEPHONE SERVICES TO THE SITE, WITH THE RESPECTIVE LOCAL UTILITY COMPANY REPRESENTATIVES PRIOR TO COMMENCEMENT OF WORK. INCLUDE ALL ASSOCIATED COST/FEES BY THE UTILITY COMPANIES IN THE BID PRICE.
7. INSTALL UNDERGROUND CONDUITS 42" BELOW FINISHED GRADE, MINIMUM, UNLESS NOTED OTHERWISE.
8. COORDINATE SERVICE SHUT-DOWNS WITH ALL TRADES INVOLVED ON SITE AND OBTAIN WRITTEN AUTHORIZATION FROM OWNER 72 HOURS PRIOR TO ANY ELECTRICAL AND/OR TELEPHONE SHUT-DOWN.
9. REMOVE ALL DE-ENERGIZED CONDUCTORS FROM SITE AT COMPLETION OF THE PROJECT.
10. OUTDOOR LIGHTING BRANCH CIRCUIT WIRING SHALL BE MINIMUM #8 AWG CONDUCTORS (XHHW-2), IN MINIMUM 1" DIA. CONDUIT, UNLESS NOTED OTHERWISE.
11. SPARE CONDUITS SHALL INCLUDE PULL STRING AND SHALL BE TERMINATED WITH A CAP.
12. EXCAVATE THE ENTIRE LENGTH OF TRENCH TO PROPERLY SET DUCT ELEVATIONS.

CONSTRUCTION KEY NOTES:

1. REMOVE EXISTING SITE LIGHTING FIXTURE HEAD(S) AND PROVIDE NEW AS INDICATED. CIRCUIT NEW FIXTURE HEAD TO EXISTING BRANCH CIRCUIT. MODIFY POLE AS REQUIRED TO ACCEPT NEW MOUNTING BRACKET. COORDINATE EXACT REQUIREMENTS WITH LIGHT FIXTURE MANUFACTURER.
2. REMOVE EXISTING WALL MOUNTED FIXTURE AND PROVIDE NEW AS INDICATED. CIRCUIT NEW FIXTURE TO EXISTING BRANCH CIRCUIT. EXTEND CONDUIT AND WIRE AS REQUIRED.
3. REMOVE TIME CLOCK CONTROLLER PROVIDE NEW CONTACTOR FOR EXTERIOR LIGHTING. REWORK EXISTING CIRCUITS FROM LIGHTING PANEL AS REQUIRED TO CIRCUIT THROUGH NEW CONTACTOR. NEW CONTACTOR TO BE CONTROLLED BY EXISTING BUILDING MANAGEMENTS SYSTEM. REFER TO E7 SERIES DRAWINGS FOR DETAIL. BMS PANEL LOCATED ON LOWER LEVEL OF BOILER ROOM.

Know what's **below.**
Call before you dig.

WAKELY ASSOCIATES, INC.
ARCHITECTS & ENGINEERS

30500 VAN DYKE AVE.
SUITE M-7
WARREN, MICHIGAN, 48093

TEL. 586-573-4100
FAX. 586-573-0822
E-MAIL: WA@WAKELYAIA.COM

Peter Basso Associates Inc
CONSULTING ENGINEERS
5145 Livernois, Suite 100
Troy, Michigan 48098-3276
Tel: 248-879-5668
Fax: 248-879-0007
www.PeterBassoAssociates.com
PBA Project No: 2015-0144

FARMINGTON PUBLIC SCHOOLS - 2015 BOND
2018 PROJECTS
KENBROOK & BEECHVIEW ELEMENTARY SCHOOLS

BEECHVIEW ELEMENTARY SCHOOL

ELECTRICAL SITE PLAN

PRELIMINARY ☐
DESIGN DEVELOPMENT ☐
CONSTRUCTION ■
FINAL RECORD ☐

DRAWN BY:
CHECKED BY:

REVISIONS:

DATE: 12-15-17

SHEET NO.:

E0.3BV

JOB NO.: 171712A

g:\2015\2015-0144-00\Cad\beechview es\2015-0144-BV-E0-SP.dwg, E0.3BV, 12/12/2017 2:28:46 PM, Suha A. Matti, _Default.pc3 ,0.09, Peter Basso Associates Inc.

THE FOLLOWING DIMENSION EQUALS ONE INCH WHEN PRINTED TO SCALE. 1"

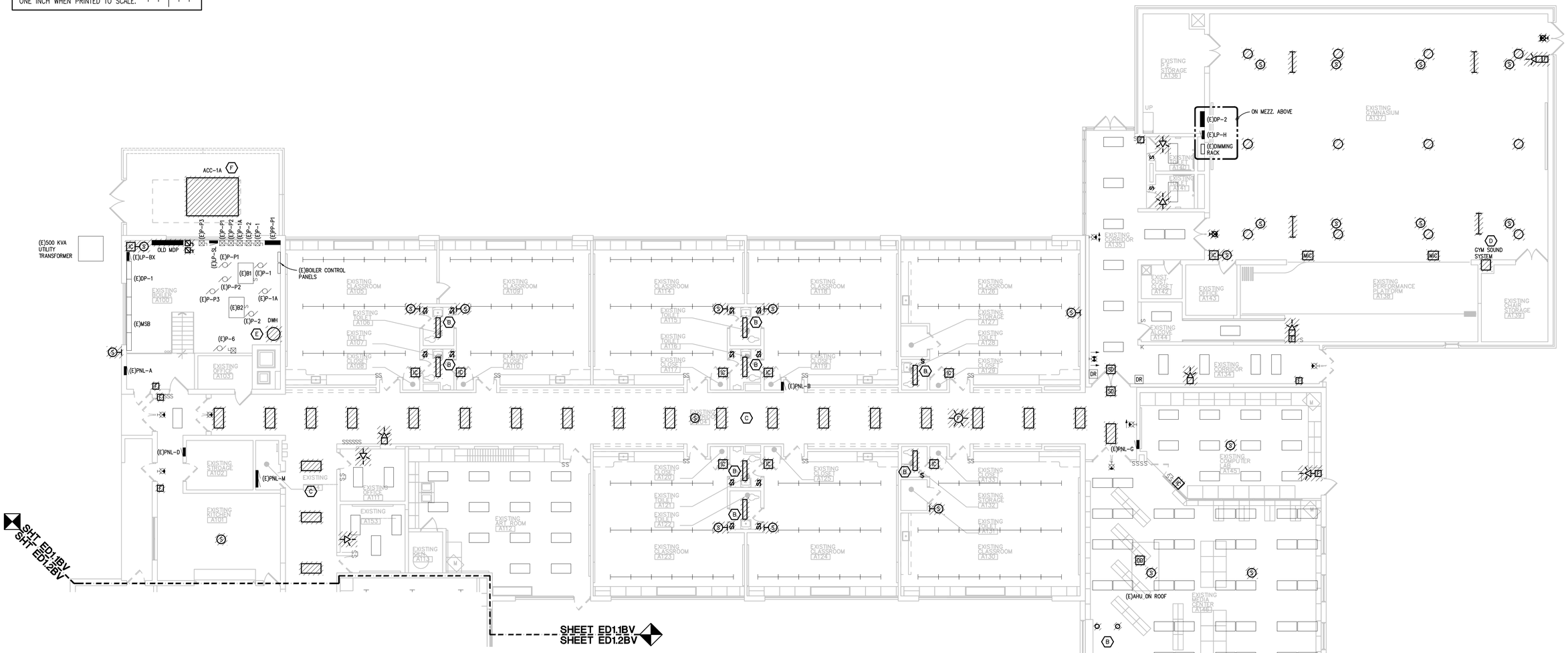

GENERAL NOTES:

1. VISIT THE SITE PRIOR TO SUBMISSION OF BID TO EXAMINE THE EXISTING CONDITIONS AND THE EXTENT OF DEMOLITION WORK.
2. EXAMINE THE DRAWINGS OF OTHER TRADES AND BE FAMILIAR WITH THE DEMOLITION REQUIRED BY OTHER TRADES. PERFORM ALL INCIDENTAL ELECTRICAL DEMOLITION AND/OR RELOCATION REQUIRED TO FACILITATE THE DEMOLITION WORK OF OTHER TRADES, WHETHER OR NOT SPECIFICALLY INDICATED.
3. REMOVE LIGHTING FIXTURES AND ELECTRICAL DEVICES AS INDICATED ON PLAN WITH CROSS HATCHING. DEMOLITION SHALL INCLUDE, BUT NOT BE LIMITED TO, THOSE DEVICES SHOWN.
4. COORDINATE WITH NEW WORK PLANS, ONE LINE DIAGRAMS AND RISER DIAGRAMS FOR EXTENT OF DEMOLITION WORK.
5. PROVIDE PROPER SUPPORT FOR EXISTING TO REMAIN CONDUITS AND BOXES WHERE EXISTING SUPPORT IS TO BE REMOVED. RE-ROUTE BRANCH CIRCUIT CONDUITS AND RELOCATE JUNCTION BOXES AS REQUIRED TO FACILITATE INSTALLATION OF NEW EQUIPMENT AND SYSTEMS IN CEILING SPACES.
6. REMOVE ALL CONDUIT AND WIRE BACK TO THE SOURCE OR NEAREST UPSTREAM DEVICE REMAINING IN SERVICE.
7. MAINTAIN ELECTRICAL SERVICE TO ALL LIGHTING FIXTURES, DEVICES AND EQUIPMENT THAT ARE TO REMAIN. EXTEND CONDUIT AND WIRE AS REQUIRED WHERE DEMOLITION WORK AFFECTS ELECTRICAL SERVICE TO DOWNSTREAM LOADS THAT ARE TO REMAIN.
8. DISPOSE OF ALL MATERIALS OFF SITE AND INCLUDE ALL COSTS FOR DISPOSAL IN BID. ALL MATERIALS SHALL BE DISPOSED OF IN ACCORDANCE WITH ALL FEDERAL, STATE, AND LOCAL REGULATIONS, INCLUDING TCLP TESTING, PROPER DISPOSAL AND/OR RECYCLING OF FLUORESCENT LAMPS.
9. PROVIDE BLANK COVER PLATES WHERE SWITCHES AND DEVICES ARE REMOVED BUT EXISTING WALLS REMAIN INTACT.
10. RING OUT AND TAG ALL CIRCUITS AFFECTED BY THIS ALTERATION AT BOTH ENDS. MARK ALL UNUSED CIRCUIT BREAKERS "SPARE".
11. PROVIDE UPDATED TYPED-IN DIRECTORIES FOR ALL PANELS AFFECTED BY THIS ALTERATION.
12. VERIFY ALL UNDERGROUND AND IN SLAB UTILITY LOCATIONS PRIOR TO SAW-CUTTING OR PENETRATING ANY FLOOR SLAB.
13. COORDINATE ANY SHUT DOWN OF EXISTING SERVICES AND EQUIPMENT THAT ARE REMAINING IN USE WITH THE OWNER'S REPRESENTATIVE. WHERE EXISTING BUILDING SERVICE IS REQUIRED TO BE SHUT DOWN, INCLUDE ALL ASSOCIATED OVERTIME COSTS TO PERFORM THIS WORK DURING WEEKENDS AND EVENINGS INCLUDE ALL COSTS FOR PROVIDING TEMPORARY POWER WHERE SHUT DOWNS MUST OCCUR FOR PERIODS LONGER THAN THESE HOURS. COORDINATE ELECTRICAL SHUT DOWNS WITH THE OWNER 72 HOURS PRIOR TO SHUT DOWN.

(F) DEMOLITION NOTES:

A. REMOVE ALL ELECTRICAL DEVICES ON WALLS TO BE DEMOLISHED (LIGHTING, POWER, FIRE ALARM, P.A., ETC.) INCLUDING CEILING MOUNTED LIGHTING. MAINTAIN BRANCH CIRCUIT SERVING LIGHTING FOR CONNECTION TO NEW LIGHTING. ANY DEVICE LOCATED ON WALL(S) NOT TO BE DEMOLISHED IS TO REMAIN (WALLS TO BE DEMOLISHED ARE SHOWN AS DASHED).

B. REMOVE LIGHT FIXTURES, SWITCH, AND COVERPLATE COMPLETE. LIGHTING BRANCH CIRCUIT SERVING ROOM SHALL REMAIN FOR REUSE.

C. REMOVE LIGHT FIXTURES COMPLETE. EXISTING LIGHTING BRANCH CIRCUIT TO REMAIN FOR REUSE.

D. ALTERNATE E2BV: REMOVE IN ROOM SOUND SYSTEM COMPLETE. REMOVE ASSOCIATED SPEAKERS, CABLING, AND CONDUIT AS REQUIRED.

E. MECHANICAL EQUIPMENT TO BE REMOVED. DISCONNECT ASSOCIATED BRANCH CIRCUIT AND/OR FEEDER AS REQUIRED. FEEDER/BRANCH CIRCUIT TO REMAIN FOR REUSE.

F. MECHANICAL EQUIPMENT TO BE REMOVED. DISCONNECT ASSOCIATE BRANCH CIRCUIT AND/OR FEEDER AS REQUIRED AND REMOVE COMPLETE BACK TO SOURCE (CONDUIT AND WIRE). REMOVE ASSOCIATED STARTER AND/OR DISCONNECT SWITCH AS REQUIRED.

G. REMOVE RECEPTACLE AND COVER PLATE. BACK BOX AND BRANCH CIRCUIT TO REMAIN FOR REUSE.

H. REMOVE PA SYSTEM COMPLETE. REMOVE ALL SPEAKERS, INTERCOM CALL BUTTONS, ACCESSORIES, AND CABLING COMPLETE. RACEWAYS AND BACK BOXES MAY BE LEFT FOR REUSE WHERE NEW EQUIPMENT IS BEING INSTALLED. COORDINATE LOCATIONS OF NEW EQUIPMENT WITH E3 SERIES DRAWINGS.

ELECTRICAL DEMOLITION PLAN - AREA 'A'

SCALE: 1/8" = 1' - 0"

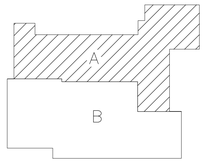

KEY PLAN

WAKELY ASSOCIATES, INC.
ARCHITECTS & ENGINEERS

30500 VAN DYKE AVE.
SUITE M-7
WARREN, MICHIGAN, 48093

TEL. 586-573-4100
FAX. 586-573-0822
E-MAIL: WA@WAKELYAIA.COM

Peter Basso Associates Inc
CONSULTING ENGINEERS
5145 Livernois, Suite 100
Troy, Michigan 48098-3276
Tel: 248-879-5668
Fax: 248-879-0007
www.PeterBassoAssociates.com
PBA Project No.: 2015-0144

FARMINGTON PUBLIC SCHOOLS - 2015 BOND
2018 PROJECTS
KENBROOK & BEECHVIEW ELEMENTARY SCHOOLS

BEECHVIEW ELEMENTARY SCHOOL

ELECTRICAL DEMOLITION PLAN - AREA 'A'

PRELIMINARY ☐
DESIGN DEVELOPMENT ☐
CONSTRUCTION ■
FINAL RECORD ☐

DRAWN BY: JRD
CHECKED BY: GJZ

REVISIONS:

DATE: 12-15-17

SHEET NO.: ED1.1BV

JOB NO.: 171712A

g:\2015\2015-0144-00\Cad\beechview es\2015-0144-BV-ED1-DP1.dwg, ED1.1BV, 12/12/2017 2:28:58 PM, Suha A. Matti, _Default.pc3 ,0.09094, Peter Basso Associates Inc.

THE FOLLOWING DIMENSION EQUALS ONE INCH WHEN PRINTED TO SCALE. 1"

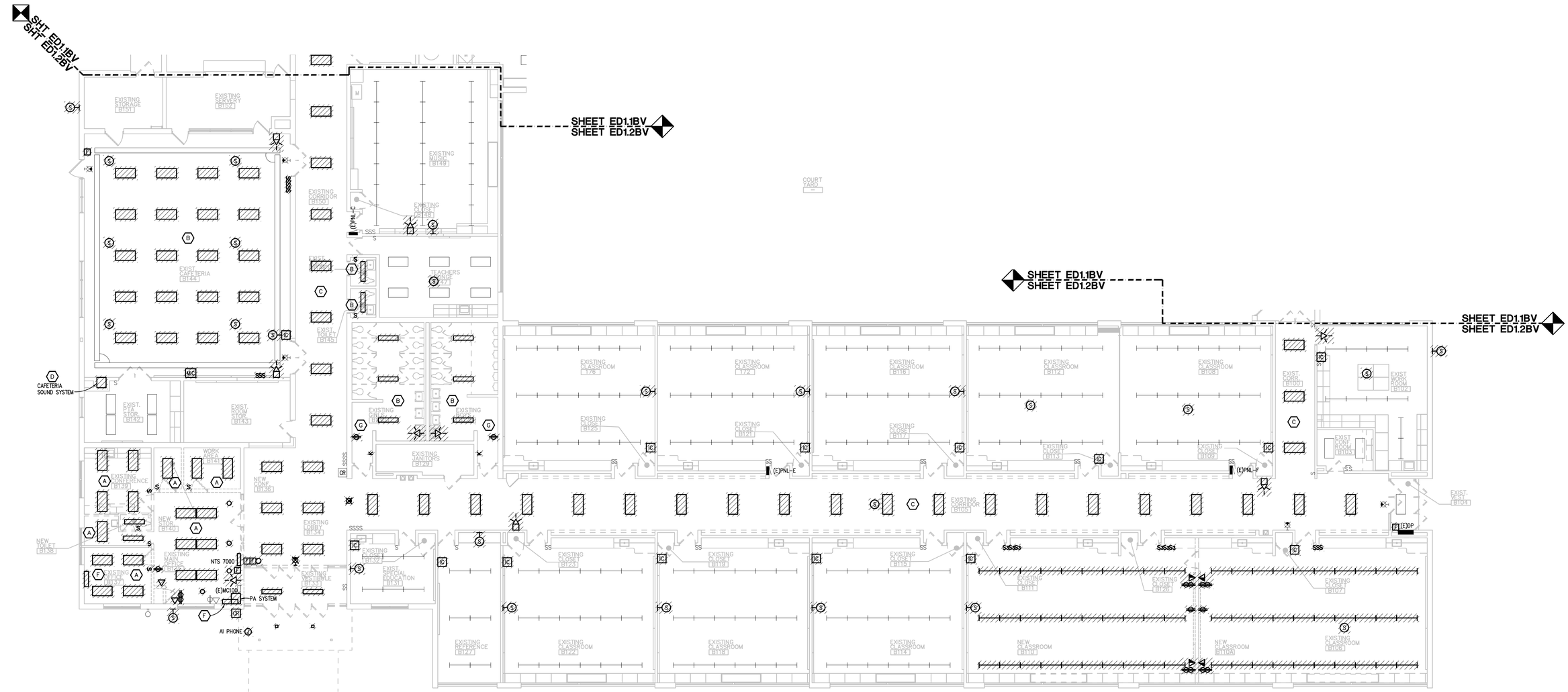

ELECTRICAL DEMOLITION PLAN - AREA 'B'

SCALE: 1/8" = 1' - 0"

GENERAL NOTES:

1. VISIT THE SITE PRIOR TO SUBMISSION OF BID TO EXAMINE THE EXISTING CONDITIONS AND THE EXTENT OF DEMOLITION WORK.
2. EXAMINE THE DRAWINGS OF OTHER TRADES AND BE FAMILIAR WITH THE DEMOLITION REQUIRED BY OTHER TRADES. PERFORM ALL INCIDENTAL ELECTRICAL DEMOLITION AND/OR RELOCATION REQUIRED TO FACILITATE THE DEMOLITION WORK OF OTHER TRADES, WHETHER OR NOT SPECIFICALLY INDICATED.
3. REMOVE LIGHTING FIXTURES AND ELECTRICAL DEVICES AS INDICATED ON PLAN WITH CROSS HATCHING. DEMOLITION SHALL INCLUDE, BUT NOT BE LIMITED TO, THOSE DEVICES SHOWN.
4. COORDINATE WITH NEW WORK PLANS, ONE LINE DIAGRAMS AND RISER DIAGRAMS FOR EXTENT OF DEMOLITION WORK.
5. PROVIDE PROPER SUPPORT FOR EXISTING TO REMAIN CONDUITS AND BOXES WHERE EXISTING SUPPORT IS TO BE REMOVED. RE-ROUTE BRANCH CIRCUIT CONDUITS AND RELOCATE JUNCTION BOXES AS REQUIRED TO FACILITATE INSTALLATION OF NEW EQUIPMENT AND SYSTEMS IN CEILING SPACES.
6. REMOVE ALL CONDUIT AND WIRE BACK TO THE SOURCE OR NEAREST UPSTREAM DEVICE REMAINING IN SERVICE.
7. MAINTAIN ELECTRICAL SERVICE TO ALL LIGHTING FIXTURES, DEVICES AND EQUIPMENT THAT ARE TO REMAIN. EXTEND CONDUIT AND WIRE AS REQUIRED WHERE DEMOLITION WORK AFFECTS ELECTRICAL SERVICE TO DOWNSTREAM LOADS THAT ARE TO REMAIN.
8. DISPOSE OF ALL MATERIALS OFF SITE AND INCLUDE ALL COSTS FOR DISPOSAL IN BID. ALL MATERIALS SHALL BE DISPOSED OF IN ACCORDANCE WITH ALL FEDERAL, STATE, AND LOCAL REGULATIONS, INCLUDING TCLP TESTING, PROPER DISPOSAL AND/OR RECYCLING OF FLUORESCENT LAMPS.
9. PROVIDE BLANK COVER PLATES WHERE SWITCHES AND DEVICES ARE REMOVED BUT EXISTING WALLS REMAIN INTACT.
10. RING OUT AND TAG ALL CIRCUITS AFFECTED BY THIS ALTERATION AT BOTH ENDS. MARK ALL UNUSED CIRCUIT BREAKERS "SPARE".
11. PROVIDE UPDATED TYPED-IN DIRECTORIES FOR ALL PANELS AFFECTED BY THIS ALTERATION.
12. VERIFY ALL UNDERGROUND AND IN SLAB UTILITY LOCATIONS PRIOR TO SAW-CUTTING OR PENETRATING ANY FLOOR SLAB.
13. COORDINATE ANY SHUT DOWN OF EXISTING SERVICES AND EQUIPMENT THAT ARE REMAINING IN USE WITH THE OWNER'S REPRESENTATIVE. WHERE EXISTING BUILDING SERVICE IS REQUIRED TO BE SHUT DOWN, INCLUDE ALL ASSOCIATED OVERTIME COSTS TO PERFORM THIS WORK DURING WEEKENDS AND EVENINGS INCLUDE ALL COSTS FOR PROVIDING TEMPORARY POWER WHERE SHUT DOWNS MUST OCCUR FOR PERIODS LONGER THAN THESE HOURS. COORDINATE ELECTRICAL SHUT DOWNS WITH THE OWNER 72 HOURS PRIOR TO SHUT DOWN.

(#) DEMOLITION NOTES:

A. REMOVE ALL ELECTRICAL DEVICES ON WALLS TO BE DEMOLISHED (LIGHTING, POWER, FIRE ALARM, P.A., ETC.) INCLUDING CEILING MOUNTED LIGHTING. MAINTAIN BRANCH CIRCUIT SERVING LIGHTING FOR CONNECTION TO NEW LIGHTING. ANY DEVICE LOCATED ON WALL(S) NOT TO BE DEMOLISHED IS TO REMAIN (WALLS TO BE DEMOLISHED ARE SHOWN AS DASHED).

B. REMOVE LIGHT FIXTURES, SWITCH, AND COVERPLATE COMPLETE. LIGHTING BRANCH CIRCUIT SERVING ROOM SHALL REMAIN FOR REUSE.

C. REMOVE LIGHT FIXTURES COMPLETE. EXISTING LIGHTING BRANCH CIRCUIT TO REMAIN FOR REUSE.

D. ALTERNATE E2BV: REMOVE IN ROOM SOUND SYSTEM COMPLETE. REMOVE ASSOCIATED SPEAKERS, CABLING, AND CONDUIT AS REQUIRED.

E. MECHANICAL EQUIPMENT TO BE REMOVED. DISCONNECT ASSOCIATED BRANCH CIRCUIT AND/OR FEEDER AS REQUIRED. FEEDER/BRANCH CIRCUIT TO REMAIN FOR REUSE.

F. MECHANICAL EQUIPMENT TO BE REMOVED. DISCONNECT ASSOCIATE BRANCH CIRCUIT AND/OR FEEDER AS REQUIRED AND REMOVE COMPLETE BACK TO SOURCE (CONDUIT AND WIRE). REMOVE ASSOCIATED STARTER AND/OR DISCONNECT SWITCH AS REQUIRED.

G. REMOVE RECEPTACLE AND COVER PLATE. BACK BOX AND BRANCH CIRCUIT TO REMAIN FOR REUSE.

H. REMOVE PA SYSTEM COMPLETE. REMOVE ALL SPEAKERS, INTERCOM CALL BUTTONS, ACCESSORIES, AND CABLING COMPLETE. RACEWAYS AND BACK BOXES MAY BE LEFT FOR REUSE WHERE NEW EQUIPMENT IS BEING INSTALLED. COORDINATE LOCATIONS OF NEW EQUIPMENT WITH E3 SERIES DRAWINGS.

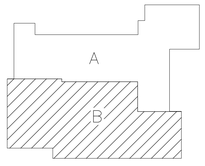

KEY PLAN

WAKELY ASSOCIATES, INC.
ARCHITECTS & ENGINEERS

30500 VAN DYKE AVE.
SUITE M-7
WARREN, MICHIGAN, 48093

TEL. 586-573-4100
FAX. 586-573-0822
E-MAIL: WA@WAKELYAIA.COM

Peter Basso Associates Inc
CONSULTING ENGINEERS
5145 Livernois, Suite 100
Troy, Michigan 48098-3276
Tel: 248-879-5668
Fax: 248-879-0007
www.PeterBassoAssociates.com
PBA Project No.: 2015-0144

FARMINGTON PUBLIC SCHOOLS - 2015 BOND
2018 PROJECTS
KENBROOK & BEECHVIEW ELEMENTARY SCHOOLS

BEECHVIEW ELEMENTARY SCHOOL

ELECTRICAL DEMOLITION PLAN - AREA 'B'

PRELIMINARY ☐
DESIGN DEVELOPMENT ☐
CONSTRUCTION ■
FINAL RECORD ☐

DRAWN BY: JRD
CHECKED BY: GJZ

REVISIONS:

DATE: 12-15-17

SHEET NO.: ED1.2BV

JOB NO.: 171712A

g:\2015\2015-0144-00\Cad\beechview es\2015-0144-BV-ED1-DP1.dwg, ED1.2BV, 12/12/2017 2:29:00 PM, Suha A. Matti, _Default.pc3 ,0.09094, Peter Basso Associates Inc.

THE FOLLOWING DIMENSION EQUALS ONE INCH WHEN PRINTED TO SCALE. 1"

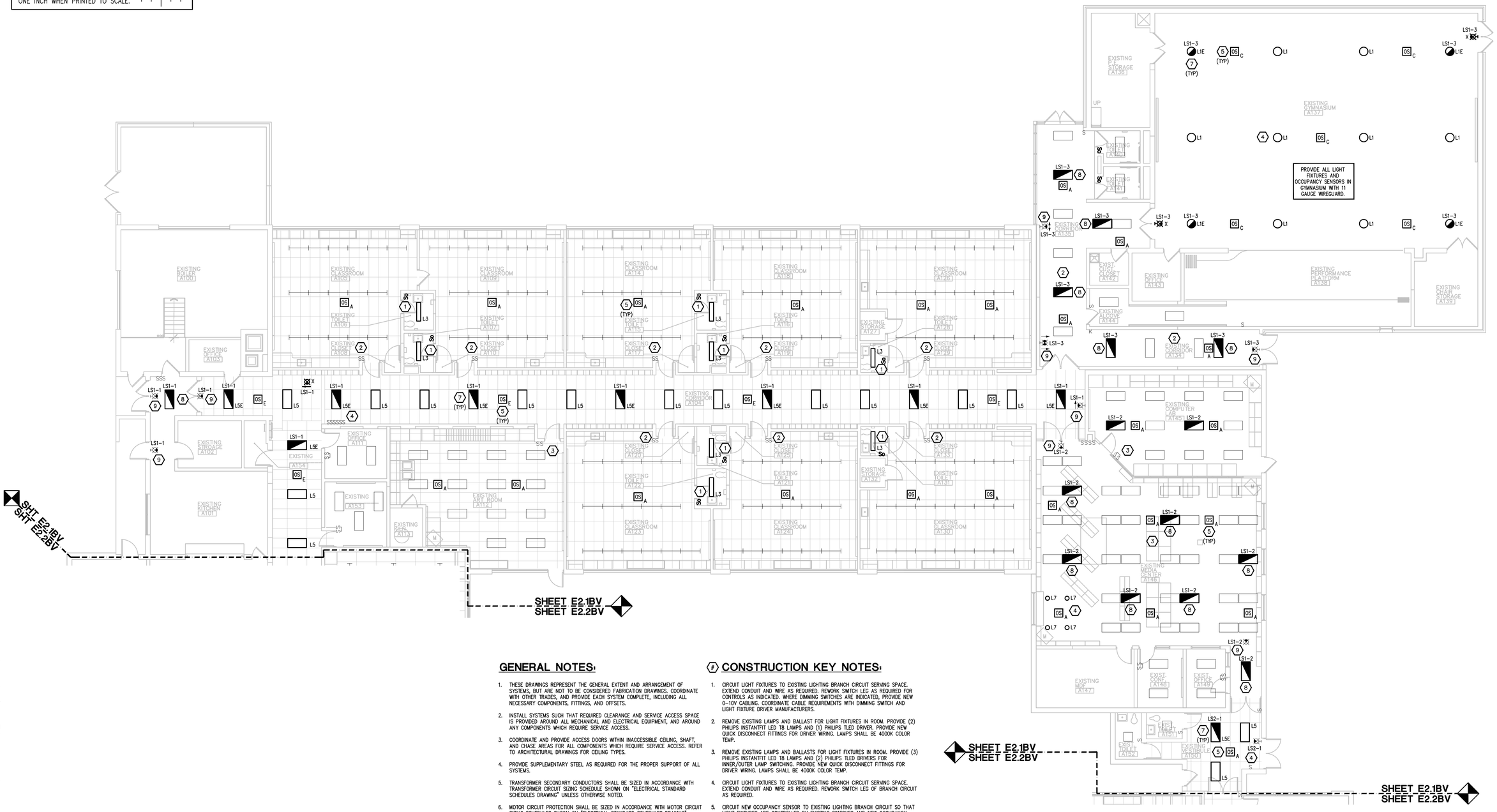

GENERAL NOTES:

1. THESE DRAWINGS REPRESENT THE GENERAL EXTENT AND ARRANGEMENT OF SYSTEMS, BUT ARE NOT TO BE CONSIDERED FABRICATION DRAWINGS. COORDINATE WITH OTHER TRADES, AND PROVIDE EACH SYSTEM COMPLETE, INCLUDING ALL NECESSARY COMPONENTS, FITTINGS, AND OFFSETS.
2. INSTALL SYSTEMS SUCH THAT REQUIRED CLEARANCE AND SERVICE ACCESS SPACE IS PROVIDED AROUND ALL MECHANICAL AND ELECTRICAL EQUIPMENT, AND AROUND ANY COMPONENTS WHICH REQUIRE SERVICE ACCESS.
3. COORDINATE AND PROVIDE ACCESS DOORS WITHIN INACCESSIBLE CEILING, SHAFT, AND CHASE AREAS FOR ALL COMPONENTS WHICH REQUIRE SERVICE ACCESS. REFER TO ARCHITECTURAL DRAWINGS FOR CEILING TYPES.
4. PROVIDE SUPPLEMENTARY STEEL AS REQUIRED FOR THE PROPER SUPPORT OF ALL SYSTEMS.
5. TRANSFORMER SECONDARY CONDUCTORS SHALL BE SIZED IN ACCORDANCE WITH TRANSFORMER CIRCUIT SIZING SCHEDULE SHOWN ON "ELECTRICAL STANDARD SCHEDULES DRAWING" UNLESS OTHERWISE NOTED.
6. MOTOR CIRCUIT PROTECTION SHALL BE SIZED IN ACCORDANCE WITH MOTOR CIRCUIT SIZING SCHEDULES SHOWN ON "ELECTRICAL STANDARD SCHEDULES DRAWING" UNLESS OTHERWISE NOTED.
7. COORDINATE THE MOUNTING HEIGHTS OF DEVICES WITH ARCHITECTURAL ELEVATIONS AND THE TRADES INSTALLING THE WORK.
8. COORDINATE EXACT LOCATIONS OF ALL FLOOR BOXES WITH FINAL FURNITURE LAYOUT DRAWINGS.
9. REFER TO MECHANICAL SCHEDULE SHEETS FOR ELECTRICAL REQUIREMENTS FOR MECHANICAL EQUIPMENT. PROVIDE ALL CONNECTIONS, STARTERS, DISCONNECTS, ETC. AS REQUIRED BY SCHEDULES AND WHERE NOTED ELSEWHERE. VERIFY REQUIREMENTS OF ALL MECHANICAL EQUIPMENT WITH SHOP DRAWINGS SUBMITTALS. NOTIFY ENGINEER OF ANY CONFLICTS BETWEEN EQUIPMENT SUBMITTALS AND ELECTRICAL DRAWINGS. WHERE CIRCUIT SIZES ARE SHOWN ON THE ELECTRICAL DRAWINGS THAT DIFFER FROM WHAT IS INDICATED ON THE MECHANICAL SCHEDULES, PROVIDE THE CIRCUIT OF HIGHER AMPACITY.
10. REFER TO TEMPERATURE CONTROLS SHEETS FOR REQUIRED MOTOR CONTROLLERS. PROVIDE ALL ACCESSORIES INDICATED.
11. PROVIDE THE DESIGN AND INSTALLATION FOR A COMPLETE AND FUNCTIONAL FIRE ALARM SYSTEM IN ACCORDANCE WITH SPECIFICATIONS, DRAWINGS, AND ALL APPLICABLE CODES. THE FIRE ALARM VENDOR SHALL PROVIDE LAYOUT DRAWINGS INDICATING THE REQUIRED QUANTITIES AND LOCATIONS OF MANUAL PULL STATIONS, NOTIFICATION APPLIANCES, SMOKE AND HEAT DETECTORS, CONTROL MODULES, INTERFACE MODULES, MODULES FOR SPRINKLER FLOW AND TAMPER SWITCHES, ALL CONTROL PANELS, POWER SUPPLIES, ADDITIONAL DEVICES AND EQUIPMENT REQUIRED. COORDINATE LOCATIONS OF DEVICES WITH ARCHITECTURAL FINISHES AND REFLECTED CEILING PLANS, INCLUDING ADDITIONAL SMOKE AND HEAT DETECTORS REQUIRED FOR NON-SMOOTH CEILING APPLICATIONS. INCLUDE ALLOWANCES FOR ADJUSTMENT OF DEVICES BY THE ARCHITECT AT THE TIME OF SUBMITTAL TO COORDINATE WITH BUILDING FINISHES AND OTHER CEILING ELEMENTS.
12. CIRCUIT EXIT SIGNS UNSWITCHED TO HOT LEG OF LIGHTING BRANCH CIRCUIT SERVING SPACE. ALTERNATE E1BV: CIRCUIT EXIT SIGN TO NEW EMERGENCY LIGHTING BRANCH CIRCUIT AS INDICATED.
13. IN SPACES INDICATED TO RECEIVE NEW LIGHTING. PROVIDE OCCUPANCY/VACANCY/PHOTOCELL CONTROL AS REQUIRED TO COMPLY WITH ASHRAE 90.1-2013. REVISE CIRCUITING AS REQUIRED FOR NEW CONTROLS.
14. EXTEND EXISTING CIRCUIT GROUND AS REQUIRED PER NEC WHERE NEW LIGHTING IS BEING INSTALLED OR EXISTING LIGHTING IS BEING REMOVED AND REINSTALLED.

(#) CONSTRUCTION KEY NOTES:

1. CIRCUIT LIGHT FIXTURES TO EXISTING LIGHTING BRANCH CIRCUIT SERVING SPACE. EXTEND CONDUIT AND WIRE AS REQUIRED. REWORK SWITCH LEG AS REQUIRED FOR CONTROLS AS INDICATED. WHERE DIMMING SWITCHES ARE INDICATED, PROVIDE NEW 0-10V CABLING. COORDINATE CABLE REQUIREMENTS WITH DIMMING SWITCH AND LIGHT FIXTURE DRIVER MANUFACTURERS.
2. REMOVE EXISTING LAMPS AND BALLAST FOR LIGHT FIXTURES IN ROOM. PROVIDE (2) PHILIPS INSTANTFIT LED T8 LAMPS AND (1) PHILIPS TLED DRIVER. PROVIDE NEW QUICK DISCONNECT FITTINGS FOR DRIVER WIRING. LAMPS SHALL BE 4000K COLOR TEMP.
3. REMOVE EXISTING LAMPS AND BALLASTS FOR LIGHT FIXTURES IN ROOM. PROVIDE (3) PHILIPS INSTANTFIT LED T8 LAMPS AND (2) PHILIPS TLED DRIVERS FOR INNER/OUTER LAMP SWITCHING. PROVIDE NEW QUICK DISCONNECT FITTINGS FOR DRIVER WIRING. LAMPS SHALL BE 4000K COLOR TEMP.
4. CIRCUIT LIGHT FIXTURES TO EXISTING LIGHTING BRANCH CIRCUIT SERVING SPACE. EXTEND CONDUIT AND WIRE AS REQUIRED. REWORK SWITCH LEG OF BRANCH CIRCUIT AS REQUIRED.
5. CIRCUIT NEW OCCUPANCY SENSOR TO EXISTING LIGHTING BRANCH CIRCUIT SO THAT LIGHT FIXTURES ARE CONTROLLED BY EXISTING SWITCHES AND NEW OCCUPANCY SENSOR. REWORK SWITCH LEG AS REQUIRED.
6. REFER TO TYPICAL CLASSROOM LIGHTING CONTROL DETAIL FOR REQUIREMENTS OF NEW LIGHTING CONTROLS.
7. BASE BID: PROVIDE NEW LIGHT FIXTURE WITH EMERGENCY BATTERY BACKUP BALLAST.

   ALTERNATE E1BV: PROVIDE EMERGENCY LOAD TRANSFER DEVICE (ELTD) AND EMERGENCY BRANCH CIRCUIT AS INDICATED FOR EMERGENCY LIGHT FIXTURE. PROVIDE (1) ELTD PER SWITCHED CIRCUIT. CIRCUIT NORMAL SIDE OF ELTD TO EXISTING LIGHTING BRANCH CIRCUIT SERVING SPACE.
8. BASE BID: NO SCOPE.

   ALTERNATE E1BV: PROVIDE EMERGENCY LOAD TRANSFER DEVICE (ELTD) AND EMERGENCY BRANCH CIRCUIT AS INDICATED FOR EMERGENCY LIGHT FIXTURE. PROVIDE (1) ELTD PER SWITCHED CIRCUIT. CIRCUIT NORMAL SIDE OF ELTD TO EXISTING LIGHTING BRANCH CIRCUIT SERVING SPACE.
9. BASE BID: NO SCOPE.

   ALTERNATE E1BV: REMOVE EXISTING EXIT SIGN AND AND BRANCH CIRCUIT COMPLETE (CONDUIT AND WIRE). PROVIDE NEW EXIT SIGN (FIXTURE TYPE "X"). CIRCUIT UNSWITCHED TO NEW EMERGENCY LIGHTING BRANCH CIRCUIT AS INDICATED.

LIGHTING NEW WORK PLAN - AREA 'A'

SCALE: 1/8" = 1' - 0"

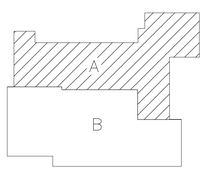

KEY PLAN

WAKELY ASSOCIATES, INC.
ARCHITECTS & ENGINEERS

30500 VAN DYKE AVE.
SUITE M-7
WARREN, MICHIGAN, 48093

TEL. 586-573-4100
FAX. 586-573-0822
E-MAIL: WA@WAKELYAIA.COM

Peter Basso Associates Inc
CONSULTING ENGINEERS
5145 Livernois, Suite 100
Troy, Michigan 48098-3276
Tel: 248-879-5668
Fax: 248-879-0007
www.PeterBassoAssociates.com
PBA Project No.: 2015-0144

FARMINGTON PUBLIC SCHOOLS - 2015 BOND
2018 PROJECTS
KENBROOK & BEECHVIEW ELEMENTARY SCHOOLS

BEECHVIEW ELEMENTARY SCHOOL

LIGHTING NEW WORK PLAN - AREA 'A'

PRELIMINARY ☐
DESIGN DEVELOPMENT ☐
CONSTRUCTION ■
FINAL RECORD ☐

DRAWN BY: JRD
CHECKED BY: GJZ

REVISIONS:

DATE: 12-15-17

SHEET NO.: E2.1BV

JOB NO.: 171712A

g:\2015\2015-0144-00\Cad\beechview es\2015-0144-BV-E2-LP1.dwg, E2.1BV, 12/12/2017 2:29:13 PM, Suha A. Matti, _Default.pc3 ,0.09094, Peter Basso Associates Inc.

THE FOLLOWING DIMENSION EQUALS ONE INCH WHEN PRINTED TO SCALE. 1"

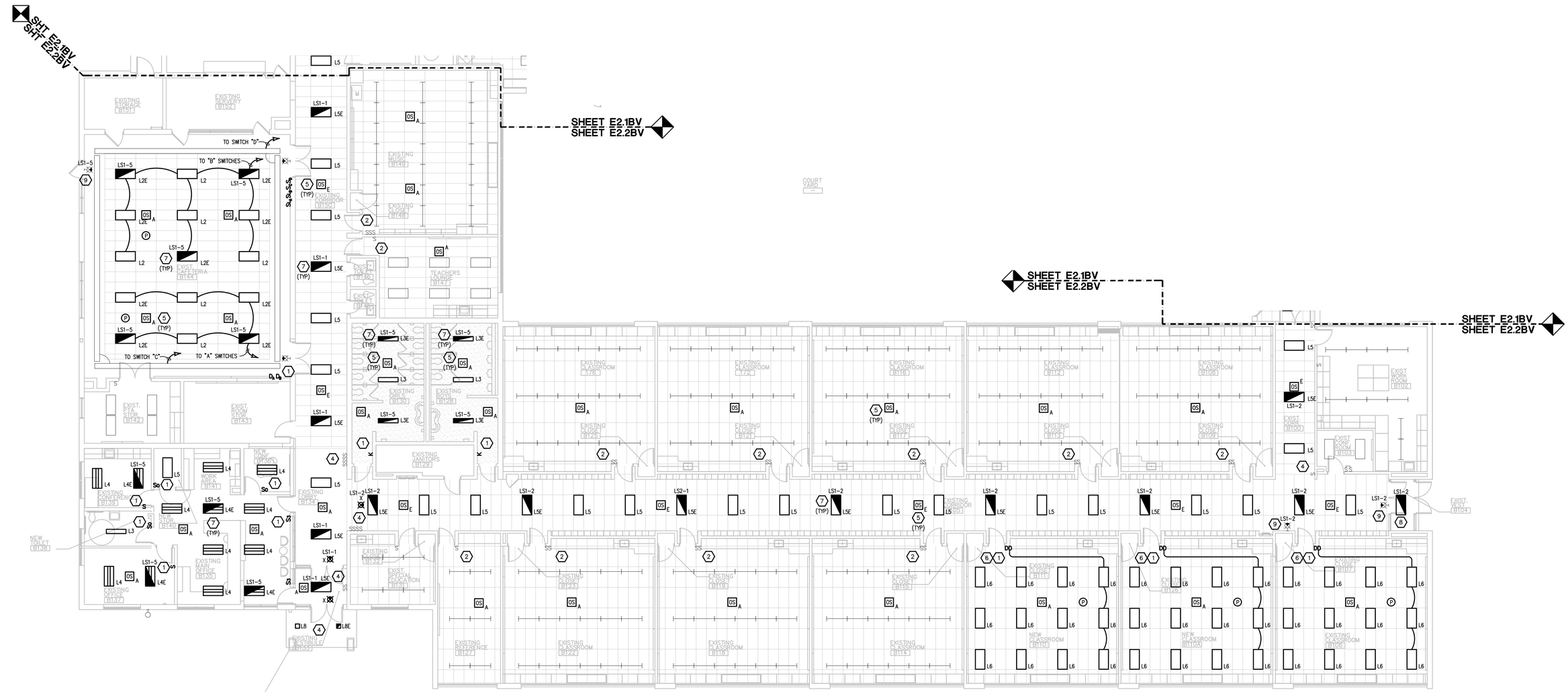

LIGHTING NEW WORK PLAN - AREA 'B'

SCALE: 1/8" = 1' - 0"

GENERAL NOTES:

1. THESE DRAWINGS REPRESENT THE GENERAL EXTENT AND ARRANGEMENT OF SYSTEMS, BUT ARE NOT TO BE CONSIDERED FABRICATION DRAWINGS. COORDINATE WITH OTHER TRADES, AND PROVIDE EACH SYSTEM COMPLETE, INCLUDING ALL NECESSARY COMPONENTS, FITTINGS, AND OFFSETS.
2. INSTALL SYSTEMS SUCH THAT REQUIRED CLEARANCE AND SERVICE ACCESS SPACE IS PROVIDED AROUND ALL MECHANICAL AND ELECTRICAL EQUIPMENT, AND AROUND ANY COMPONENTS WHICH REQUIRE SERVICE ACCESS.
3. COORDINATE AND PROVIDE ACCESS DOORS WITHIN INACCESSIBLE CEILING, SHAFT, AND CHASE AREAS FOR ALL COMPONENTS WHICH REQUIRE SERVICE ACCESS. REFER TO ARCHITECTURAL DRAWINGS FOR CEILING TYPES.
4. PROVIDE SUPPLEMENTARY STEEL AS REQUIRED FOR THE PROPER SUPPORT OF ALL SYSTEMS.
5. TRANSFORMER SECONDARY CONDUCTORS SHALL BE SIZED IN ACCORDANCE WITH TRANSFORMER CIRCUIT SIZING SCHEDULE SHOWN ON "ELECTRICAL STANDARD SCHEDULES DRAWING" UNLESS OTHERWISE NOTED.
6. MOTOR CIRCUIT PROTECTION SHALL BE SIZED IN ACCORDANCE WITH MOTOR CIRCUIT SIZING SCHEDULES SHOWN ON "ELECTRICAL STANDARD SCHEDULES DRAWING" UNLESS OTHERWISE NOTED.
7. COORDINATE THE MOUNTING HEIGHTS OF DEVICES WITH ARCHITECTURAL ELEVATIONS AND THE TRADES INSTALLING THE WORK.
8. COORDINATE EXACT LOCATIONS OF ALL FLOOR BOXES WITH FINAL FURNITURE LAYOUT DRAWINGS.
9. REFER TO MECHANICAL SCHEDULE SHEETS FOR ELECTRICAL REQUIREMENTS FOR MECHANICAL EQUIPMENT. PROVIDE ALL CONNECTIONS, STARTERS, DISCONNECTS, ETC. AS REQUIRED BY SCHEDULES AND WHERE NOTED ELSEWHERE. VERIFY REQUIREMENTS OF ALL MECHANICAL EQUIPMENT WITH SHOP DRAWINGS SUBMITTALS. NOTIFY ENGINEER OF ANY CONFLICTS BETWEEN EQUIPMENT SUBMITTALS AND ELECTRICAL DRAWINGS. WHERE CIRCUIT SIZES ARE SHOWN ON THE ELECTRICAL DRAWINGS THAT DIFFER FROM WHAT IS INDICATED ON THE MECHANICAL SCHEDULES, PROVIDE THE CIRCUIT OF HIGHER AMPACITY.
10. REFER TO TEMPERATURE CONTROLS SHEETS FOR REQUIRED MOTOR CONTROLLERS. PROVIDE ALL ACCESSORIES INDICATED.
11. PROVIDE THE DESIGN AND INSTALLATION FOR A COMPLETE AND FUNCTIONAL FIRE ALARM SYSTEM IN ACCORDANCE WITH SPECIFICATIONS, DRAWINGS, AND ALL APPLICABLE CODES. THE FIRE ALARM VENDOR SHALL PROVIDE LAYOUT DRAWINGS INDICATING THE REQUIRED QUANTITIES AND LOCATIONS OF MANUAL PULL STATIONS, NOTIFICATION APPLIANCES, SMOKE AND HEAT DETECTORS, CONTROL MODULES, INTERFACE MODULES, MODULES FOR SPRINKLER FLOW AND TAMPER SWITCHES, ALL CONTROL PANELS, POWER SUPPLIES, ADDITIONAL DEVICES AND EQUIPMENT REQUIRED. COORDINATE LOCATIONS OF DEVICES WITH ARCHITECTURAL FINISHES AND REFLECTED CEILING PLANS, INCLUDING ADDITIONAL SMOKE AND HEAT DETECTORS REQUIRED FOR NON-SMOOTH CEILING APPLICATIONS. INCLUDE ALLOWANCES FOR ADJUSTMENT OF DEVICES BY THE ARCHITECT AT THE TIME OF SUBMITTAL TO COORDINATE WITH BUILDING FINISHES AND OTHER CEILING ELEMENTS.
12. CIRCUIT EXIT SIGNS UNSWITCHED TO HOT LEG OF LIGHTING BRANCH CIRCUIT SERVING SPACE. ALTERNATE E1BV: CIRCUIT EXIT SIGN TO NEW EMERGENCY LIGHTING BRANCH CIRCUIT AS INDICATED.
13. IN SPACES INDICATED TO RECEIVE NEW LIGHTING. PROVIDE OCCUPANCY/VACANCY/PHOTOCELL CONTROL AS REQUIRED TO COMPLY WITH ASHRAE 90.1-2013. REVISE CIRCUITING AS REQUIRED FOR NEW CONTROLS.

CONSTRUCTION KEY NOTES:

1. CIRCUIT LIGHT FIXTURES TO EXISTING LIGHTING BRANCH CIRCUIT SERVING SPACE. EXTEND CONDUIT AND WIRE AS REQUIRED. REWORK SWITCH LEG AS REQUIRED FOR CONTROLS AS INDICATED. WHERE DIMMING SWITCHES ARE INDICATED, PROVIDE NEW 0-10V CABLING. COORDINATE CABLE REQUIREMENTS WITH DIMMING SWITCH AND LIGHT FIXTURE DRIVER MANUFACTURERS.
2. REMOVE EXISTING LAMPS AND BALLAST FOR LIGHT FIXTURES IN ROOM. PROVIDE (2) PHILIPS INSTANTFIT LED T8 LAMPS AND (1) PHILIPS TLED DRIVER. PROVIDE NEW QUICK DISCONNECT FITTINGS FOR DRIVER WIRING. LAMPS SHALL BE 4000K COLOR TEMP.
3. REMOVE EXISTING LAMPS AND BALLASTS FOR LIGHT FIXTURES IN ROOM. PROVIDE (3) PHILIPS INSTANTFIT LED T8 LAMPS AND (2) PHILIPS TLED DRIVERS FOR INNER/OUTER LAMP SWITCHING. PROVIDE NEW QUICK DISCONNECT FITTINGS FOR DRIVER WIRING. LAMPS SHALL BE 4000K COLOR TEMP.
4. CIRCUIT LIGHT FIXTURES TO EXISTING LIGHTING BRANCH CIRCUIT SERVING SPACE. EXTEND CONDUIT AND WIRE AS REQUIRED. REWORK SWITCH LEG OF BRANCH CIRCUIT AS REQUIRED.
5. CIRCUIT NEW OCCUPANCY SENSOR TO EXISTING LIGHTING BRANCH CIRCUIT SO THAT LIGHT FIXTURES ARE CONTROLLED BY EXISTING SWITCHES AND NEW OCCUPANCY SENSOR. REWORK SWITCH LEG AS REQUIRED.
6. REFER TO TYPICAL CLASSROOM LIGHTING CONTROL DETAIL FOR REQUIREMENTS OF NEW LIGHTING CONTROLS.
7. BASE BID: PROVIDE NEW LIGHT FIXTURE WITH EMERGENCY BATTERY BACKUP BALLAST.

   ALTERNATE E1BV: PROVIDE EMERGENCY LOAD TRANSFER DEVICE (ELTD) AND EMERGENCY BRANCH CIRCUIT AS INDICATED FOR EMERGENCY LIGHT FIXTURE. PROVIDE (1) ELTD PER SWITCHED CIRCUIT. CIRCUIT NORMAL SIDE OF ELTD TO EXISTING LIGHTING BRANCH CIRCUIT SERVING SPACE.
8. BASE BID: NO SCOPE.

   ALTERNATE E1BV: PROVIDE EMERGENCY LOAD TRANSFER DEVICE (ELTD) AND EMERGENCY BRANCH CIRCUIT AS INDICATED FOR EMERGENCY LIGHT FIXTURE. PROVIDE (1) ELTD PER SWITCHED CIRCUIT. CIRCUIT NORMAL SIDE OF ELTD TO EXISTING LIGHTING BRANCH CIRCUIT SERVING SPACE.
9. BASE BID: NO SCOPE.

   ALTERNATE E1BV: REMOVE EXISTING EXIT SIGN AND AND BRANCH CIRCUIT COMPLETE (CONDUIT AND WIRE). PROVIDE NEW EXIT SIGN (FIXTURE TYPE "X"). CIRCUIT UNSWITCHED TO NEW EMERGENCY LIGHTING BRANCH CIRCUIT AS INDICATED.

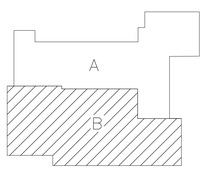

KEY PLAN

WAKELY ASSOCIATES, INC.
ARCHITECTS & ENGINEERS

30500 VAN DYKE AVE.
SUITE M-7
WARREN, MICHIGAN, 48093

TEL. 586-573-4100
FAX. 586-573-0822
E-MAIL: WA@WAKELYAIA.COM

Peter Basso Associates Inc
CONSULTING ENGINEERS
5145 Livernois, Suite 100
Troy, Michigan 48098-3276
Tel: 248-879-5668
Fax: 248-879-0007
www.PeterBassoAssoc.sites.com
PBA Project No.: 2015-0144

FARMINGTON PUBLIC SCHOOLS - 2015 BOND
2018 PROJECTS
KENBROOK & BEECHVIEW ELEMENTARY SCHOOLS

BEECHVIEW ELEMENTARY SCHOOL

LIGHTING NEW WORK PLAN - AREA 'B'

PRELIMINARY ☐
DESIGN DEVELOPMENT ☐
CONSTRUCTION ■
FINAL RECORD ☐

DRAWN BY: JRD
CHECKED BY: GJZ

REVISIONS:

DATE: 12-15-17

SHEET NO.: E2.2BV

JOB NO.: 171712A

g:\2015\2015-0144-00\Cad\beechview es\2015-0144-BV-E2-LP1.dwg, E2.2BV, 12/12/2017 2:29:15 PM, Suha A. Matti, _Default.pc3 ,0.09094, Peter Basso Associates Inc.

THE FOLLOWING DIMENSION EQUALS ONE INCH WHEN PRINTED TO SCALE.

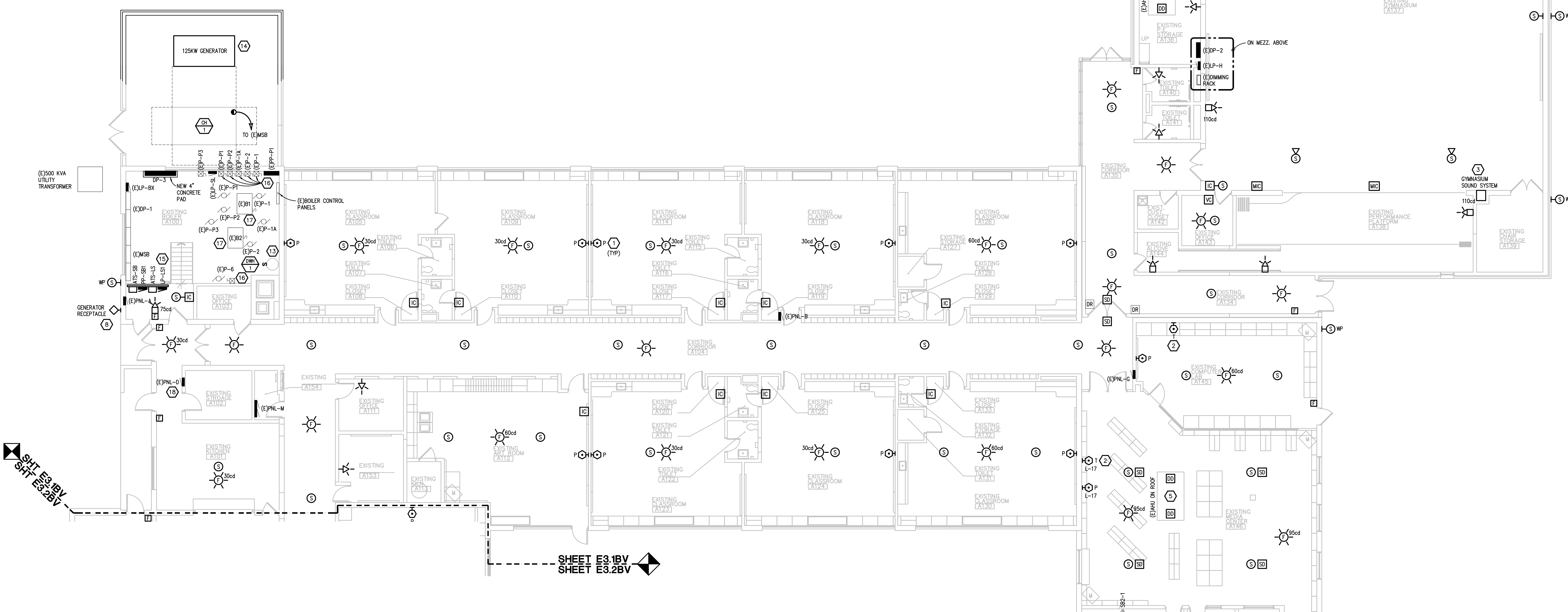

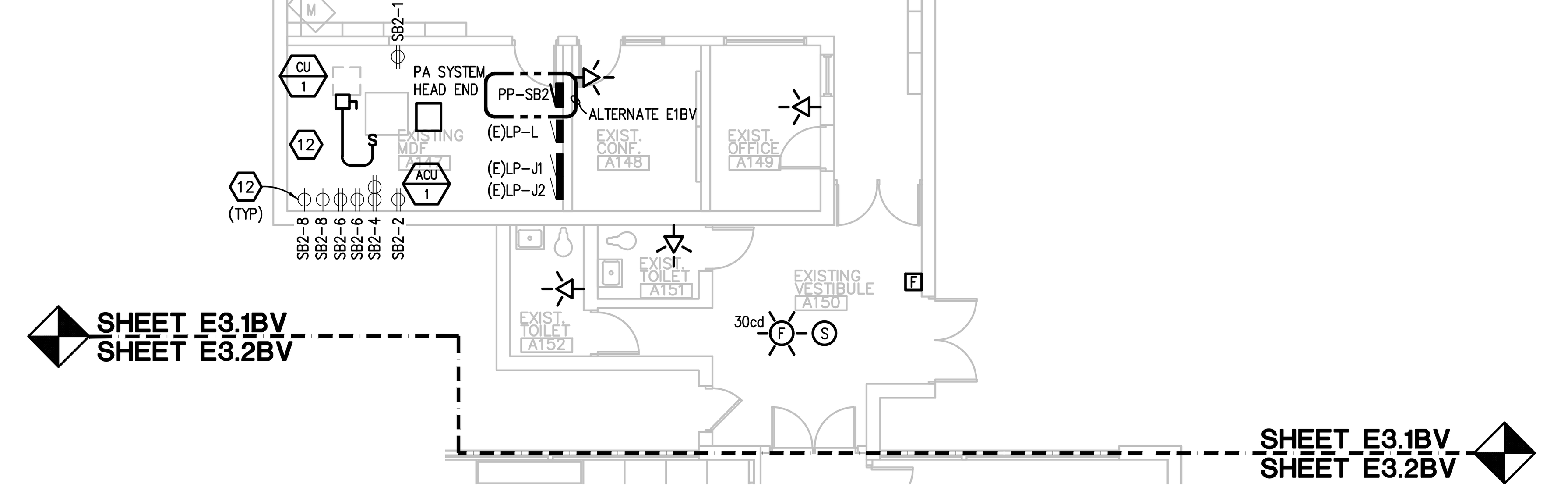

POWER NEW WORK PLAN - AREA 'A'

SCALE: 1/8" = 1' - 0"

GENERAL NOTES:

1. THESE DRAWINGS REPRESENT THE GENERAL EXTENT AND ARRANGEMENT OF SYSTEMS, BUT ARE NOT TO BE CONSIDERED FABRICATION DRAWINGS. COORDINATE WITH OTHER TRADES, AND PROVIDE EACH SYSTEM COMPLETE, INCLUDING ALL NECESSARY COMPONENTS, FITTINGS, AND OFFSETS.
2. INSTALL SYSTEMS SUCH THAT REQUIRED CLEARANCE AND SERVICE ACCESS SPACE IS PROVIDED AROUND ALL MECHANICAL AND ELECTRICAL EQUIPMENT, AND AROUND ANY COMPONENTS WHICH REQUIRE SERVICE ACCESS.
3. COORDINATE AND PROVIDE ACCESS DOORS WITHIN INACCESSIBLE CEILING, SHAFT, AND CHASE AREAS FOR ALL COMPONENTS WHICH REQUIRE SERVICE ACCESS. REFER TO ARCHITECTURAL DRAWINGS FOR CEILING TYPES.
4. PROVIDE SUPPLEMENTARY STEEL AS REQUIRED FOR THE PROPER SUPPORT OF ALL SYSTEMS.
5. TRANSFORMER SECONDARY CONDUCTORS SHALL BE SIZED IN ACCORDANCE WITH TRANSFORMER CIRCUIT SIZING SCHEDULE SHOWN ON "ELECTRICAL STANDARD SCHEDULES DRAWING" UNLESS OTHERWISE NOTED.
6. MOTOR CIRCUIT PROTECTION SHALL BE SIZED IN ACCORDANCE WITH MOTOR CIRCUIT SIZING SCHEDULES SHOWN ON "ELECTRICAL STANDARD SCHEDULES DRAWING" UNLESS OTHERWISE NOTED.
7. COORDINATE THE MOUNTING HEIGHTS OF DEVICES WITH ARCHITECTURAL ELEVATIONS AND THE TRADES INSTALLING THE WORK.
8. COORDINATE EXACT LOCATIONS OF ALL FLOOR BOXES WITH FINAL FURNITURE LAYOUT DRAWINGS.
9. REFER TO MECHANICAL SCHEDULE SHEETS FOR ELECTRICAL REQUIREMENTS FOR MECHANICAL EQUIPMENT. PROVIDE ALL CONNECTIONS, STARTERS, DISCONNECTS, ETC. AS REQUIRED BY SCHEDULES AND WHERE NOTED ELSEWHERE. VERIFY REQUIREMENTS OF ALL MECHANICAL EQUIPMENT WITH SHOP DRAWINGS SUBMITTALS. NOTIFY ENGINEER OF ANY CONFLICTS BETWEEN EQUIPMENT SUBMITTALS AND ELECTRICAL DRAWINGS. WHERE CIRCUIT SIZES ARE SHOWN ON THE ELECTRICAL DRAWINGS THAT DIFFER FROM WHAT IS INDICATED ON THE MECHANICAL SCHEDULES, PROVIDE THE CIRCUIT OF HIGHER AMPACITY.
10. REFER TO TEMPERATURE CONTROLS SHEETS FOR REQUIRED MOTOR CONTROLLERS. PROVIDE ALL ACCESSORIES INDICATED.
11. PROVIDE THE DESIGN AND INSTALLATION FOR A COMPLETE AND FUNCTIONAL FIRE ALARM SYSTEM IN ACCORDANCE WITH SPECIFICATIONS, DRAWINGS, AND ALL APPLICABLE CODES. THE FIRE ALARM VENDOR SHALL PROVIDE LAYOUT DRAWINGS INDICATING THE REQUIRED QUANTITIES AND LOCATIONS OF MANUAL PULL STATIONS, NOTIFICATION APPLIANCES, SMOKE AND HEAT DETECTORS, CONTROL MODULES, INTERFACE MODULES, MODULES FOR SPRINKLER FLOW AND TAMPER SWITCHES, ALL CONTROL PANELS, POWER SUPPLIES, ADDITIONAL DEVICES AND EQUIPMENT REQUIRED. COORDINATE LOCATIONS OF DEVICES WITH ARCHITECTURAL FINISHES AND REFLECTED CEILING PLANS, INCLUDING ADDITIONAL SMOKE AND HEAT DETECTORS REQUIRED FOR NON-SMOOTH CEILING APPLICATIONS. INCLUDE ALLOWANCES FOR ADJUSTMENT OF DEVICES BY THE ARCHITECT AT THE TIME OF SUBMITTAL TO COORDINATE WITH BUILDING FINISHES AND OTHER CEILING ELEMENTS.
12. CIRCUIT EXIT SIGNS UNSWITCHED TO HOT LEG OF LIGHTING BRANCH CIRCUIT SERVING SPACE. ALTERNATE E1BV: CIRCUIT EXIT SIGN TO NEW EMERGENCY LIGHTING BRANCH CIRCUIT AS INDICATED.
13. IN SPACES INDICATED TO RECEIVE NEW LIGHTING. PROVIDE OCCUPANCY/VACANCY/PHOTOCELL CONTROL AS REQUIRED TO COMPLY WITH ASHRAE 90.1-2013. REVISE CIRCUITING AS REQUIRED FOR NEW CONTROLS.
14. EXTEND EXISTING CIRCUIT GROUND AS REQUIRED PER NEC WHERE NEW LIGHTING IS BEING INSTALLED OR EXISTING LIGHTING IS BEING REMOVED AND REINSTALLED.

(#) CONSTRUCTION KEY NOTES:

1. REFER TO SHORT THROW PROJECTOR DETAIL ON E7 SERIES DRAWINGS FOR POWER AND DATA RACEWAY REQUIREMENTS AT NEW PROJECTOR. COORDINATE EXACT LOCATION WITH ARCHITECTURAL DRAWINGS AND TECHNOLOGY CONTRACTOR. WHERE NO CIRCUIT IS INDICATED, EXTEND EXISTING BRANCH CIRCUIT THAT PREVIOUSLY SERVED TELEVISION TO NEW PROJECTOR LOCATION.
2. REFER TO TEACHER STATION RACEWAY DETAIL ON E7 SERIES DRAWINGS FOR POWER AND DATA RACEWAY REQUIREMENTS AT TEACHER STATION. COORDINATE EXACT LOCATION WITH ARCHITECTURAL DRAWINGS AND TECHNOLOGY CONTRACTOR. CIRCUIT RECEPTACLES AS INDICATED.
3. ALTERNATE E2BV: PROVIDE NEW SOUND EQUIPMENT RACK. REFER TO DETAIL ON E7 SERIES DRAWINGS FOR REQUIREMENTS.
4. CIRCUIT NEW MECHANICAL EQUIPMENT TO EXISTING FEEDER AND/OR BRANCH CIRCUIT AS REQUIRED. EXTEND CONDUIT AND WIRE AS REQUIRED.
5. DUCT SMOKE DETECTORS. COORDINATE REQUIRED QUANTITIES AND MOUNTING LOCATIONS WITH EXISTING DUCT WORK TO MEED CODE. (PROVIDE 4 DUCT SMOKE DETECTORS PER AHU/RTU/AC FOR BID PURPOSES. QUANTITIES WILL BE ADJUSTED IN FIELD BAST ON EXISTING DUCT WORK PENETRATIONS AND ROUTING LOCATIONS). COORDINATE INSTALLATION WITH THE EXISTING MECHANICAL DUCT WORK SO THAT UPON DETECTION OF SMOKE, THE SUPPLY/RETURN FAN WILL SHUT DOWN. CONTRACTOR SHALL WIRE DUCT SMOKE DETECTOR TO FIRE ALARM SYSTEM. CONTROL OF AIR HANDLING EQUIPMENT IS VIA THE FIRE ALARM CONTROL PANEL. PROVIDE ALL REQUIRED FIRE ALARM CONTROL MODULES AND RELAYS TO INTERFACE WITH SUPPLY FAN AND ASSOCIATED RETURN FAN (OR EXHAUST FAN). PROVIDE ALL CONTROL MODULES, RELAYS, ETC. FOR A COMPLETE OPERATING SYSTEM.
6. CIRCUIT RECEPTACLE TO EXISTING BRANCH CIRCUIT. EXTEND CONDUIT AND WIRE AS REQUIRED.
7. PROVIDE 120V CIRCUIT IN CEILING SPACE FOR DOOR SECURITY AND CONTROLS AS INDICATED. FOR ALTERNATE E1BV, CIRCUIT DOOR HARDWARE POWER TO LP-SB1-28. REFER TO ARCHITECTURAL FLOOR PLANS, DOOR HARDWARE SCHEDULE ON ARCHITECTURAL DRAWINGS, ACCESS CONTROL SYSTEM SPECIFICATION SECTION, AND ACCESS CONTROL DOOR DIAGRAM(S) ON E7 SERIES DRAWINGS FOR RACEWAY AND BACK BOX REQUIREMENTS FOR DOOR OR BANK OF DOORS INDICATED. PROVIDE ALL RACEWAYS AND BACK BOXES REQUIRED. COORDINATE WITH DOOR HARDWARE CONTRACTOR. PROVIDE 1" CONDUIT FROM ARCHITECTURAL CASE WORK FOR DOOR RELEASE PUSH BUTTON TO ACCESSIBLE CEILING SPACE ABOVE DOORS FOR SECURITY DOOR RELEASE. COORDINATE LOCATION OF PUSH BUTTON WITH OWNER PRIOR TO INSTALLATION.
8. PROVIDE NEW RECEPTACLE FOR PORTABLE GENERATOR CONNECTION. REFER TO E5 SERIES DRAWINGS FOR REQUIREMENTS.
9. PROVIDE 2-GANG JUNCTION BOX WITH 3/4"C TO ABOVE ACCESSIBLE CEILING FOR CARD READER. PROVIDE CONDUIT WITH NYLON PULLSTRING. PROVIDE BLANK COVERPLATE AT JUNCTION BOX. COORDINATE EXACT LOCATION WITH ARCHITECTURAL TRADES.
10. PROVIDE 2-GANG JUNCTION BOX WITH 3/4"C TO ABOVE ACCESSIBLE CEILING FOR DOOR OPERATOR PUSHPAD. PROVIDE CONDUIT WITH NYLON PULLSTRING. PROVIDE BLANK COVERPLATE AT JUNCTION BOX. COORDINATE EXACT LOCATION WITH ARCHITECTURAL TRADES.
11. PROVIDE 2-GANG JUNCTION BOX WITH 3/4"C TO ABOVE ACCESSIBLE CEILING FOR AiPHONE. PROVIDE CONDUIT WITH NYLON PULLSTRING. PROVIDE BLANK COVERPLATE AT JUNCTION BOX. COORDINATE EXACT LOCATION WITH ARCHITECTURAL TRADE.
12. PROVIDE NEW 20A-2P CIRCUIT BREAKER AT EXISTING PANEL LP-L AND BRANCH CIRCUIT FOR NEW CONDENSING UNIT CU-1. ACU-1 SHALL BE POWERED FROM CU-1 AND IS RATED FOR 120V SINGLE PHASE POWER.
13. CIRCUIT NEW MECHANICAL EQUIPMENT TO EXISTING BRANCH CIRCUIT THAT SERVED PREVIOUS EQUIPMENT. EXTEND CONDUIT AND WIRE AS REQUIRED.
14. ALTERNATE E1BV: PROVIDE NEW GENERATOR. REFER TO NEW WORK ONE LINE DIAGRAM ON E5 SERIES DRAWINGS FOR REQUIREMENTS.
15. ALTERNATE E1BV: PROVIDE NEW TRANSFER SWITCHES AND PANELS AS INDICATED. PROVIDE NEW STRUCTURAL STEEL SUPPORT RACK FOR MOUNTING OF EQUIPMENT.
16. ALTERNATE E1BV: DISCONNECT FEEDER/BRANCH CIRCUIT FROM STARTER AND REMOVE COMPLETE (CONDUIT AND WIRE) BACK TO SOURCE. FEEDER FROM STARTER TO MOTOR TO REMAIN FOR REUSE. PROVIDE NEW BRANCH CIRCUIT (CONDUIT AND WIRE) FROM PANEL PP-SB1. REFER TO PANEL SCHEDULE ON E5 SERIES DRAWINGS AND SCHEDULES ON SHEET E0.2BV FOR CIRCUIT REQUIREMENTS.
17. ALTERNATE E1BV: DISCONNECT ASSOCIATED BRANCH CIRCUIT AT BOILER AND REMOVE COMPLETE (CONDUIT AND WIRE) BACK TO SOURCE. PROVIDE NEW BRANCH CIRCUIT (CONDUIT AND WIRE) FROM PANEL PP-SB1. REFER TO PANEL SCHEDULE ON E5 SERIES DRAWING AND SCHEDULES ON SHEET E0.2BV FOR CIRCUIT REQUIREMENTS.
18. ALTERNATE E1BV: DISCONNECT FEEDER FOR (E)PNL-D AND REMOVE COMPLETE (CONDUIT AND WIRE) BACK TO SOURCE. PROVIDE NEW FEEDER (CONDUIT AND WIRE) FROM PANEL PP-SB1. REFER TO PANEL SCHEDULE ON E5 SERIES DRAWINGS AND SCHEDULES ON SHEET E0.2BV FOR REQUIREMENTS.
19. ALTERNATE E1BV: RECIRCUIT EXISTING RECEPTACLE TO NEW BRANCH CIRCUIT AS INDICATED. REMOVE ABANDONED CONDUIT AND WIRE AS REQUIRED.
20. ALTERNATE E1BV: CIRCUIT NEW FIRE ALARM CONTROL PANEL TO CIRCUIT LP-LS1-2 INSTEAD OF NORMAL POWER CIRCUIT AS INDICATED.

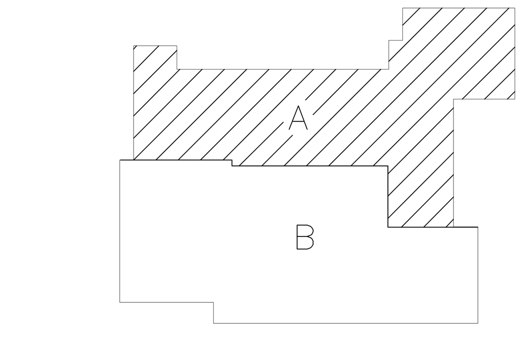

KEY PLAN

WAKELY ASSOCIATES, INC.
ARCHITECTS & ENGINEERS

30500 VAN DYKE AVE.
SUITE M-7
WARREN, MICHIGAN, 48093

TEL. 586-573-4100
FAX. 586-573-0822
E-MAIL: WA@WAKELYAIA.COM

Peter Basso Associates Inc
CONSULTING ENGINEERS
5145 Livernois, Suite 100
Troy, Michigan 48098-3276
Tel: 248-879-5666
Fax: 248-879-0007
www.PeterBassoAssociates.com
PBA Project No.: 2015-0144

FARMINGTON PUBLIC SCHOOLS - 2015 BOND
2018 PROJECTS
KENBROOK & BEECHVIEW ELEMENTARY SCHOOLS

BEECHVIEW ELEMENTARY SCHOOL

POWER NEW WORK PLAN - AREA 'A'

PRELIMINARY	☐
DESIGN DEVELOPMENT	☐
CONSTRUCTION	■
FINAL RECORD	☐
DRAWN BY:	JRD
CHECKED BY:	GJZ
REVISIONS:	
DATE:	12-15-17
SHEET NO.:	E3.1BV
JOB NO.:	171712A

g:\2015\2015-0144-00\Cad\beechview es\2015-0144-BV-E3-PP1.dwg, E3.1BV, 12/12/2017 2:29:28 PM, Suha A. Matti, _Default.pc3 ,0.09094, Peter Basso Associates Inc.

THE FOLLOWING DIMENSION EQUALS ONE INCH WHEN PRINTED TO SCALE. 1"

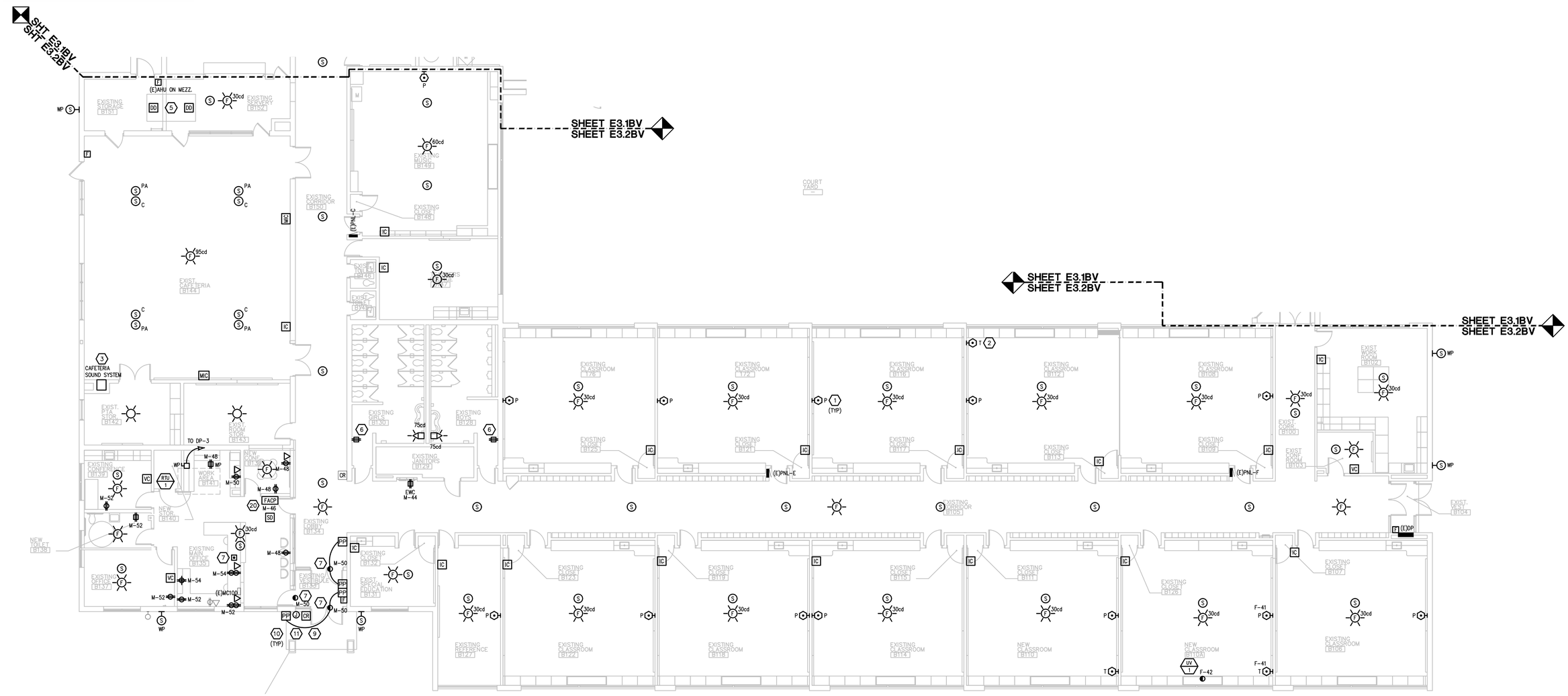

POWER NEW WORK PLAN - AREA 'B'

SCALE: 1/8" = 1' - 0"

GENERAL NOTES:

1. THESE DRAWINGS REPRESENT THE GENERAL EXTENT AND ARRANGEMENT OF SYSTEMS, BUT ARE NOT TO BE CONSIDERED FABRICATION DRAWINGS. COORDINATE WITH OTHER TRADES, AND PROVIDE EACH SYSTEM COMPLETE, INCLUDING ALL NECESSARY COMPONENTS, FITTINGS, AND OFFSETS.
2. INSTALL SYSTEMS SUCH THAT REQUIRED CLEARANCE AND SERVICE ACCESS SPACE IS PROVIDED AROUND ALL MECHANICAL AND ELECTRICAL EQUIPMENT, AND AROUND ANY COMPONENTS WHICH REQUIRE SERVICE ACCESS.
3. COORDINATE AND PROVIDE ACCESS DOORS WITHIN INACCESSIBLE CEILING, SHAFT, AND CHASE AREAS FOR ALL COMPONENTS WHICH REQUIRE SERVICE ACCESS. REFER TO ARCHITECTURAL DRAWINGS FOR CEILING TYPES.
4. PROVIDE SUPPLEMENTARY STEEL AS REQUIRED FOR THE PROPER SUPPORT OF ALL SYSTEMS.
5. TRANSFORMER SECONDARY CONDUCTORS SHALL BE SIZED IN ACCORDANCE WITH TRANSFORMER CIRCUIT SIZING SCHEDULE SHOWN ON "ELECTRICAL STANDARD SCHEDULES DRAWING" UNLESS OTHERWISE NOTED.
6. MOTOR CIRCUIT PROTECTION SHALL BE SIZED IN ACCORDANCE WITH MOTOR CIRCUIT SIZING SCHEDULES SHOWN ON "ELECTRICAL STANDARD SCHEDULES DRAWING" UNLESS OTHERWISE NOTED.
7. COORDINATE THE MOUNTING HEIGHTS OF DEVICES WITH ARCHITECTURAL ELEVATIONS AND THE TRADES INSTALLING THE WORK.
8. COORDINATE EXACT LOCATIONS OF ALL FLOOR BOXES WITH FINAL FURNITURE LAYOUT DRAWINGS.
9. REFER TO MECHANICAL SCHEDULE SHEETS FOR ELECTRICAL REQUIREMENTS FOR MECHANICAL EQUIPMENT. PROVIDE ALL CONNECTIONS, STARTERS, DISCONNECTS, ETC. AS REQUIRED BY SCHEDULES AND WHERE NOTED ELSEWHERE. VERIFY REQUIREMENTS OF ALL MECHANICAL EQUIPMENT WITH SHOP DRAWINGS SUBMITTALS. NOTIFY ENGINEER OF ANY CONFLICTS BETWEEN EQUIPMENT SUBMITTALS AND ELECTRICAL DRAWINGS. WHERE CIRCUIT SIZES ARE SHOWN ON THE ELECTRICAL DRAWINGS THAT DIFFER FROM WHAT IS INDICATED ON THE MECHANICAL SCHEDULES, PROVIDE THE CIRCUIT OF HIGHER AMPACITY.
10. REFER TO TEMPERATURE CONTROLS SHEETS FOR REQUIRED MOTOR CONTROLLERS. PROVIDE ALL ACCESSORIES INDICATED.
11. PROVIDE THE DESIGN AND INSTALLATION FOR A COMPLETE AND FUNCTIONAL FIRE ALARM SYSTEM IN ACCORDANCE WITH SPECIFICATIONS, DRAWINGS, AND ALL APPLICABLE CODES. THE FIRE ALARM VENDOR SHALL PROVIDE LAYOUT DRAWINGS INDICATING THE REQUIRED QUANTITIES AND LOCATIONS OF MANUAL PULL STATIONS, NOTIFICATION APPLIANCES, SMOKE AND HEAT DETECTORS, CONTROL MODULES, INTERFACE MODULES, MODULES FOR SPRINKLER FLOW AND TAMPER SWITCHES, ALL CONTROL PANELS, POWER SUPPLIES, ADDITIONAL DEVICES AND EQUIPMENT REQUIRED. COORDINATE LOCATIONS OF DEVICES WITH ARCHITECTURAL FINISHES AND REFLECTED CEILING PLANS, INCLUDING ADDITIONAL SMOKE AND HEAT DETECTORS REQUIRED FOR NON-SMOOTH CEILING APPLICATIONS. INCLUDE ALLOWANCES FOR ADJUSTMENT OF DEVICES BY THE ARCHITECT AT THE TIME OF SUBMITTAL TO COORDINATE WITH BUILDING FINISHES AND OTHER CEILING ELEMENTS.
12. CIRCUIT EXIT SIGNS UNSWITCHED TO HOT LEG OF LIGHTING BRANCH CIRCUIT SERVING SPACE. ALTERNATE E1BV: CIRCUIT EXIT SIGN TO NEW EMERGENCY LIGHTING BRANCH CIRCUIT AS INDICATED.
13. IN SPACES INDICATED TO RECEIVE NEW LIGHTING. PROVIDE OCCUPANCY/VACANCY/PHOTOCELL CONTROL AS REQUIRED TO COMPLY WITH ASHRAE 90.1-2013. REVISE CIRCUITING AS REQUIRED FOR NEW CONTROLS.
14. EXTEND EXISTING CIRCUIT GROUND AS REQUIRED PER NEC WHERE NEW LIGHTING IS BEING INSTALLED OR EXISTING LIGHTING IS BEING REMOVED AND REINSTALLED.

CONSTRUCTION KEY NOTES:

1. REFER TO SHORT THROW PROJECTOR DETAIL ON E7 SERIES DRAWINGS FOR POWER AND DATA RACEWAY REQUIREMENTS AT NEW PROJECTOR. COORDINATE EXACT LOCATION WITH ARCHITECTURAL DRAWINGS AND TECHNOLOGY CONTRACTOR. WHERE NO CIRCUIT IS INDICATED, EXTEND EXISTING BRANCH CIRCUIT THAT PREVIOUSLY SERVED TELEVISION TO NEW PROJECTOR LOCATION.
2. REFER TO TEACHER STATION RACEWAY DETAIL ON E7 SERIES DRAWINGS FOR POWER AND DATA RACEWAY REQUIREMENTS AT TEACHER STATION. COORDINATE EXACT LOCATION WITH ARCHITECTURAL DRAWINGS AND TECHNOLOGY CONTRACTOR. CIRCUIT RECEPTACLES AS INDICATED.
3. ALTERNATE E2BV: PROVIDE NEW SOUND EQUIPMENT RACK. REFER TO DETAIL ON E7 SERIES DRAWINGS FOR REQUIREMENTS.
4. CIRCUIT NEW MECHANICAL EQUIPMENT TO EXISTING FEEDER AND/OR BRANCH CIRCUIT AS REQUIRED. EXTEND CONDUIT AND WIRE AS REQUIRED.
5. DUCT SMOKE DETECTORS. COORDINATE REQUIRED QUANTITIES AND MOUNTING LOCATIONS WITH EXISTING DUCT WORK TO MEED CODE. (PROVIDE 4 DUCT SMOKE DETECTORS PER AHU/RTU/AC FOR BID PURPOSES. QUANTITIES WILL BE ADJUSTED IN FIELD BAST ON EXISTING DUCT WORK PENETRATIONS AND ROUTING LOCATIONS). COORDINATE INSTALLATION WITH THE EXISTING MECHANICAL DUCT WORK SO THAT UPON DETECTION OF SMOKE, THE SUPPLY/RETURN FAN WILL SHUT DOWN. CONTRACTOR SHALL WIRE DUCT SMOKE DETECTOR TO FIRE ALARM SYSTEM. CONTROL OF AIR HANDLING EQUIPMENT IS VIA THE FIRE ALARM CONTROL PANEL. PROVIDE ALL REQUIRED FIRE ALARM CONTROL MODULES AND RELAYS TO INTERFACE WITH SUPPLY FAN AND ASSOCIATED RETURN FAN (OR EXHAUST FAN). PROVIDE ALL CONTROL MODULES, RELAYS, ETC. FOR A COMPLETE OPERATING SYSTEM.
6. CIRCUIT RECEPTACLE TO EXISTING BRANCH CIRCUIT. EXTEND CONDUIT AND WIRE AS REQUIRED.
7. PROVIDE 120V CIRCUIT IN CEILING SPACE FOR DOOR SECURITY AND CONTROLS AS INDICATED. FOR ALTERNATE E1BV, CIRCUIT DOOR HARDWARE POWER TO LP-SB1-28. REFER TO ARCHITECTURAL FLOOR PLANS, DOOR HARDWARE SCHEDULE ON ARCHITECTURAL DRAWINGS, ACCESS CONTROL SYSTEM SPECIFICATION SECTION, AND ACCESS CONTROL DOOR DIAGRAM(S) ON E7 SERIES DRAWINGS FOR RACEWAY AND BACK BOX REQUIREMENTS FOR DOOR OR BANK OF DOORS INDICATED. PROVIDE ALL RACEWAYS AND BACK BOXES REQUIRED. COORDINATE WITH DOOR HARDWARE CONTRACTOR. PROVIDE 1" CONDUIT FROM ARCHITECTURAL CASE WORK FOR DOOR RELEASE PUSH BUTTON TO ACCESSIBLE CEILING SPACE ABOVE DOORS FOR SECURITY DOOR RELEASE. COORDINATE LOCATION OF PUSH BUTTON WITH OWNER PRIOR TO INSTALLATION.
8. PROVIDE NEW RECEPTACLE FOR PORTABLE GENERATOR CONNECTION. REFER TO E5 SERIES DRAWINGS FOR REQUIREMENTS.
9. PROVIDE 2-GANG JUNCTION BOX WITH 3/4"C TO ABOVE ACCESSIBLE CEILING FOR CARD READER. PROVIDE CONDUIT WITH NYLON PULLSTRING. PROVIDE BLANK COVERPLATE AT JUNCTION BOX. COORDINATE EXACT LOCATION WITH ARCHITECTURAL TRADES.
10. PROVIDE 2-GANG JUNCTION BOX WITH 3/4"C TO ABOVE ACCESSIBLE CEILING FOR DOOR OPERATOR PUSHPAD. PROVIDE CONDUIT WITH NYLON PULLSTRING. PROVIDE BLANK COVERPLATE AT JUNCTION BOX. COORDINATE EXACT LOCATION WITH ARCHITECTURAL TRADES.
11. PROVIDE 2-GANG JUNCTION BOX WITH 3/4"C TO ABOVE ACCESSIBLE CEILING FOR AIPHONE. PROVIDE CONDUIT WITH NYLON PULLSTRING. PROVIDE BLANK COVERPLATE AT JUNCTION BOX. COORDINATE EXACT LOCATION WITH ARCHITECTURAL TRADE.
12. PROVIDE NEW 20A-2P CIRCUIT BREAKER AT EXISTING PANEL LP-L AND BRANCH CIRCUIT FOR NEW CONDENSING UNIT CU-1. ACU-1 SHALL BE POWERED FROM CU-1 AND IS RATED FOR 120V SINGLE PHASE POWER.
13. CIRCUIT NEW MECHANICAL EQUIPMENT TO EXISTING BRANCH CIRCUIT THAT SERVED PREVIOUS EQUIPMENT. EXTEND CONDUIT AND WIRE AS REQUIRED.
14. ALTERNATE E1BV: PROVIDE NEW GENERATOR. REFER TO NEW WORK ONE LINE DIAGRAM ON E5 SERIES DRAWINGS FOR REQUIREMENTS.
15. ALTERNATE E1BV: PROVIDE NEW TRANSFER SWITCHES AND PANELS AS INDICATED. PROVIDE NEW STRUCTURAL STEEL SUPPORT RACK FOR MOUNTING OF EQUIPMENT.
16. ALTERNATE E1BV: DISCONNECT FEEDER/BRANCH CIRCUIT FROM STARTER AND REMOVE COMPLETE (CONDUIT AND WIRE) BACK TO SOURCE. FEEDER FROM STARTER TO MOTOR TO REMAIN FOR REUSE. PROVIDE NEW BRANCH CIRCUIT (CONDUIT AND WIRE) FROM PANEL PP-SB1. REFER TO PANEL SCHEDULE ON E5 SERIES DRAWINGS AND SCHEDULES ON SHEET E0.2BV FOR CIRCUIT REQUIREMENTS.
17. ALTERNATE E1BV: DISCONNECT ASSOCIATED BRANCH CIRCUIT AT BOILER AND REMOVE COMPLETE (CONDUIT AND WIRE) BACK TO SOURCE. PROVIDE NEW BRANCH CIRCUIT (CONDUIT AND WIRE) FROM PANEL PP-SB1. REFER TO PANEL SCHEDULE ON E5 SERIES DRAWING AND SCHEDULES ON SHEET E0.2BV FOR CIRCUIT REQUIREMENTS.
18. ALTERNATE E1BV: DISCONNECT FEEDER FOR (E)PNL-D AND REMOVE COMPLETE (CONDUIT AND WIRE) BACK TO SOURCE. PROVIDE NEW FEEDER (CONDUIT AND WIRE) FROM PANEL PP-SB1. REFER TO PANEL SCHEDULE ON E5 SERIES DRAWINGS AND SCHEDULES ON SHEET E0.2BV FOR REQUIREMENTS.
19. ALTERNATE E1BV: RECIRCUIT EXISTING RECEPTACLE TO NEW BRANCH CIRCUIT AS INDICATED. REMOVE ABANDONED CONDUIT AND WIRE AS REQUIRED.
20. ALTERNATE E1BV: CIRCUIT NEW FIRE ALARM CONTROL PANEL TO CIRCUIT LP-LS1-2 INSTEAD OF NORMAL POWER CIRCUIT AS INDICATED.

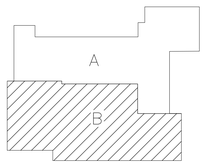

KEY PLAN

WAKELY ASSOCIATES, INC.
ARCHITECTS & ENGINEERS

30500 VAN DYKE AVE.
SUITE M-7
WARREN, MICHIGAN, 48093

TEL. 586-573-4100
FAX. 586-573-0822
E-MAIL: WA@WAKELYAIA.COM

Peter Basso Associates Inc
CONSULTING ENGINEERS
5145 Livernois, Suite 100
Troy, Michigan 48098-3276
Tel: 248-879-5668
Fax: 248-879-0007
www.PeterBassoAssociates.com
PBA Project No.: 2015-0144

FARMINGTON PUBLIC SCHOOLS - 2015 BOND
2018 PROJECTS
KENBROOK & BEECHVIEW ELEMENTARY SCHOOLS

BEECHVIEW ELEMENTARY SCHOOL

POWER NEW WORK PLAN - AREA 'B'

PRELIMINARY ☐
DESIGN DEVELOPMENT ☐
CONSTRUCTION ■
FINAL RECORD ☐

DRAWN BY: JRD
CHECKED BY: GJZ

REVISIONS:

DATE: 12-15-17

SHEET NO.: E3.2BV

JOB NO.: 171712A

g:\2015\2015-0144-00\Cad\beechview es\2015-0144-BV-E3-PP1.dwg, E3.2BV, 12/12/2017 2:29:30 PM, Suho A. Matti, _Default.pc3 ,0.09094, Peter Basso Associates Inc.

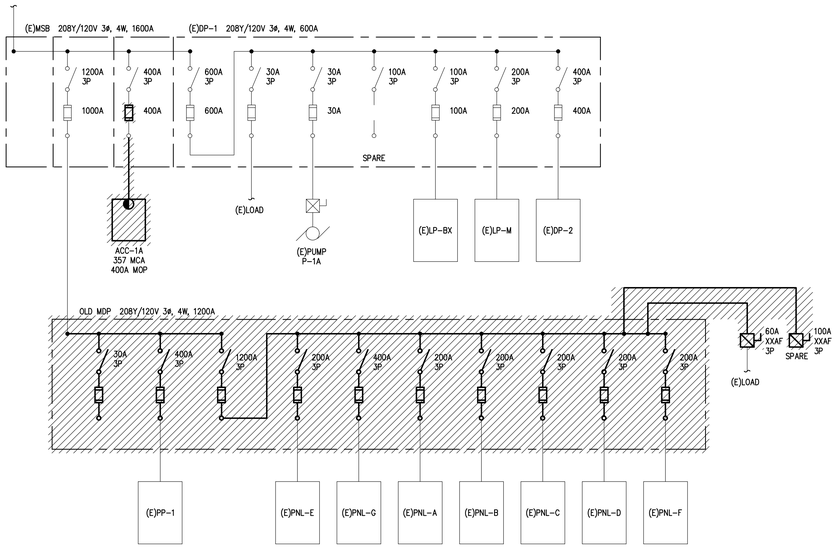

ONE LINE DIAGRAM - DEMOLITION

NO SCALE

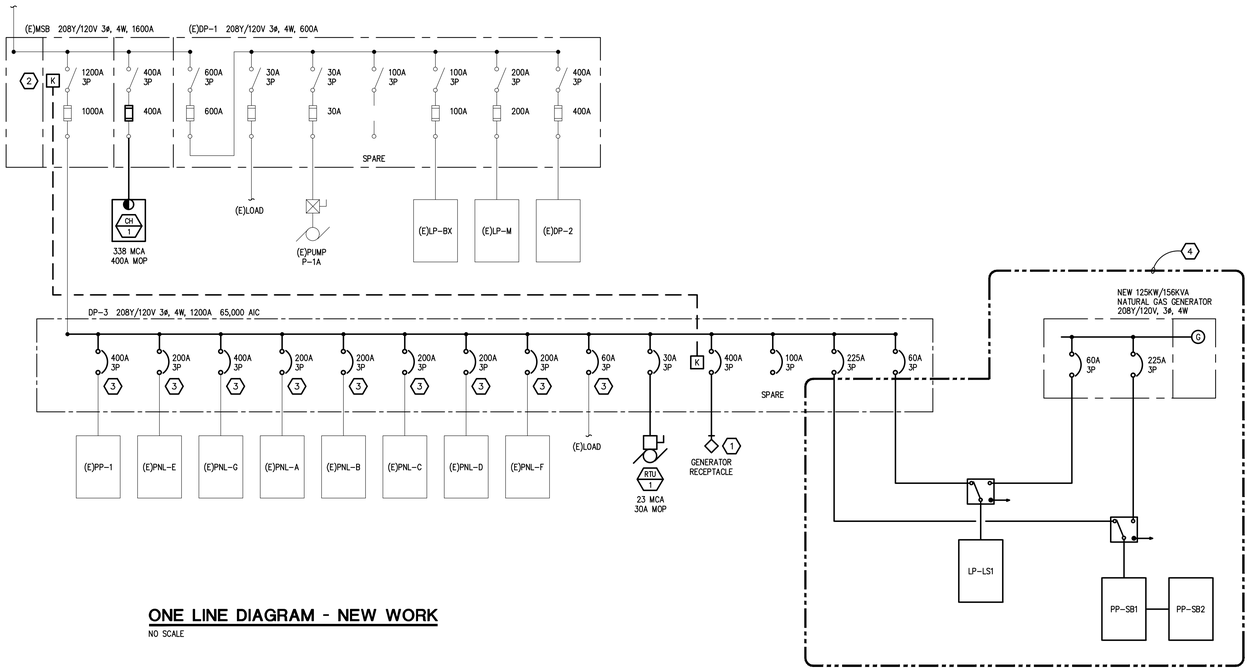

ONE LINE DIAGRAM - NEW WORK

NO SCALE

GENERAL NOTES:

1. THESE DRAWINGS REPRESENT THE GENERAL EXTENT AND ARRANGEMENT OF SYSTEMS, BUT ARE NOT TO BE CONSIDERED FABRICATION DRAWINGS. COORDINATE WITH OTHER TRADES, AND PROVIDE EACH SYSTEM COMPLETE, INCLUDING ALL NECESSARY COMPONENTS, FITTINGS, AND OFFSETS.
2. FEEDER AND BRANCH CIRCUIT CONDUCTORS SHALL BE SIZED IN ACCORDANCE WITH THE "FEEDER AND BRANCH CIRCUIT SIZING SCHEDULE-GENERAL PURPOSE" ON THE "ELECTRICAL STANDARD SCHEDULES DRAWING" UNLESS SPECIFICALLY NOTED OTHERWISE.
3. TRANSFORMER SECONDARY CONDUCTORS SHALL BE SIZED IN ACCORDANCE WITH THE "TRANSFORMER CIRCUIT SIZING SCHEDULE-GENERAL PURPOSE" ON THE "ELECTRICAL STANDARD SCHEDULES DRAWING" UNLESS SPECIFICALLY NOTED OTHERWISE.
4. MOTOR CIRCUIT PROTECTION SHALL BE SIZED IN ACCORDANCE WITH THE MOTOR CIRCUIT SIZING SCHEDULES ON THE "ELECTRICAL STANDARD SCHEDULES DRAWING" UNLESS SPECIFICALLY NOTED OTHERWISE.
5. BASIS OF DESIGN IS SIEMENS DISTRIBUTION EQUIPMENT AND ASCO TRANSFER SWITCHES. IF THE CONTRACTOR ELECTS TO PROVIDE EQUIPMENT FROM OTHER APPROVED MANUFACTURERS, THE CONTRACTOR SHALL BE RESPONSIBLE TO COORDINATE THE LAYOUT AND CLEARANCE REQUIREMENTS IN ALL SPACES CONTAINING ELECTRICAL EQUIPMENT AND PROVIDE EQUIPMENT MEETING THE SPECIFICATIONS AND ACHIEVING CODE REQUIRED CLEARANCES WITHIN THE SPACE PROVIDED.
6. BRANCH CIRCUIT CONDUCTORS, FEEDERS, AND BRANCH CIRCUIT OVERCURRENT PROTECTION ARE SIZED AT 125% OF THE TOTAL CONTINUOUS AND NON CONTINUOUS LOAD FOR LIGHTING AND MOTOR LOADS THAT RUN CONTINUOUSLY FOR THREE HOURS OR MORE (NEC 210.19 A, 210.20 A, AND 215.2 A). DEMAND AND CONNECTED LOADS ARE CALCULATED PER NEC 220.
7. VARIABLE FREQUENCY CONTROLLERS (VFC) FURNISHED BY MECHANICAL TRADES. ELECTRICAL CONTRACTOR SHALL INSTALL VFC, PROVIDE POWER FEEDER FROM DISTRIBUTION EQUIPMENT TO VFC AND PROVIDE POWER FEEDER FROM VFC TO MOTOR. REFER TO SPECIFICATIONS FOR APPLICATION OF VFC POWER CABLE FROM VFC TO MOTOR.

(#) CONSTRUCTION KEY NOTES:

1. PROVIDE CROUSE-HINDS ARKTITE HEAVY DUTY CIRCUIT BREAKING METALLIC RECEPTACLE ASSEMBLY. RECEPTACLE ASSEMBLY TO BE 400 AMP, STYLE 1, 4 WIRE-4 POLE, 1.25" MAXIMUM CONDUCTOR SIZE WITH #4 HUB SIZE. NOT TO BE INCLUDED IF ALTERNATE E1BV IS ACCEPTED.
2. PROVIDE PLASTIC IDENTIFICATION PLACARD MOUNTED ON MSB ADJACENT TO MAIN SWITCH STATING: "SHUT OFF MAIN SWITCH VIA KIRK KEY PRIOR TO TURNING ON GENERATOR BACK-FEED. SHUT OFF FEEDER BREAKERS AS REQUIRED TO MAINTAIN LOAD ON PORTABLE GENERATOR".
3. FIELD VERIFY BRANCH CIRCUIT CONDUCTOR SIZES OF OLD MDP AND PROVIDE NEW CIRCUIT BREAKERS IN NEW DP-3 WITH THE BREAKER SIZED BASED UPON THE EXISTING CONDUCTOR SIZES. FIELD VERIFY PRIOR TO ORDERING NEW PANEL DP-3. EXTEND BRANCH CIRCUITING AS REQUIRED.
4. ALTERNATE E1BV: PROVIDE NEW GENERATOR, TRANSFER SWITCHES, AND PANELS AS INDICATED. REFER TO E3 SERIES DRAWINGS FOR PANEL LOCATIONS. DEDUCT COST ASSOCIATED WITH PORTABLE GENERATOR PLUG (PLUG, FEEDER, KIRK KEY INTERLOCKS, AND 400A-3P CIRCUIT BREAKER AT DP-3) AS ITEMS WILL NOT BE REQUIRED IF ALTERNATE IS ACCEPTED. IF ALTERNATE IS NOT ACCEPTED, THE CIRCUIT BREAKERS IN DISTRIBUTION PANEL DP-3 DESIGNATED FOR USE WITH TRANSFER SWITCHES SHALL STILL BE PROVIDED AS "SPARE".

BUILDING CONNECTED CALCULATIONS

(E)METERED LOAD = 224 KVA X 125% METERED PER N.E.C. 220.87	280 KVA
ADDITONAL LOAD TO MDP	35 KVA
TOTAL NEW BUILDING LOAD	315 KVA

ADDITIONAL LOAD TO MDP	
CH-1	122 KVA
RTU-1	8 KVA
LP-M	33 KVA
TOTAL ADDED LOAD	163 KVA
REMOVED LOAD (ACC-1A)	128 KVA
ADDITONAL LOAD TO MDP	35 KVA

WAKELY ASSOCIATES, INC.
ARCHITECTS & ENGINEERS
30500 VAN DYKE AVE.
SUITE M-7
WARREN, MICHIGAN, 48093
TEL. 586-573-4100
FAX. 586-573-0822
E-MAIL: WA@WAKELYAIA.COM

Peter Basso Associates Inc
CONSULTING ENGINEERS
5145 Livernois, Suite 100
Troy, Michigan 48098-3276
Tel: 248-879-5668
Fax: 248-879-0007
www.PeterBassoAssociates.com
PBA Project No.: 2015-0144

FARMINGTON PUBLIC SCHOOLS - 2015 BOND
2018 PROJECTS
KENBROOK & BEECHVIEW ELEMENTARY SCHOOLS

BEECHVIEW ELEMENTARY SCHOOL

ONE LINE DIAGRAM

PRELIMINARY ☐
DESIGN DEVELOPMENT ☐
CONSTRUCTION ■
FINAL RECORD ☐

DRAWN BY: JRD
CHECKED BY: GJZ

REVISIONS:

DATE: 12-15-17

SHEET NO.:

E5.1BV

JOB NO.: 171712A

g:\2015\2015-0144-00\Cad\beechview es\2015-0144-BV-E5-DG.dwg, E5.1BV, 12/12/2017 2:29:44 PM, Suha A. Matti, _Default.pc3 ,0.09094, Peter Basso Associates Inc.

(E)LP-M

#	LOAD TYPE	DESCRIPTION	CB TYPE	CB	VA	ØA	ØB	ØC	VA	CB	CB TYPE	DESCRIPTION	LOAD TYPE	#
1	C	(E)LOAD		70	500	1000			500	20		(E)LOAD	C	2
3	C	(E)LOAD			500		1000		500	20		(E)LOAD	C	4
5	C	(E)LOAD		20	500			1000	500	20		(E)LOAD	C	6
7	C	(E)LOAD		20	500	1000			500	20		(E)LOAD	C	8
9	C	(E)LOAD		20	500		1000		500	20		(E)LOAD	C	10
11	C	(E)LOAD		20	500			1000	500	20		(E)LOAD	C	12
13	C	(E)LOAD		20	500	1000			500	20		(E)LOAD	C	14
15	C	(E)LOAD		20	500		1000		500	20		(E)LOAD	C	16
17	C	(E)LOAD		20	500			1000	500	20		(E)LOAD	C	18
19	C	(E)LOAD		20	500	1000			500	20		(E)LOAD	C	20
21	C	(E)LOAD		20	500		1000		500	20		(E)LOAD	C	22
23	C	(E)LOAD		20	500			1000	500	20		(E)LOAD	C	24
25	C	(E)LOAD		20	500	1000			500	20		(E)LOAD	C	26
27	C	(E)LOAD		20	500		1000		500	20		(E)LOAD	C	28
29	C	(E)LOAD		20	500			1000	500	20		(E)LOAD	C	30
31	C	(E)LOAD		20	500	1000			500	20		(E)LOAD	C	32
33	C	(E)LOAD		20	500		1000		500	20		(E)LOAD	C	34
35	C	(E)LOAD		20	500			1000	500	20		(E)LOAD	C	36
37	C	(E)LOAD		20	500	1000			500	20		(E)LOAD	C	38
39	C	(E)LOAD		20	500		1000		500	20		(E)LOAD	C	40
41	C	(E)LOAD		20	500			1000	500	20		(E)LOAD	C	42
43		SPARE		20		750			750	20		EWC	R	44
45		SPARE		20			1200		1200	20		FACP – PROVIDE NEW LOCK ON TAB	C	46
47		SPARE		20				720	720	20		RECEPTACLES	R	48
49		SPARE		20		1500			1500	20		DOOR HARDWARE	C	50
51		SPARE		20			1080		1080	20		RECEPTACLES	R	52
53		SPARE		20				540	540	20		RECEPTACLES	R	54
55		SPARE		20						20		SPARE		56
57		SPARE		20						20		SPARE		58
59		SPARE		20						20		SPARE		60
						9250	9280	8260						
						ØA	ØB	ØC						

PANELBOARD INFORMATION
VOLTAGE: 208Y/120
BUS AMPACITY: 225A
MAIN TYPE: MLO
MINIMUM A.I.C.: 10,000
MOUNTING: SURFACE

PANELBOARD LOCATION

BRANCH CIRCUIT CONNECTED LOAD:
CONTINUOUS LOAD (C): 27700
NON-CONTINUOUS LOAD (NC):
KITCHEN LOAD (K):
RECEPTACLE BASE LOAD (R): 3090
RECEPTACLE DEMAND LOAD (R):
LIGHTING LOAD (L):
TRACK LIGHTING (T):
MOTORS, HIGHEST LOAD (MH):
MOTORS, REMAINING LOAD (M):
TOTAL(KVA): 26.79
TOTAL (AMPS): 74.36

FEEDER DEMAND LOAD:
X 125% 29625.
X 100%
X 100%
X 100% 3090
X 50%
X 100%
(150VA/2FT)
X 125%
X 100%
TOTAL(KVA): 32.72
TOTAL (AMPS): 90.81

OVERCURRENT LOAD:
X 100% 29625.
X 100%
X 100%
X 100% 3090
X 100%
X 125%
X 100%
TOTAL(KVA): 32.72
TOTAL (AMPS): 90.81

NOTES:

©Copyright 2014 by Peter Basso Associates, Inc

PP-SB1

#	LOAD TYPE	DESCRIPTION	CB TYPE	CB	VA	ØA	ØB	ØC	VA	CB	CB TYPE	DESCRIPTION	LOAD TYPE	#
1	K				7000	9760			2760				R	2
3	K	(E)PNL-D		100	7000		8000		1000	60		PP-SB2	R	4
5	K				7000			7360	360				R	6
7	M				825	2145			1320				MH	8
9	M	(E)P-1		15	825		2145		1320	20		(E)P-P1	MH	10
11	M				825			2145	1320				MH	12
13	M				825	2145			1320				M	14
15	M	(E)P-2		15	825		2145		1320	20		(E)P-P2	M	16
17	M				825			2145	1320				M	18
19	M				1320	2320			1000	20		BOILER B1	M	20
21	M	(E)P-1A		20	1320		2320		1000	20		BOILER B2	M	22
23	M				1320			2320	1000	20		BOILER CONTROL PANELS	C	24
25	M				450	1200			750	20		BMS PANEL	C	26
27	M	(E)P-6		15	450		1950		1500	20		DOOR HARDWARE	C	28
29	M				450			450		20		SPARE		30
31		SPARE		20						20		SPARE		32
33		SPARE		20						20		SPARE		34
35		SPARE		20						20		SPARE		36
37		SPARE		20						20		SPARE		38
39		SPARE		20						20		SPARE		40
41		SPARE		20						20		SPARE		42
						17570	16560	14420						
						ØA	ØB	ØC						

PANELBOARD INFORMATION
VOLTAGE: 208Y/120
BUS AMPACITY: 225A
MAIN TYPE: 225A MCB
MINIMUM A.I.C.: 10,000
MOUNTING: SURFACE

PANELBOARD LOCATION

BRANCH CIRCUIT CONNECTED LOAD:
CONTINUOUS LOAD (C): 3250
NON-CONTINUOUS LOAD (NC):
KITCHEN LOAD (K): 21000
RECEPTACLE BASE LOAD (R): 4120
RECEPTACLE DEMAND LOAD (R):
LIGHTING LOAD (L):
TRACK LIGHTING (T):
MOTORS, HIGHEST LOAD (MH): 3960
MOTORS, REMAINING LOAD (M): 16220
TOTAL(KVA): 48.55
TOTAL (AMPS): 134.77

FEEDER DEMAND LOAD:
X 125% 4063
X 100%
X 100% 21000
X 100% 4120
X 50%
X 100%
(150VA/2FT)
X 125% 4950
X 100% 16220
TOTAL(KVA): 50.35
TOTAL (AMPS): 139.77

OVERCURRENT LOAD:
X 100% 4063
X 100%
X 100% 21000
X 100% 4120
X 100%
X 125%
X 100%
X 125% 4950
X 100% 16220
TOTAL(KVA): 50.35
TOTAL (AMPS): 139.77

NOTES:
PROVIDE AS PART OF ALT. E18V

©Copyright 2014 by Peter Basso Associates, Inc

PP-SB2

#	LOAD TYPE	DESCRIPTION	CB TYPE	CB	VA	ØA	ØB	ØC	VA	CB	CB TYPE	DESCRIPTION	LOAD TYPE	#
1	R	RECEPT – MDF A147		20	1200	2400			1200	20		RECEPT – MDF A147	R	2
3		SPARE		20			1000		1000	20		RECEPT – MDF A147	R	4
5		SPARE		20				360	360	20		RECEPT – MDF A147	R	6
7		SPARE		20	360			360	360	20		RECEPT – MDF A147	R	8
9		SPARE		20						20		SPARE		10
11		SPARE		20						20		SPARE		12
13		SPARE		20						20		SPARE		14
15		SPARE		20						20		SPARE		16
17		SPARE		20						20		SPARE		18
						2760	1000	360						
						ØA	ØB	ØC						

PANELBOARD INFORMATION
VOLTAGE: 208Y/120
BUS AMPACITY: 60A
MAIN TYPE: MLO
MINIMUM A.I.C.: 10,000
MOUNTING: SURFACE

PANELBOARD LOCATION

BRANCH CIRCUIT CONNECTED LOAD:
CONTINUOUS LOAD (C):
NON-CONTINUOUS LOAD (NC):
KITCHEN LOAD (K):
RECEPTACLE BASE LOAD (R): 4120
RECEPTACLE DEMAND LOAD (R):
LIGHTING LOAD (L):
TRACK LIGHTING (T):
MOTORS, HIGHEST LOAD (MH):
MOTORS, REMAINING LOAD (M):
TOTAL(KVA): 4.12
TOTAL (AMPS): 11.44

FEEDER DEMAND LOAD:
X 125%
X 100%
X 100%
X 100% 4120
X 50%
X 100%
(150VA/2FT)
X 125%
X 100%
TOTAL(KVA): 4.12
TOTAL (AMPS): 11.44

OVERCURRENT LOAD:
X 100%
X 100%
X 100%
X 100% 4120
X 100%
X 125%
X 100%
TOTAL(KVA): 4.12
TOTAL (AMPS): 11.44

NOTES:
PROVIDE AS PART OF ALT. E18V

©Copyright 2014 by Peter Basso Associates, Inc

LP-LS1

#	LOAD TYPE	DESCRIPTION	CB TYPE	CB	VA	ØA	ØB	ØC	VA	CB	CB TYPE	DESCRIPTION	LOAD TYPE	#
1	L	EM LIGHTING – CORRIDORS A104, B150		20	520	1520			1000	20		EM LIGHTING – MEDIA CENTER AND CORR. B105	L	2
3	L	EM LIGHTING – GYMNASIUM A137		20	1000		2000		1000	20		FACP	C	4
5	L	EM LIGHTING – SOUTHWEST ROOMS		20	620			620		20		SPARE		6
7		SPARE		20						20		SPARE		8
9		SPARE		20						20		SPARE		10
11		SPARE		20						20		SPARE		12
13		SPARE		20						20		SPARE		14
15		SPARE		20						20		SPARE		16
17		SPARE		20						20		SPARE		18
						1520	2000	620						
						ØA	ØB	ØC						

PANELBOARD INFORMATION
VOLTAGE: 208Y/120
BUS AMPACITY: 60A
MAIN TYPE: 60A MCB
MINIMUM A.I.C.: 10,000
MOUNTING: SURFACE

PANELBOARD LOCATION

BRANCH CIRCUIT CONNECTED LOAD:
CONTINUOUS LOAD (C): 1000
NON-CONTINUOUS LOAD (NC):
KITCHEN LOAD (K):
RECEPTACLE BASE LOAD (R):
RECEPTACLE DEMAND LOAD (R):
LIGHTING LOAD (L): 3140
TRACK LIGHTING (T):
MOTORS, HIGHEST LOAD (MH):
MOTORS, REMAINING LOAD (M):
TOTAL(KVA): 4.14
TOTAL (AMPS): 11.49

FEEDER DEMAND LOAD:
X 125% 1250
X 100%
X 100%
X 100% 3140
X 50%
X 100%
(150VA/2FT)
X 125%
X 100%
TOTAL(KVA): 4.39
TOTAL (AMPS): 12.19

OVERCURRENT LOAD:
X 100% 1250
X 100%
X 100%
X 100% 3925
X 100%
X 125%
X 100%
TOTAL(KVA): 5.18
TOTAL (AMPS): 14.36

NOTES:
PROVIDE AS PART OF ALT. E18V

PROVIDE WITH INTEGRAL
SURGE SUPPRESSION

©Copyright 2014 by Peter Basso Associates, Inc

WA
WAKELY ASSOCIATES, INC.
ARCHITECTS & ENGINEERS
30500 VAN DYKE AVE.
SUITE M-7
WARREN, MICHIGAN, 48093
TEL. 586-573-4100
FAX. 586-573-0822
E-MAIL: WA@WAKELYAIA.COM

Peter Basso Associates Inc
CONSULTING ENGINEERS
5145 Livernois, Suite 100
Troy, Michigan 48098-3276
Tel: 248-879-5668
Fax: 248-879-0007
www.PeterBassoAssociates.com
PBA Project No.: 2015-0144

FARMINGTON PUBLIC SCHOOLS - 2015 BOND
2018 PROJECTS
KENBROOK & BEECHVIEW ELEMENTARY SCHOOLS

BEECHVIEW ELEMENTARY SCHOOL
PANEL SCHEDULES

PRELIMINARY ☐
DESIGN DEVELOPMENT ☐
CONSTRUCTION ■
FINAL RECORD ☐

DRAWN BY: .
CHECKED BY: .

REVISIONS:

DATE: 12-15-17
SHEET NO.:
E5.2BV
JOB NO.: 171712A

g:\2015\2015-0144-00\Cad\beechview es\2015-0144-BV-E5-DG.dwg, E5.2BV, 12/12/2017 2:29:46 PM, Suha A. Matti, _Default.pc3 ,0.09094, Peter Basso Associates Inc.

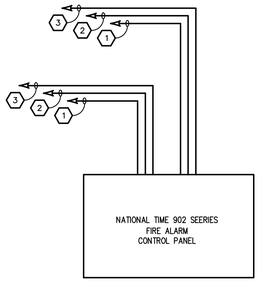

KEY NOTES:

1. ADDRESSABLE INITIATING DEVICE LOOP (SIGNALING LINE CIRCUIT), CLASS B, STYLE 4 WIRING. INCLUDES MANUAL PULL STATIONS, SMOKE DETECTORS, THERMAL DETECTORS, WATER FLOW SWITCHES, TAMPER SWTCHES, ETC. SEE PLAN DRAWINGS FOR DEVICE LOCATIONS AND QUANTITIES. PROVIDE WIRING AS SPECIFIED BY SYSTEM MANUFACTURER.
2. VISUAL NOTIFICATION APPLIANCE CIRCUIT, CLASS B, STYLE Y WIRING. SEE PLAN DRAWINGS FOR FOR DEVICE LOCATION AND QUANTITIES. PROVIDE WIRING AND NUMBER OF CIRCUITS AS REQUIRED BY SYSTEM MANUFACTURER BASED ON MANUFACTURERS CIRCUIT LOAD CALCULATIONS.
3. AUDIBLE NOTIFICATION APPLIANCE CIRCUIT, CLASS B, STYLE Y WIRING. SEE PLAN DRAWINGS FOR FOR DEVICE LOCATION AND QUANTITIES.

FIRE ALARM RISER DIAGRAM

NO SCALE

NOTE:

1. COORDINATE ROOM NAMES AND/OR NUMBERS WITH OWNER PRIOR TO FINAL PROGRAMMING.
2. PROVIDE MANUFACTURER'S FIELD SERVICES FOR SUPERVISING FINAL WIRING CONNECTIONS, INSPECTION AND ADJUSTING OF COMPLETED INSTALLATION, AND SYSTEMS DEMONSTRATION.
3. PROVIDE 2 YEAR WARRANTY PARTS AND SERVICE.

SYSTEM OUTPUTS

SYSTEM INPUTS	ACTUATE COMMON ALARM SIGNAL INDICATOR	ACTUATE EVACUATION SIGNALS	ACTUATE COMMON SUPERVISORY SIGNAL INDICATOR	ACTUATE AUDIBLE SUPERVISORY SIGNAL	ACTUATE COMMON TROUBLE SIGNAL INDICATOR	ACTUATE AUDIBLE TROUBLE SIGNAL	DISPLAY CHANGE OF STATUS	ACTUATE ALARM SEQUENCE ON EXIST. FA CONTROL PNL	TRANSMIT FIRE ALARM SIGNAL TO SECURITY	TRANSMIT SUPERVISORY SIGNAL TO SECURITY	TRANSMIT TROUBLE SIGNAL TO SECURITY	RELEASE MAGNETICALLY HELD SMOKE DOORS
MANUAL FIRE ALARM BOXES	●	●					●	●	●			
SMOKE AND HEAT DETECTOR ACTIVATION	●	●					●	●	●			
DUCT DETECTOR ACTIVATION	●	●					●	●	●			
FLOW SWITCH ACTIVATION	●	●					●	●	●			●
TAMPER SWITCH ACTIVATION			●	●						●		
FIRE ALARM AC POWER FAILURE			●	●						●		
FIRE ALARM SYSTEM LOW BATTERY					●	●					●	
OPEN CIRCUIT					●	●					●	
GROUND FAULT					●	●					●	
NOTIFICATION APPLIANCE CIRCUIT SHORT					●	●					●	

FIRE ALARM MATRIX

NO SCALE

NOTES:

1. PROVIDE ALL RELAYS, CONTROL MODULES AND MATERIAL AND LABOR REQUIRED TO SHUT DOWN AIR HANDLING UNITS. COORDINATE WORK WITH THE TEMPERATURE CONTROL CONTRACTOR.
2. FIRE ALARM VENDER SHALL CONFIRM THE ABOVE OPERATION MATRIX WITH THE AUTHORITIES HAVING JURISDICTION. REVISE AS REQUIRED.

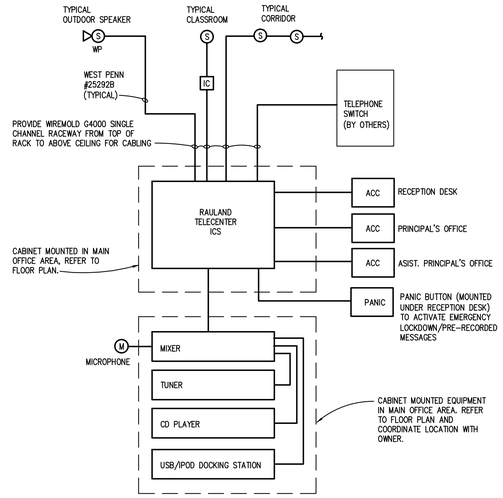

PUBLIC ADDRESS SYSTEM DETAIL

NO SCALE

NOTES:

1. REFER TO FLOOR PLANS FOR LOCATIONS OF SPEAKERS.
2. PROVIDE ALL NEW CABLING FOR THE ENTIRE SYSTEM. PROVIDE V4000 FROM ABOVE CEILING TO PA SYSTEM RACK FOR NEW CABLING.
3. INSTALL EQUIPMENT IN ACCORDANCE WITH MANUFACTURER'S INSTRUCTIONS.
4. SPLICE CABLE ONLY IN ACCESSIBLE JUNCTION BOXES OR AT TERMINAL BLOCK UNITS.
5. MAKE CABLE SHIELDS CONTINUOUS AT SPLICES AND CONNECT SPEAKER CIRCUIT SHIELD TO EQUIPMENT GROUND ONLY AT AMPLIFIER.
6. INSTALL INPUT CIRCUITS IN SEPARATE CABLES AND RACEWAYS FROM OUTPUT CIRCUITS.
7. PROVIDE PROTECTION FOR EXPOSED CABLES SUBJECT TO DAMAGE.
8. SUPPORT CABLES ABOVE ACCESSIBLE CEILINGS TO KEEP THEM FROM RESTING ON CEILING TILES. USE SPRING METAL CLIPS OR PLASTIC CABLE TIES TO SUPPORT CABLES FROM STRUCTURE. INCLUDE BRIDLE RINGS OR DRIVE RINGS.
9. USE SUITABLE CABLE FITTINGS AND CONNECTORS.
10. PROVIDE MANUFACTURER'S FIELD SERVICES FOR SUPERVISING FINAL WIRING CONNECTIONS, INSPECTION AND ADJUSTING OF COMPLETED INSTALLATION, AND SYSTEMS DEMONSTRATION.
11. ADJUST TRANSFORMER TAPS FOR APPROPRIATE SOUND LEVEL.
12. ADJUST DEVICES AND WALL PLATES TO BE FLUSH AND LEVEL.
13. SEE FLOOR PLANS FOR LOCATION OF NEW CLOCKS.
14. PROVIDE MANUFACTURER'S FIELD SERVICES FOR SUPERVISING FINAL WIRING CONNECTIONS AT MASTER CLOCK SYSTEM PANEL, INSPECTION AND ADJUSTING OF COMPLETED INSTALLATION, AND SYSTEMS DEMONSTRATION.
15. INSTALL EQUIPMENT IN ACCORDANCE WITH MANUFACTURER'S INSTRUCTIONS.
16. ALL CIRCUITING SHALL BE IN CONDUIT, WHERE REQUIRED BY THE N.E.C.

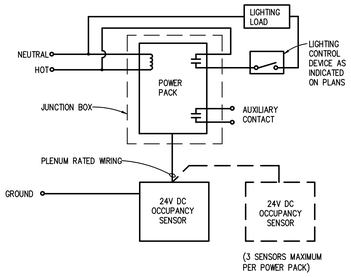

OCCUPANCY SENSOR WIRING DIAGRAM

NO SCALE

NOTES:

1. REFER TO SPECIFICATIONS FOR ACCEPTED MANUFACTURERS.
2. PROVIDE POWER PACKS AND SLAVE PACKS AS REQUIRED FOR SWITCHING AS INDICATED ON PLAN. REVISE DETAIL AS REQUIRED BY MANUFACTURER.
3. MOUNTING LOCATION PER MANUFACTURER'S RECOMMENDATION.
4. ADJUST SENSITIVITY LEVELS PER THE OWNER REQUIREMENTS.
5. PROVIDE FACTORY SUPPORT FOR AIMING/ADJUSTING OF SENSORS.
6. PLACE CEILING MOUNTED OCCUPANCY SENSORS IN CENTER OF A FULL CEILING TILE, WHERE APPLICABLE.
7. SENSOR ADJUSTMENT: BEFORE MAKING ADJUSTMENTS, MAKE SURE ROOM FURNITURE IS INSTALLED, LIGHTING CIRCUITS ARE TURNED ON, AND THE HVAC SYSTEMS ARE IN THE ON POSITION. VAV SYSTEMS SHOULD BE SET TO THEIR HIGHEST AIRFLOW. SET THE LOGIC CONFIGURATION DIP SWITCHES TO "EITHER". EITHER REQUIRES MOTION DETECTION BY ONLY ONE TECHNOLOGY. SET THE TIME DELAY PER OWNERS DIRECTION.

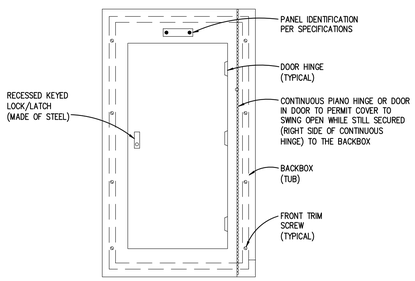

PANELBOARD FRONT COVER DETAIL

NO SCALE

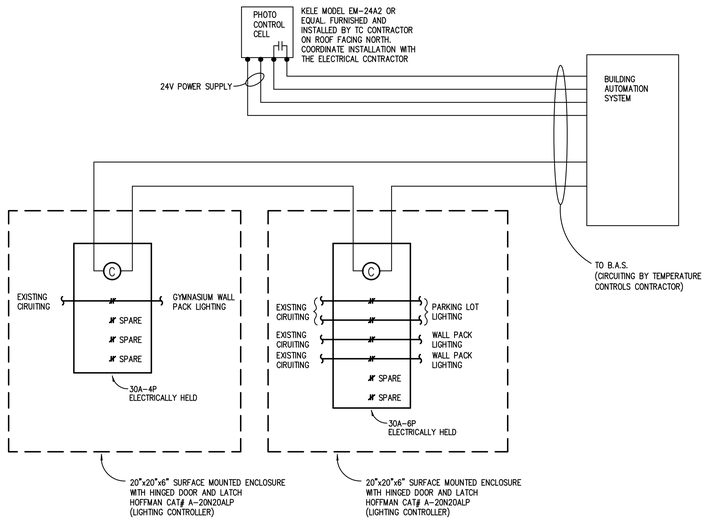

EXTERIOR LIGHTING CONTROLLER

NO SCALE

NOTES

1. PROGRAM B.A.S. SYSTEM TIME SCHEDULE PER THE OWNER'S DIRECTION.
2. LIGHTING SHALL BE PHOTO CELL ON AND BAS CONTROL OFF AS DIRECTED BY OWNER.
3. INTERCEPT EXISTING CIRCUITING AND EXTEND CIRCUITING AS REQUIRED. MATCH EXISTING WIRE SIZE. VERIFY AND CIRCUIT TRACE EXISTING CIRCUITS.

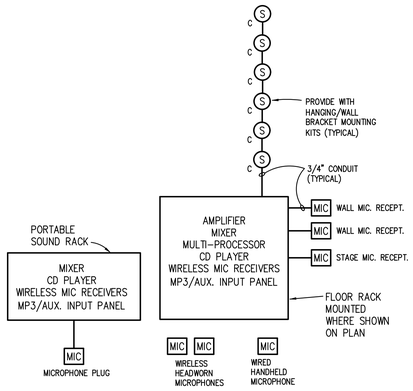

CAFETERIA SOUND SYSTEM DETAIL

NO SCALE

NOTE:
PROVIDE ALL CABLING PER MANUFACTURERS RECOMMENDATIONS. EQUIPMENT TO BE FURNISHED AND INSTALLED BY SOUNDCOM, HORIZON COMMUNICATIONS, OR OTHER QUALIFIED SOUND SYSTEM PROVIDER (AS SUB-CONTRACTOR TO THE E.C.).
PROVIDE ALL MISC WIRE/CABLING CONNECTORS AND BRACKETS FOR A COMPLETE SYSTEM. TEST AND TUNE SYSTEM. PROVIDE OWNER TRAINING. ENTIRE SYSTEM SHALL BE WARRANTED FOR FOR 1 YEARS FROM DATE OF ACCEPTANCE.

EQUIPMENT LIST

(MISC. EQUIPMENT)
6 JBL AM5215/95 SPEAKERS
3 HANGING/WALL BRACKETS (PROVIDE SUPPORT AS REQUIRED)
2 WALL MOUNTED MICROPHONE OUTLETS WITH MICROPHONE JACKS
1 SHURE SM58S MICROPHONE WITH 25' CABLE

(FLOOR RACK)
2 CROWN CDI-1000 AMPLIFIERS
1 SHURE SCM268 MIXER
1 DBX 220I DRIVERACK FEEDBACK SUPPRESSOR (MULTI-PROCESSOR)
1 LOWELL LER-2422 LOCKING FLOOR CABINET (SIZED TO HOUSE EQUIPMENT NEEDED) WITH TWO RACK SPACE LOCKABLE DRAWER, PLUG STRIP AND FRONT DOOR

(PORTABLE RACK)
1 MACKIE 1604VLZ4 MIXING BOARD
1 DENNON DN-C615 CD PLAYER
2 AKG WMS470 WIRELESS HANDHELD MICROPHONE AND ALL COMPONENTS OR EQUAL
1 AKG WMS470 WIRELESS PRESENTER HEADWORN MIRCOPHONE AND ALL COMPONENTS OR EQUAL
1 PROCO IRACK MP3/AUX. INPUT PANEL
1 LOWELL PORTABLE RACK (SIZED TO HOUSE EQUIPMENT NEEDED) WITH CASTERS, TWO RACK SPACE LOCKABLE DRAWER AND PLUG STRIP, SYSTEM SHALL BE CAPABLE OF PROVIDING MUSIC FROM CD PLAYER, TUNER AND MAKE ANNOUNCEMENTS FROM WIRELESS MICROPHONES AND WIRED MICROPHONES BY PLUGGING INTO ANY MICROPHONE JACK

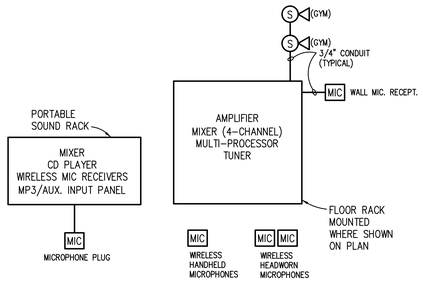

GYMNASIUM SOUND SYSTEM DETAIL

NO SCALE

NOTE:
PROVIDE ALL CABLING PER MANUFACTURERS RECOMMENDATIONS. EQUIPMENT TO BE FURNISHED AND INSTALLED BY SOUNDCOM, HORIZON COMMUNICATIONS, OR OTHER QUALIFIED SOUND SYSTEM PROVIDER (AS SUB-CONTRACTOR TO THE E.C.).
PROVIDE ALL MISC WIRE/CABLING CONNECTORS AND BRACKETS FOR A COMPLETE SYSTEM. TEST AND TUNE SYSTEM. PROVIDE OWNER TRAINING. ENTIRE SYSTEM SHALL BE WARRANTED FOR FOR 1 YEARS FROM DATE OF ACCEPTANCE.

EQUIPMENT LIST

(MISC. EQUIPMENT)
2 EV SX300PIX SPEAKERS
2 HANGING/WALL BRACKETS (PROVIDE SUPPORT AS REQUIRED)
2 WALL MOUNTED MICROPHONE OUTLETS WITH MICROPHONE JACKS
1 SHURE SM58S MICROPHONE WITH 25' CABLE
1 ATLASOUND FLOOR STAND MS12CE

(FLOOR RACK)
1 CROWN CDI-1000 AMPLIFIERS
1 SHURE SCM268 MIXER
1 DBX 220I DRIVERACK FEEDBACK SUPPRESSOR (MULTI-PROCESSOR)
1 LOWELL LER-2422 LOCKING FLOOR CABINET (SIZED TO HOUSE EQUIPMENT NEEDED) WITH TWO RACK SPACE LOCKABLE DRAWER, PLUG STRIP AND FRONT DOOR

(PORTABLE RACK)
1 MACKIE 1604VLZ4 MIXING BOARD
1 DENNON DN-C615 CD PLAYER
1 AKG WMS470 WIRELESS HANDHELD MICROPHONE AND ALL COMPONENTS OR EQUAL
2 AKG WMS470 WIRELESS PRESENTER HEADWORN MIRCOPHONE AND ALL COMPONENTS OR EQUAL
1 PROCO IRACK MP3/AUX. INPUT PANEL
1 LOWELL PORTABLE RACK (SIZED TO HOUSE EQUIPMENT NEEDED) WITH CASTERS, TWO RACK SPACE LOCKABLE DRAWER AND PLUG STRIP, SYSTEM SHALL BE CAPABLE OF PROVIDING MUSIC FROM CD PLAYER, TUNER AND MAKE ANNOUNCEMENTS FROM WIRELESS MICROPHONES AND WIRED MICROPHONES BY PLUGGING INTO ANY MICROPHONE JACK

WA
WAKELY ASSOCIATES, INC.
ARCHITECTS & ENGINEERS
30500 VAN DYKE AVE.
SUITE M-7
WARREN, MICHIGAN, 48093
TEL. 586-573-4100
FAX. 586-573-0822
E-MAIL: WA@WAKELYAIA.COM

PBA
Peter Basso Associates Inc
CONSULTING ENGINEERS
5145 Livernois, Suite 100
Troy, Michigan 48098-3276
Tel: 248-879-5668
Fax: 248-879-0007
www.PeterBassoAssociates.com
PBA Project No.: 2015-0144

FARMINGTON PUBLIC SCHOOLS - 2015 BOND
2018 PROJECTS
KENBROOK & BEECHVIEW ELEMENTARY SCHOOLS

BEECHVIEW ELEMENTARY SCHOOL

ELECTRICAL DETAILS

PRELIMINARY ☐
DESIGN DEVELOPMENT ☐
CONSTRUCTION ■
FINAL RECORD ☐

DRAWN BY: JRD
CHECKED BY: GJZ

REVISIONS:

DATE: 12-15-17

SHEET NO.:

E7.1BV

JOB NO.: 171712A

g:\2015\2015-0144-00\Cad\beechview es\2015-0144-BV-E7-DT.dwg, E7.1BV, 12/12/2017 2:29:54 PM, Suha A. Matti, _Default.pc3 ,0.09094, Peter Basso Associates Inc.

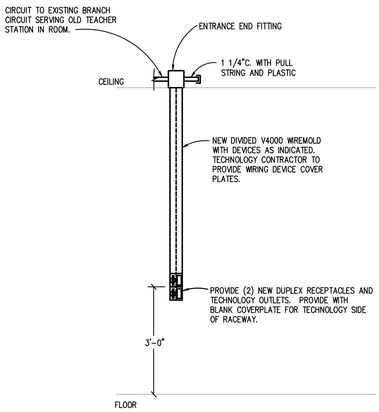

TEACHER STATION RACEWAY DETAIL

NO SCALE

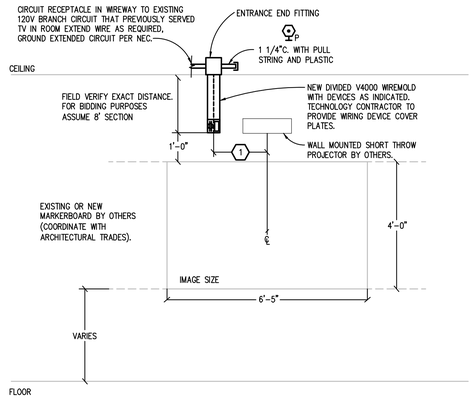

SHORT THROW PROJECTOR POWER/DATA MOUNTING DETAIL

NO SCALE

NOTES:

1. MOUNT RACEWAY AT 15" TO THE LEFT OR RIGHT OF CENTERLINE OF MARKERBOARD. ADJUST SIDE AS REQUIRED FOR CLOCKS, PA SPEAKERS, OR OTHER OBSTRUCTIONS. COORDINATE EXACT LOCATION IN FIELD WITH EXISTING CONDITIONS AND TECHNOLOGY CONTRACTOR. MINIMUM DISTANCE FROM OBSTRUCTION IS 21".

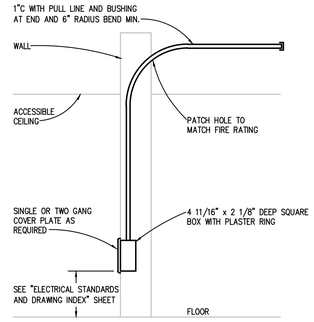

TELE/DATA OUTLET DETAIL

NO SCALE

NOTE:

IF CEILING IN ROOM IS NOT ACCESSIBLE ROUTE CONDUIT TO NEAREST ACCESSIBLE CEILING IN DIRECTION OF TELECOM ROOM.

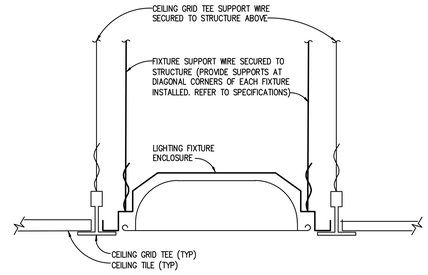

RECESSED LIGHTING FIXTURE INSTALLATION DETAIL

NO SCALE

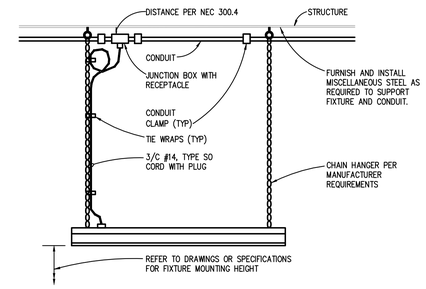

TYPICAL MOUNTING DETAIL FOR CHAIN HUNG LIGHTING FIXTURES

NO SCALE

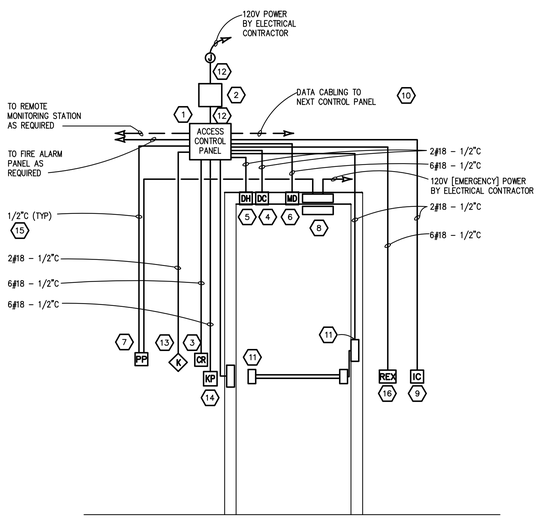

TYPICAL ACCESS CONTROL SINGLE DOOR CONNECTION DIAGRAM

NO SCALE

GENERAL NOTES:

1. REFER TO ELECTRICAL FLOOR PLANS FOR INDIVIDUAL DOOR REQUIREMENTS AND DEVICE LOCATIONS.
2. ELECTRICAL CONTRACTOR SHALL PROVIDE BACK BOXES, CONDUIT, AND 120 VOLT WIRING AND TERMINATIONS. ACCESS CONTROL CONTRACTOR SHALL PROVIDE EQUIPMENT DEVICES AND ALL LOW VOLTAGE WIRING AND TERMINATIONS. WIRE SIZES AND QUANTITIES ARE TYPICAL ONLY, PROVIDE WIRING AS REQUIRED BY MANUFACTURER.
3. REFER TO DOOR HARDWARE AND DOOR SCHEDULE AND COORDINATE ALL WORK WITH HARDWARE CONTRACTOR .
4. ELECTRICAL CONTRACTOR SHALL PROVIDE INTERCONNECTION WITH FIRE ALARM PANEL TO RELEASE DOORS I.E. ELECTROMAGNETIC LOCKS UPON AN ALARM CONDITION, AS REQUIRED.

(#) KEYED NOTES:

1. ACCESS CONTROL SYSTEM, DOOR PANEL. PROVIDE A 2-8 DOOR TYPE AS SPECIFIED, AND AS REQUIRED.
2. DOOR CONTROLLER POWER SUPPLY. PROVIDE AS SPECIFIED.
3. PROXIMITY CARD READER. PROVIDE AS SPECIFIED.
4. DOOR MONITOR CONTACT SWITCH: PROVIDE SWITCH, MOUNTED IN DOOR AND FRAME. [PROVIDED BY HARDWARE CONTRACTOR] PROVIDE INTERCONNECTION WIRING AND CONDUIT AS REQUIRED.
5. DOOR HOLDER: ELECTROMAGNETIC SWITCH MOUNTED ON/IN DOOR AND FRAME. [FOR DELAYED OPERATION] IN LIEU OF ELECTRIC STRIKE.
6. MOTION DETECTOR: REQUEST TO EXIT MOTION DETECTOR MOUNTED TO TOP OF DOOR FRAME. COORDINATE WITH DOOR AND FRAME CONTRACTOR.
7. DOOR OPERATOR PUSH PLATE: PROVIDED BY OTHERS, PROVIDE INTERCONNECTION WIRING AND CONDUIT AS REQUIRED.
8. DOOR OPERATOR: PROVIDED BY HARDWARE CONTRACTOR. COORDINATE POWER REQUIREMENTS WIRING AND CONDUIT AS REQUIRED.
9. INTERCOM STATION: PROVIDE INTERCONNECTION FROM MASTER STATION TO [TWO] REMOTE STATIONS FOR MANUAL RELEASE OF DOOR STRIKE.
10. CABLING: PROVIDE ALL CABLING BETWEEN DOORS, DEVICES AND CONTROL PANEL AND BETWEEN REMOTE MONITORING STATION AS REQUIRED PER MANUFACTURERS RECOMMENDATION. ROUTE AND SUPPORT PER TELECOMMUNICATIONS CABLING.
11. ELECTRIC STRIKE, PANIC HARDWARE, POWER TRANSFER: PROVIDED BY HARDWARE CONTRACTOR. COORDINATE POWER REQUIREMENTS AND WIRING CONNECTIONS. PROVIDE WIRING AND CONDUIT AS REQUIRED.
12. PROVIDE ALL LOW VOLTAGE WIRING AND CONDUIT AS REQUIRED.
13. KEY-SWITCH: PROVIDE SWITCH TO ALLOW DELAYED OPERATION OVERRIDE.
14. KEYPAD: PROVIDE AS SPECIFIED. [IN LIEU OF CARD READER]
15. WIRING PROVIDED BY PUSH PLATE INSTALLER. PROVIDE TERMINATIONS, AS REQUIRED.
16. REQUEST TO EXIT (REX) PUSH PAD: PROVIDE ON "INTERIOR", NON-SECURED SIDE. [IN LIEU OF MOTION DETECTOR TYPE] PROVIDE DEVICE AND ALL INTERCONNECTION WIRING AND CONDUIT AS REQUIRED.

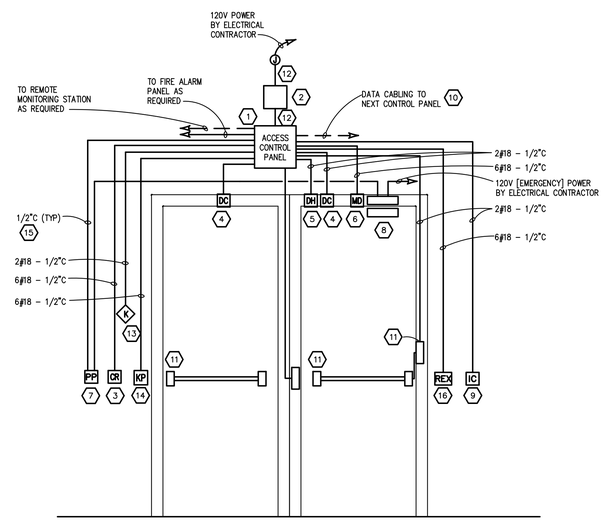

TYPICAL ACCESS CONTROL DOUBLE DOOR CONNECTION DIAGRAM

NO SCALE

GENERAL NOTES:

1. REFER TO ELECTRICAL FLOOR PLANS FOR INDIVIDUAL DOOR REQUIREMENTS AND DEVICE LOCATIONS.
2. ELECTRICAL CONTRACTOR SHALL PROVIDE BACK BOXES, CONDUIT, AND 120 VOLT WIRING AND TERMINATIONS. ACCESS CONTROL CONTRACTOR SHALL PROVIDE EQUIPMENT DEVICES AND ALL LOW VOLTAGE WIRING AND TERMINATIONS. WIRE SIZES AND QUANTITIES ARE TYPICAL ONLY, PROVIDE WIRING AS REQUIRED BY MANUFACTURER.
3. REFER TO DOOR HARDWARE AND DOOR SCHEDULE AND COORDINATE ALL WORK WITH HARDWARE CONTRACTOR .
4. ELECTRICAL CONTRACTOR SHALL PROVIDE INTERCONNECTION WITH FIRE ALARM PANEL TO RELEASE DOORS I.E. ELECTROMAGNETIC LOCKS UPON AN ALARM CONDITION, AS REQUIRED.

(#) KEYED NOTES:

1. ACCESS CONTROL SYSTEM, DOOR PANEL. PROVIDE A 2-8 DOOR TYPE AS SPECIFIED, AND AS REQUIRED.
2. DOOR CONTROLLER POWER SUPPLY. PROVIDE AS SPECIFIED.
3. PROXIMITY CARD READER. PROVIDE AS SPECIFIED.
4. DOOR MONITOR CONTACT SWITCH: PROVIDE SWITCH, MOUNTED IN DOOR AND FRAME. [PROVIDED BY HARDWARE CONTRACTOR] PROVIDE INTERCONNECTION WIRING AND CONDUIT AS REQUIRED.
5. DOOR HOLDER: ELECTROMAGNETIC SWITCH MOUNTED ON/IN DOOR AND FRAME. [FOR DELAYED OPERATION] IN LIEU OF ELECTRIC STRIKE.
6. MOTION DETECTOR: REQUEST TO EXIT MOTION DETECTOR MOUNTED TO TOP OF DOOR FRAME. COORDINATE WITH DOOR AND FRAME CONTRACTOR.
7. DOOR OPERATOR PUSH PLATE: PROVIDED BY OTHERS, PROVIDE INTERCONNECTION WIRING AND CONDUIT AS REQUIRED.
8. DOOR OPERATOR: PROVIDED BY HARDWARE CONTRACTOR. COORDINATE POWER REQUIREMENTS WIRING AND CONDUIT AS REQUIRED.
9. INTERCOM STATION: PROVIDE INTERCONNECTION FROM MASTER STATION TO [TWO] REMOTE STATIONS FOR MANUAL RELEASE OF DOOR STRIKE.
10. CABLING: PROVIDE ALL CABLING BETWEEN DOORS, DEVICES AND CONTROL PANEL AND BETWEEN REMOTE MONITORING STATION AS REQUIRED PER MANUFACTURERS RECOMMENDATION. ROUTE AND SUPPORT PER TELECOMMUNICATIONS CABLING.
11. ELECTRIC STRIKE, PANIC HARDWARE, POWER TRANSFER: PROVIDED BY HARDWARE CONTRACTOR. COORDINATE POWER REQUIREMENTS AND WIRING CONNECTIONS. PROVIDE WIRING AND CONDUIT AS REQUIRED.
12. PROVIDE ALL LOW VOLTAGE WIRING AND CONDUIT AS REQUIRED.
13. KEY-SWITCH: PROVIDE SWITCH TO ALLOW DELAYED OPERATION OVERRIDE.
14. KEYPAD: PROVIDE AS SPECIFIED. [IN LIEU OF CARD READER]
15. WIRING PROVIDED BY PUSH PLATE INSTALLER. PROVIDE TERMINATIONS, AS REQUIRED.
16. REQUEST TO EXIT (REX) PUSH PAD: PROVIDE ON "INTERIOR", NON-SECURED SIDE. [IN LIEU OF MOTION DETECTOR TYPE] PROVIDE DEVICE AND ALL INTERCONNECTION WIRING AND CONDUIT AS REQUIRED.

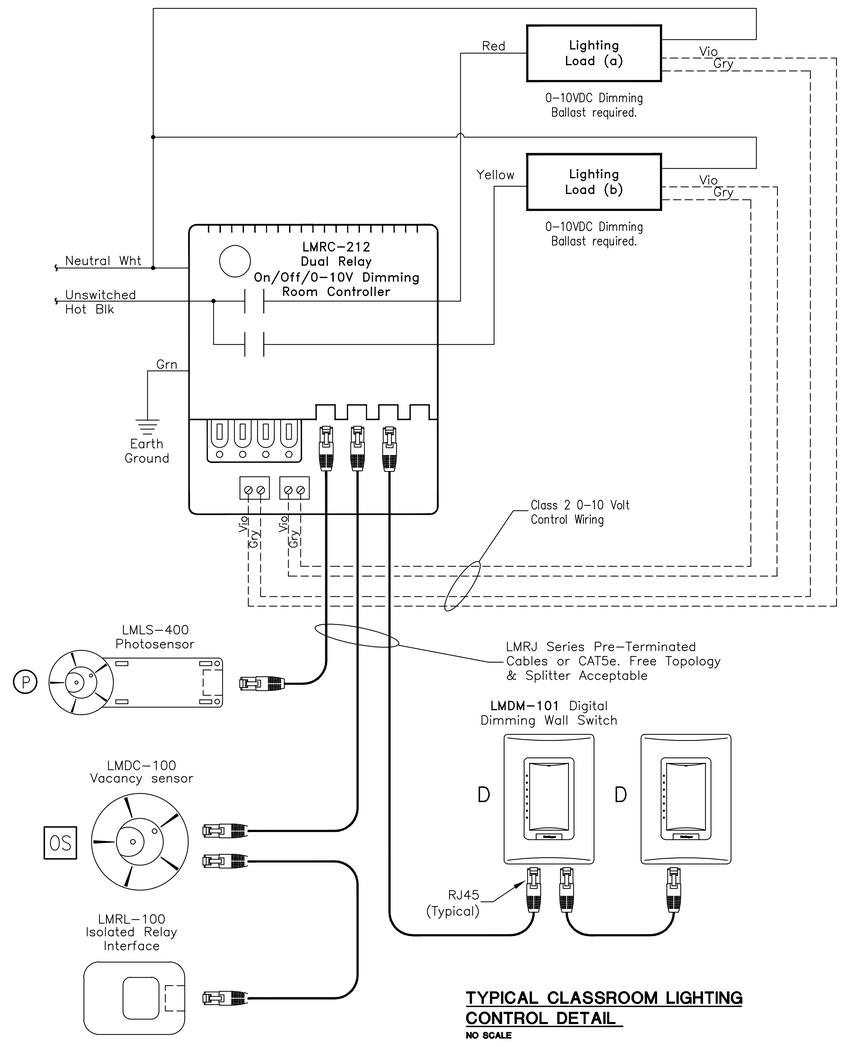

TYPICAL CLASSROOM LIGHTING CONTROL DETAIL

NO SCALE

NOTES:

1. ROOM CONTROLLERS SHALL BE LOCATED ON CORRIDOR WALL ABOVE CEILING AND LOCATED NEAR THE DOOR INTO EACH ROOM THE CONTROLLER IS SERVING.
2. BASIS OF DESIGN MODEL NUMBERS ARE BASED UPON WATTSTOPPER (CONTACT GARY WRIGHT AT E.M.I. 586-484-1275). OTHER ACCEPTABLE MANUFACUTERS ARE LEVITON, SENSORSWITCH, AND GREENGATE.
3. PROGRAM LIGHTING ZONES AS INDICATED ON DRAWINGS.

WA

WAKELY ASSOCIATES, INC.
ARCHITECTS & ENGINEERS

30500 VAN DYKE AVE.
SUITE M-7
WARREN, MICHIGAN, 48093

TEL. 586-573-4100
FAX. 586-573-0822
E-MAIL: WA@WAKELYAIA.COM

Peter Basso Associates Inc
CONSULTING ENGINEERS
5145 Livernois, Suite 100
Troy, Michigan 48098-3276
Tel: 248-879-5666
Fax: 248-879-0007
www.PeterBassoAssociates.com
PBA Project No.: 2015-0144

FARMINGTON PUBLIC SCHOOLS - 2015 BOND
2018 PROJECTS
KENBROOK & BEECHVIEW ELEMENTARY SCHOOLS

BEECHVIEW ELEMENTARY SCHOOL

ELECTRICAL DETAILS

PRELIMINARY ☐
DESIGN DEVELOPMENT ☐
CONSTRUCTION ■
FINAL RECORD ☐

DRAWN BY: .
CHECKED BY: .

REVISIONS:

DATE: 12-15-17

SHEET NO.:

E7.2BV

JOB NO.: 171712A

g:\2015\2015-0144-00\Cad\beechview es\2015-0144-BV-E7-DT.dwg, E7.2BV, 12/12/2017 2:29:55 PM, Suha A. Matti, ,Default.pc3 ,0.09094, Peter Basso Associates Inc.

COMPOSITE FLOOR PLAN

SCALE: 1/16" = 1'-0"

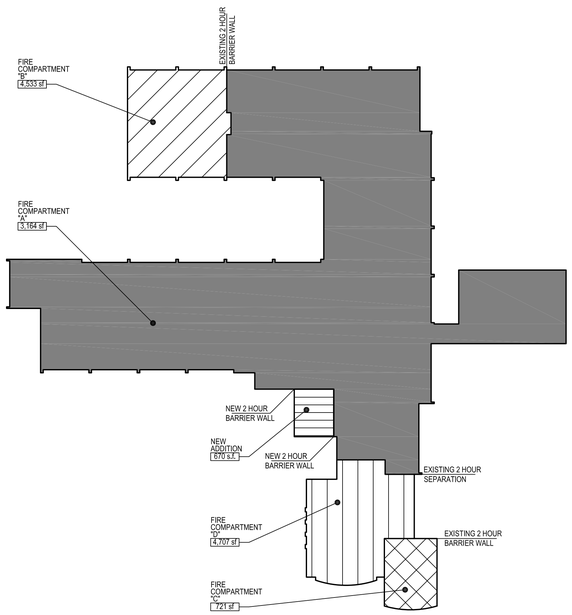

KEYPLAN

N.T.S.

BUILDING CODE SUMMARY

PROJECT: KENBROOK ELEMENTARY SCHOOL

ADDRESS 32130 BONNET HILL RD.
FARMINGTON HILLS, MI 48334

PROPOSED USE: K-12 EDUCATIONAL FACILITY

REFERENCE CODES:
NFPA: 101 LIFE SAFETY CODE, 2012 EDITION
BUILDING: 2015 MICHIGAN BUILDING CODE
MECHANICAL: 2015 MICHIGAN BUILDING CODE
PLUMBING: 2015 MICHIGAN BUILDING CODE
ELECTRICAL: 2014 MICHIGAN ELECTRICAL CODE
RENOVATION: 2015 MICHIGAN REHABILITATION CODE

BUILDING DATA

USE GROUP: E

( ) ASSEMBLY:_____
( ) BUSINESS
(X) EDUCATIONAL
( ) FACTORY-INDUSTRIAL-LOW HAZARD
( ) FACTORY-INDUSTRIAL-MODERATE HAZARD
( ) HIGH HAZARD:_____
( ) INSTITUTIONAL: 1-3 CONDITIONS IV
( ) MERCANTILE
( ) RESIDENTIAL:_____
( ) STORAGE-LOW HAZARD
( ) STORAGE-MODERATE HAZARD
( ) UTILITY, MISCELLANEOUS

CONSTRUCTION TYPE:

( ) TYPE 1A - PROTECTED
( ) TYPE 1B - PROTECTED
( ) TYPE 2A - PROTECTED
( ) TYPE 2B - PROTECTED
(X) TYPE 2C - UNPROTECTED
( ) TYPE 3 - PROTECTED
( ) TYPE 3 - UNPROTECTED
( ) TYPE 4 - HEAVY TIMBER
( ) TYPE 5 - PROTECTED
( ) TYPE 5 - UNPROTECTED

( ) MIXED CONSTRUCTION TYPE:_____

SPRINKLED? ( ) REQUIRED ( ) PROVIDED (X) PARTIAL

BUILDING HEIGHT PERMITTED: 55'
ACTUAL BUILDING HEIGHT: 21' (AT GYMNASIUM)
MEZZANINE: ( ) YES (X) NO

HIGH RISE: ( ) YES (X) NO

GROSS BUILDING AREA (EXISTING):

MAIN LEVEL EXIST: 35,223 S.F.

MAIN LEVEL ADDITION: 670 S.F.

MAIN LEVEL TOTAL AREA: 35,893 S.F.

LOWER LEVEL AREA: 13765 S.F.

TOTAL AREA: 49,658 S.F.

AREA MODIFICATION APPLIED?
( ) YES (X) NO

PERIMETER MODIFICATIONS APPLIED?
( ) YES (X) NO

LIFE SAFETY SYSTEMS

EMERGENCY LIGHTING AND EXIT SIGNS	(X) REQUIRED	(X) PROVIDED
FIRE ALARMS	(X) REQUIRED	(X) PROVIDED
SMOKE DETECTION SYSTEMS	(X) REQUIRED	(X) PROVIDED
PANIC HARDWARE	(X) REQUIRED	(X) PROVIDED
FIRE SUPPRESSION SYSTEM	( ) REQUIRED	( ) PROVIDED
STANDPIPE SYSTEM	( ) REQUIRED	( ) PROVIDED

EXIT REQUIREMENTS

DEAD END LIMIT-MAXIMUM CONDITION (1018.4):
ALLOWED: 20'
ACTUAL: 19'-4"

TRAVEL DISTANCE TO EXIT-MAXIMUM CONDITION (TABLE 1016.1):
ALLOWED: 200'
ACTUAL: -

COMMON PATH OF TRAVEL (1014.3):
ALLOWED: 75'
ACTUAL:

NUMBER OF EXITS (1021):
REQUIRED: 2
PROVIDED: 13

DESIGN LOADS: (SEE STRUCTURAL DRAWINGS)

LEGEND:

- EXISTING 2 HOUR RATED FIRE WALL CONSTRUCTION WITH 90 MINUTE OPENING PROTECTIVE.
- EXISTING 1 HOUR FIRE RATED SEPARATION WALL WITH 20 MINUTE DOOR OPENING PROTECTIVE.
- EXISTING 2 HOUR RATED FIRE SEPARATION WALL WITH 90 MIN OPENING PROTECTIVE
- EXTERIOR EGRESS EXIT
- NEW 1 HOUR FIRE RATED SEPARATION WALL WITH 20 MINUTE DOOR OPENING PROTECTIVE.
- NEW 2 HOUR RATED FIRE WALL CONSTRUCTION WITH 90 MINUTE OPENING PROTECTIVE.
- NEW ADDITION SEPARATED FROM EXISTING BUILDING BY 2 HOUR FIRE WALL CONSTRUCTION

WAKELY ASSOCIATES, INC.
ARCHITECTS

30500 VAN DYKE AVENUE
SUITE M-7
WARREN, MICHIGAN 48093
PH: 586.573.4100
FX: 586.573.0822
www.WakelyAIA.com

FARMINGTON PUBLIC SCHOOLS - 2015 BOND
2018 PROJECTS
KENBROOK & BEECHVIEW ELEMENTARY SCHOOLS

KENBROOK ELEMENTARY SCHOOL

COMPOSTIE FLOOR PLAN

PRELIMINARY ☐
DESIGN DEVELOPMENT ☐
CONSTRUCTION ☐
FINAL RECORD ■

DRAWN BY NJL
CHECKED BY BJS

REVISIONS

DATE: December 6, 2017

SHEET NO.

LS1.0KB

JOB NO. 171712A

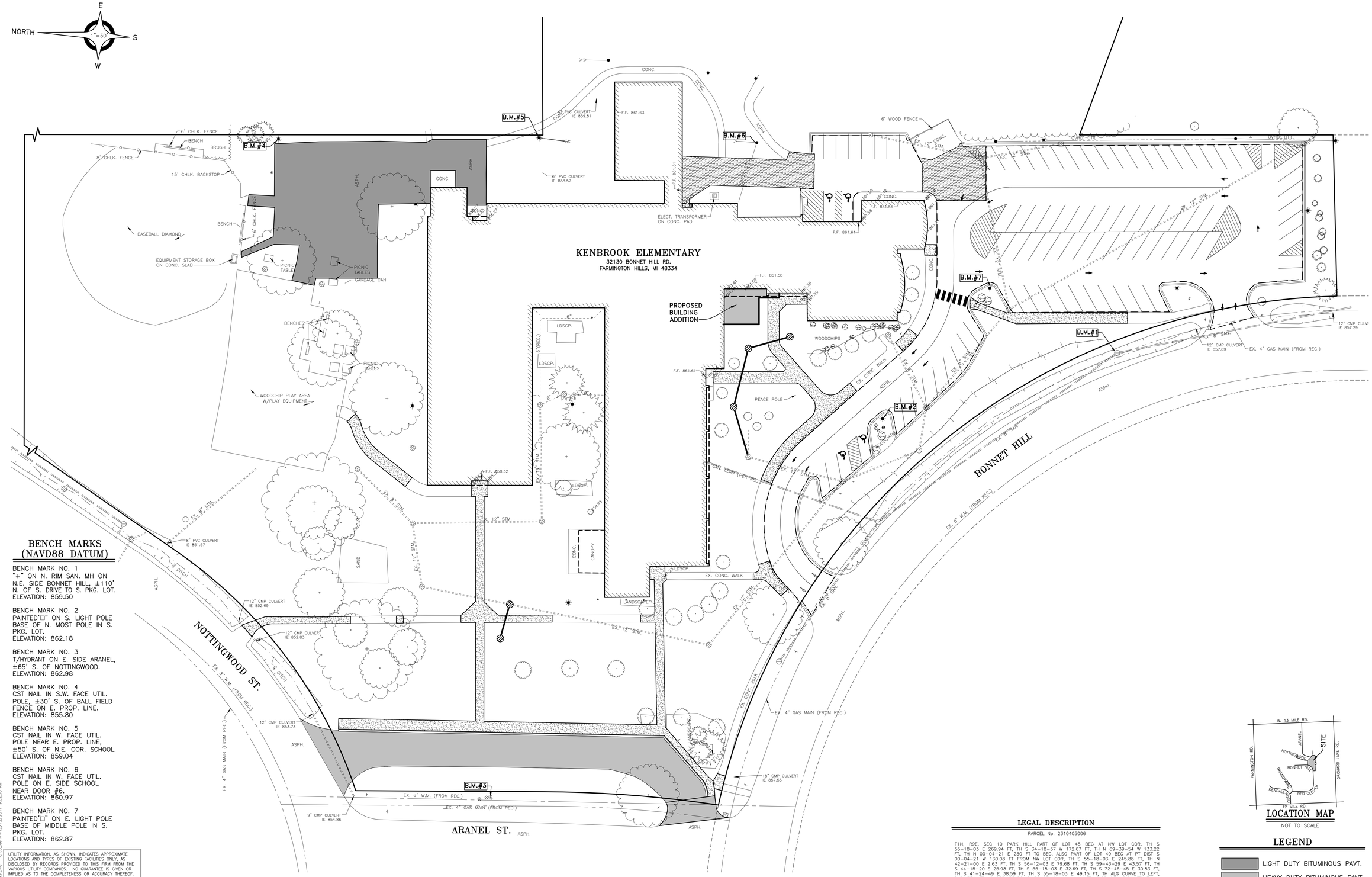

BENCH MARKS (NAVD88 DATUM)

BENCH MARK NO. 1
"+" ON N. RIM SAN. MH ON N.E. SIDE BONNET HILL, ±110' N. OF S. DRIVE TO S. PKG. LOT.
ELEVATION: 859.50

BENCH MARK NO. 2
PAINTED"□" ON S. LIGHT POLE BASE OF N. MOST POLE IN S. PKG. LOT.
ELEVATION: 862.18

BENCH MARK NO. 3
T/HYDRANT ON E. SIDE ARANEL, ±65' S. OF NOTTINGWOOD.
ELEVATION: 862.98

BENCH MARK NO. 4
CST NAIL IN S.W. FACE UTIL. POLE, ±30' S. OF BALL FIELD FENCE ON E. PROP. LINE.
ELEVATION: 855.80

BENCH MARK NO. 5
CST NAIL IN W. FACE UTIL. POLE NEAR E. PROP. LINE, ±50' S. OF N.E. COR. SCHOOL.
ELEVATION: 859.04

BENCH MARK NO. 6
CST NAIL IN W. FACE UTIL. POLE ON E. SIDE SCHOOL NEAR DOOR #6.
ELEVATION: 860.97

BENCH MARK NO. 7
PAINTED"□" ON E. LIGHT POLE BASE OF MIDDLE POLE IN S. PKG. LOT.
ELEVATION: 862.87

UTILITY INFORMATION, AS SHOWN, INDICATES APPROXIMATE LOCATIONS AND TYPES OF EXISTING FACILITIES ONLY, AS DISCLOSED BY RECORDS PROVIDED TO THIS FIRM FROM THE VARIOUS UTILITY COMPANIES. NO GUARANTEE IS GIVEN OR IMPLIED AS TO THE COMPLETENESS OR ACCURACY THEREOF.

PRIOR TO CONSTRUCTION, ALL LOCATIONS AND DEPTHS OF EXISTING OVERHEAD AND UNDERGROUND UTILITIES (IN CONFLICT WITH THE CONSTRUCTION OF THESE PROPOSED IMPROVEMENTS) SHALL BE VERIFIED IN THE FIELD. DURING THE CONSTRUCTION, THE CONTRACTOR SHALL PROTECT AND SUPPORT ALL UTILITIES THAT ARE ENCOUNTERED. (ALL COSTS FOR UTILITY LOCATION VERIFICATION, SUPPORT AND PROTECTION SHALL BE INCLUDED IN THE PROPOSED PAY ITEM CONFLICTING WITH THAT UTILITY).

DURING CONSTRUCTION, THE CONTRACTOR SHALL USE EXTREME CAUTION WHEN OPERATING NEAR ANY AND ALL OVERHEAD AND / OR BURIED UTILITIES.

3 WORKING DAYS BEFORE YOU DIG

CALL MISS DIG 811 TOLL FREE

M:\0377\0577-0102\DWG\CIVIL\01_ENGR\ENG.DWG C1.0_Gen--12/12/2017 9:02:53 AM

LEGAL DESCRIPTION

PARCEL No. 2310405006

T1N, R9E, SEC 10 PARK HILL PART OF LOT 48 BEG AT NW LOT COR, TH S 55-18-03 E 269.94 FT, TH S 34-18-37 W 172.67 FT, TH N 69-39-54 W 133.22 FT, TH N 00-04-21 E 250 FT TO BEG, ALSO PART OF LOT 49 BEG AT PT DIST S 00-04-21 W 130.08 FT FROM NW LOT COR, TH S 55-18-03 E 245.88 FT, TH N 42-21-00 E 2.63 FT, TH S 56-12-03 E 79.68 FT, TH S 59-43-29 E 43.57 FT, TH S 44-15-20 E 25.98 FT, TH S 55-18-03 E 32.69 FT, TH S 72-46-45 E 30.83 FT, TH S 41-24-49 E 38.59 FT, TH S 55-18-03 E 49.15 FT, TH ALG CURVE TO LEFT, RAD 351 FT, CHORD BEARS S 32-27-24 W 12.01 FT, DIST OF 12.01 FT, TH N 55-18-03 W 544.87 FT, TH N 00-04-21 E 14.58 FT TO BEG, ALSO PART OF LOT 49 BEG AT NW LOT COR, TH N 89-52-30 E 200 FT, TH S 39-27-36 E 185.57 FT, TH S 42-21-00 W 172.13 FT, TH N 55-18-03 W 245.88 FT, TH N 00-04-21 E 130.08 FT TO BEG, ALSO OUTLOT C OF "KENDALLWOOD NO 3", ALSO PART OF NW 1/4 BEG AT NW COR OF "PARKHILL" SUB, TH N 89-52-38 W 465.01 FT, TH N 00-27-25 E 132.57 FT, TH ALG CURVE TO LEFT, RAD 333 FT, CHORD BEARS N 53-24-53 E 210.46 FT, DIST OF 214.13 FT, TH N 34-57-05 E 189.40 FT, TH ALG CURVE TO LEFT, RAD 320 FT, CHORD BEARS N 28-12-22 E 75.18 FT, DIST OF 75.35 FT, TH S 89-46-25 E 152.52 FT, TH S 00-11-25 W 479.89 FT TO BEG 1-12-98 FR 001, 277-004, 426-001, 008 & 024

SUBJECT TO ANY AND ALL EASEMENTS AND RIGHTS OF WAY OF RECORD OR OTHERWISE.

FROM TAX RECORDS ONLY, NO FIELD SURVEY PERFORMED.

LOCATION MAP

NOT TO SCALE

LEGEND

- LIGHT DUTY BITUMINOUS PAVT.
- HEAVY DUTY BITUMINOUS PAVT.
- 8" CONC. PAVT.
- 2" BITUMINOUS OVERLAY
- 4" CONCRETE SIDEWALK
- 6" HIGH CURB FACED WALK
- SEALCOAT LIMITS
- F-2 CONC. CURB & GUTTER

WAKELY ASSOCIATES, INC.
ARCHITECTS

30500 VAN DYKE AVENUE
SUITE M-7
WARREN, MICHIGAN 48093
PH: 586.573.4100
FX: 586.573.0822
www.WakelyAIA.com

ANDERSON, ECKSTEIN AND WESTRICK INC.
51301 Schoenherr Road,
Shelby Township, Michigan 48315
Phone 586-726-1234
Fax 586-726-8790
AEW NO. 0577-0102

FARMINGTON PUBLIC SCHOOLS
2017 RENOVATIONS
KENBROOK ELEMENTARY RENOVATIONS

GENERAL PLAN

PRELIMINARY ☐
DESIGN DEVELOPMENT ■
CONSTRUCTION ☐
FINAL RECORD ☐

DRAWN BY KJP
CHECKED BY JS

REVISIONS
1/12/2017 PRELIMINARY BID
3/10/2017 SCOPING DOCS
12/13/17 BID SET

DATE: OCTOBER 25, 2017

SHEET NO.
C1.0

JOB NO.

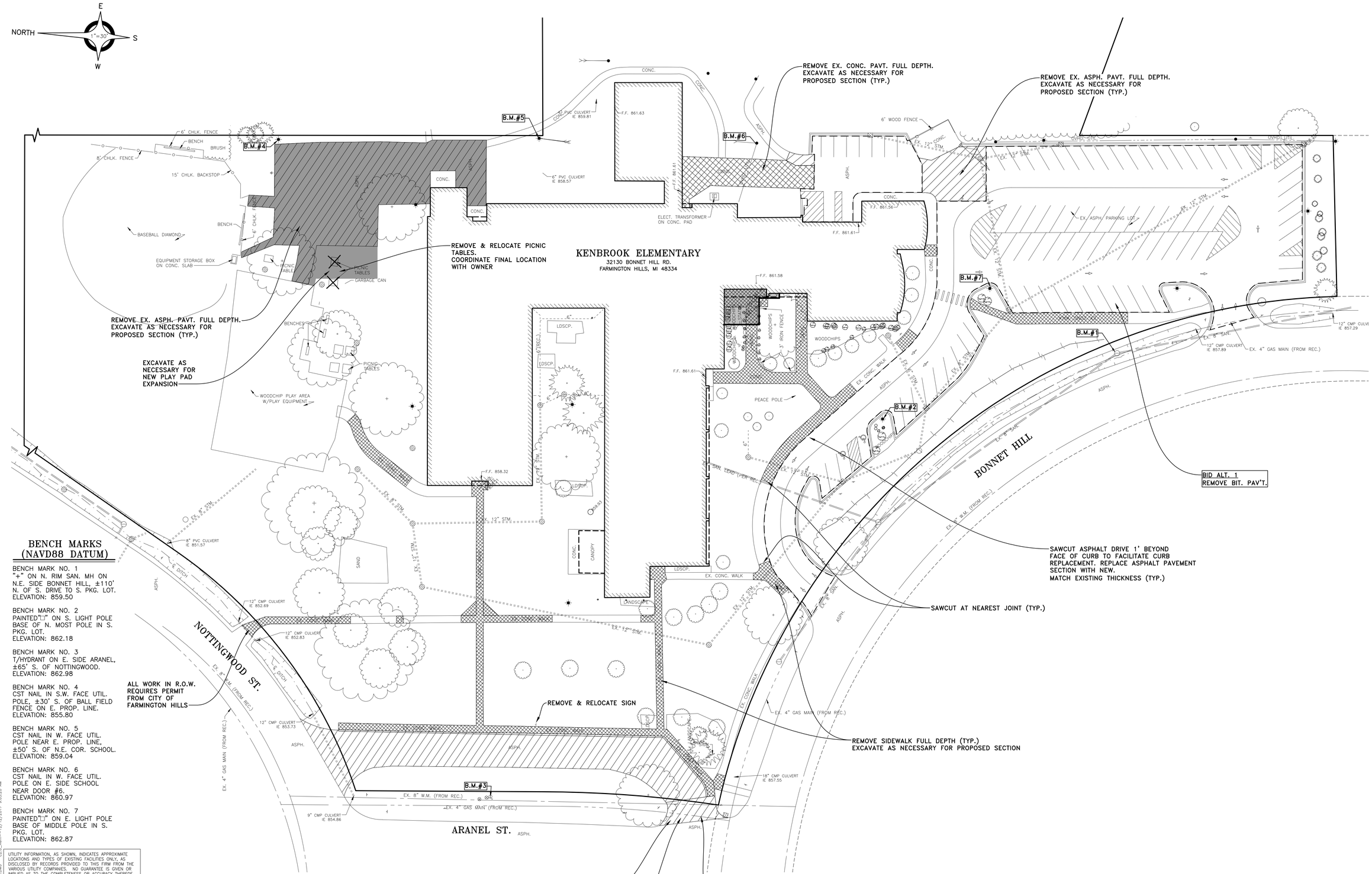

BENCH MARKS (NAVD88 DATUM)

BENCH MARK NO. 1
"+" ON N. RIM SAN. MH ON N.E. SIDE BONNET HILL, ±110' N. OF S. DRIVE TO S. PKG. LOT.
ELEVATION: 859.50

BENCH MARK NO. 2
PAINTED"□" ON S. LIGHT POLE BASE OF N. MOST POLE IN S. PKG. LOT.
ELEVATION: 862.18

BENCH MARK NO. 3
T/HYDRANT ON E. SIDE ARANEL, ±65' S. OF NOTTINGWOOD.
ELEVATION: 862.98

BENCH MARK NO. 4
CST NAIL IN S.W. FACE UTIL. POLE, ±30' S. OF BALL FIELD FENCE ON E. PROP. LINE.
ELEVATION: 855.80

BENCH MARK NO. 5
CST NAIL IN W. FACE UTIL. POLE NEAR E. PROP. LINE, ±50' S. OF N.E. COR. SCHOOL.
ELEVATION: 859.04

BENCH MARK NO. 6
CST NAIL IN W. FACE UTIL. POLE ON E. SIDE SCHOOL NEAR DOOR #6.
ELEVATION: 860.97

BENCH MARK NO. 7
PAINTED"□" ON E. LIGHT POLE BASE OF MIDDLE POLE IN S. PKG. LOT.
ELEVATION: 862.87

UTILITY INFORMATION, AS SHOWN, INDICATES APPROXIMATE LOCATIONS AND TYPES OF EXISTING FACILITIES ONLY, AS DISCLOSED BY RECORDS PROVIDED TO THIS FIRM FROM THE VARIOUS UTILITY COMPANIES. NO GUARANTEE IS GIVEN OR IMPLIED AS TO THE COMPLETENESS OR ACCURACY THEREOF.

PRIOR TO CONSTRUCTION, ALL LOCATIONS AND DEPTHS OF EXISTING OVERHEAD AND UNDERGROUND UTILITIES (IN CONFLICT WITH THE CONSTRUCTION OF THESE PROPOSED IMPROVEMENTS) SHALL BE VERIFIED IN THE FIELD. DURING THE CONSTRUCTION, THE CONTRACTOR SHALL PROTECT AND SUPPORT ALL UTILITIES THAT ARE ENCOUNTERED. (ALL COSTS FOR UTILITY LOCATION VERIFICATION, SUPPORT AND PROTECTION SHALL BE INCLUDED IN THE PROPOSED PAY ITEM CONFLICTING WITH THAT UTILITY).

DURING CONSTRUCTION, THE CONTRACTOR SHALL USE EXTREME CAUTION WHEN OPERATING NEAR ANY AND ALL OVERHEAD AND / OR BURIED UTILITIES.

3 WORKING DAYS BEFORE YOU DIG

CALL MISS DIG 811 TOLL FREE

M:\0577\0577-0102\DWG\CIVIL\C02_ENGPLANS.DWG C2.0_Item---12/12/2017 9:03:20 AM

LEGEND

- REMOVE EXIST. BITUMINOUS PAVT.
- REMOVE EXIST. CONC. WALK
- REMOVE EXIST. CONC. PAVT.
- MILL TOP 2" OF EX. PAVT.

WA
WAKELY ASSOCIATES, INC.
ARCHITECTS

30500 VAN DYKE AVENUE
SUITE M-7
WARREN, MICHIGAN 48093
PH: 586.573.4100
FX: 586.573.0822
www.WakelyAIA.com

ANDERSON, ECKSTEIN AND WESTRICK INC.
51301 Schoenherr Road,
Shelby Township, Michigan 48315
Phone 586-726-1234
Fax 586-726-8700
AEW NO. 0577-0102

FARMINGTON PUBLIC SCHOOLS
2017 RENOVATIONS
KENBROOK ELEMENTARY RENOVATIONS

REMOVAL PLAN

PRELIMINARY ☐
DESIGN DEVELOPMENT ■
CONSTRUCTION ☐
FINAL RECORD ☐

DRAWN BY KJP
CHECKED BY JS

REVISIONS
1/12/2017 PRELIMINARY BID
12/05/17 SCOPING INDEX
12/13/17 BID SET

DATE: OCTOBER 25, 2017

SHEET NO.
C2.0

JOB NO.

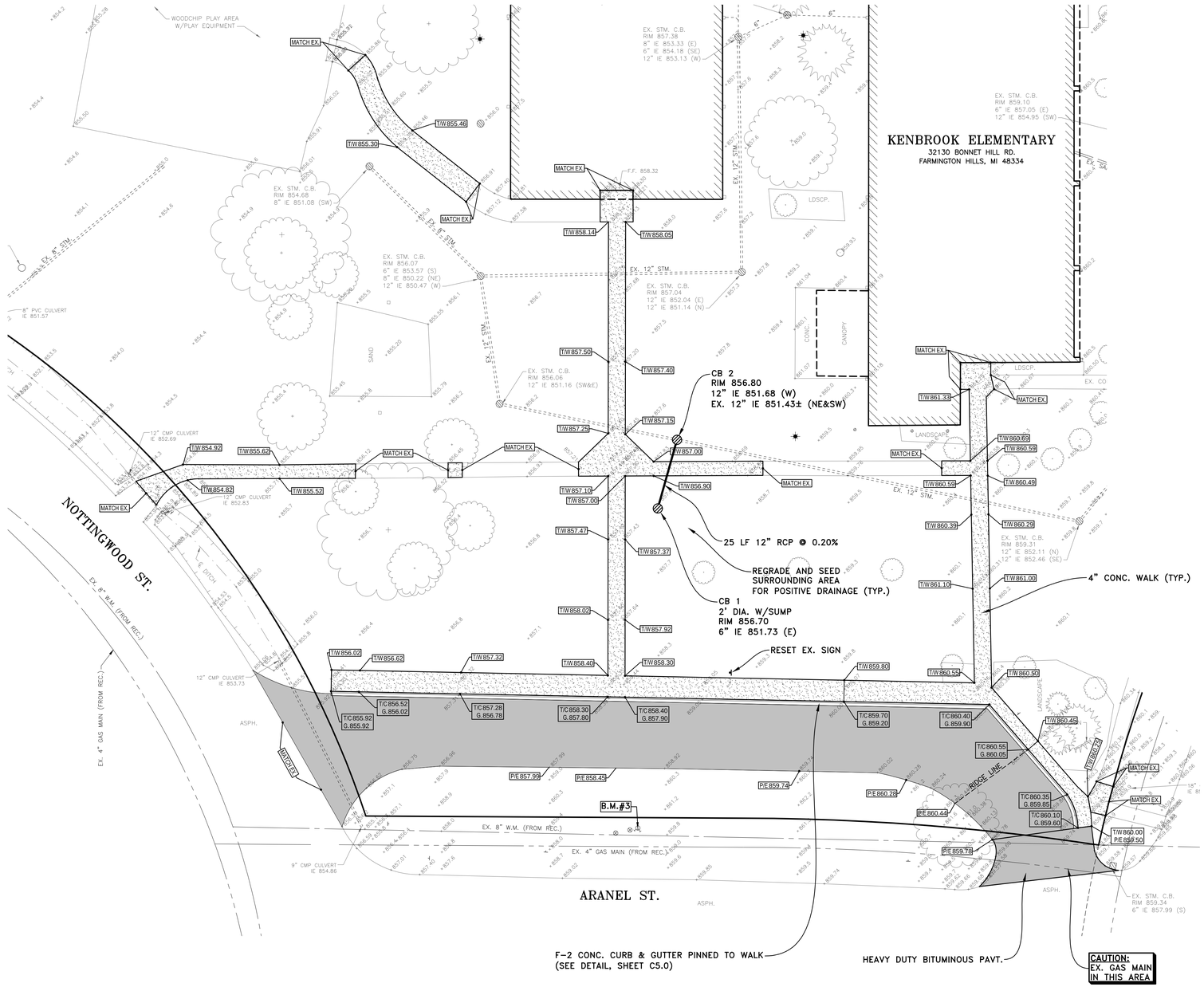

BENCH MARKS (NAVD88 DATUM)

BENCH MARK NO. 1
"+" ON N. RIM SAN. MH ON N.E. SIDE BONNET HILL, ±110' N. OF S. DRIVE TO S. PKG. LOT.
ELEVATION: 859.50

BENCH MARK NO. 2
PAINTED"□" ON S. LIGHT POLE BASE OF N. MOST POLE IN S. PKG. LOT.
ELEVATION: 862.18

BENCH MARK NO. 3
T/HYDRANT ON E. SIDE ARANEL, ±65' S. OF NOTTINGWOOD.
ELEVATION: 862.98

BENCH MARK NO. 4
CST NAIL IN S.W. FACE UTIL. POLE, ±30' S. OF BALL FIELD FENCE ON E. PROP. LINE.
ELEVATION: 855.80

BENCH MARK NO. 5
CST NAIL IN W. FACE UTIL. POLE NEAR E. PROP. LINE, ±50' S. OF N.E. COR. SCHOOL.
ELEVATION: 859.04

BENCH MARK NO. 6
CST NAIL IN W. FACE UTIL. POLE ON E. SIDE SCHOOL NEAR DOOR #6.
ELEVATION: 860.97

BENCH MARK NO. 7
PAINTED"□" ON E. LIGHT POLE BASE OF MIDDLE POLE IN S. PKG. LOT.
ELEVATION: 862.87

UTILITY INFORMATION, AS SHOWN, INDICATES APPROXIMATE LOCATIONS AND TYPES OF EXISTING FACILITIES ONLY, AS DISCLOSED BY RECORDS PROVIDED TO THIS FIRM FROM THE VARIOUS UTILITY COMPANIES. NO GUARANTEE IS GIVEN OR IMPLIED AS TO THE COMPLETENESS OR ACCURACY THEREOF.

PRIOR TO CONSTRUCTION, ALL LOCATIONS AND DEPTHS OF EXISTING OVERHEAD AND UNDERGROUND UTILITIES (IN CONFLICT WITH THE CONSTRUCTION OF THESE PROPOSED IMPROVEMENTS) SHALL BE VERIFIED IN THE FIELD. DURING THE CONSTRUCTION, THE CONTRACTOR SHALL PROTECT AND SUPPORT ALL UTILITIES THAT ARE ENCOUNTERED. (ALL COSTS FOR UTILITY LOCATION VERIFICATION, SUPPORT AND PROTECTION SHALL BE INCLUDED IN THE PROPOSED PAY ITEM CONFLICTING WITH THAT UTILITY).

DURING CONSTRUCTION, THE CONTRACTOR SHALL USE EXTREME CAUTION WHEN OPERATING NEAR ANY AND ALL OVERHEAD AND / OR BURIED UTILITIES.

3 WORKING DAYS BEFORE YOU DIG

CALL MISS DIG 811 TOLL FREE

PAVING LEGEND

- HEAVY DUTY BITUMINOUS PAVT.
- 8" CONC. PAVT.
- 2" BITUMINOUS OVERLAY
- 4" CONCRETE SIDEWALK 6" HIGH CURB FACED WALK
- 620.00 PROPOSED GRADE
- FLOW ARROW
- 000.00 EXIST. GRADE
- T/A TOP ASPHALT
- T/C TOP CONC. CURB
- T/W TOP CONC. WALK
- G. TOP CONC. GUTTER
- P/E PAVEMENT ELEVATION
- F-2 CONC. CURB & GUTTER
- SEALCOAT LIMITS

WAKELY ASSOCIATES, INC.
ARCHITECTS

30500 VAN DYKE AVENUE
SUITE M-7
WARREN, MICHIGAN 48093
PH: 586.573.4100
FX: 586.573.0822
www.WakelyAIA.com

ANDERSON, ECKSTEIN AND WESTRICK INC.
51301 Schoenherr Road,
Shelby Township, Michigan 48315
Phone 586-726-1234
Fax 586-726-8790
AEW NO. 0577-0102

FARMINGTON PUBLIC SCHOOLS
2017 RENOVATIONS
KENBROOK ELEMENTARY RENOVATIONS

CONSTRUCTION PLAN

PRELIMINARY ☐
DESIGN DEVELOPMENT ■
CONSTRUCTION ☐
FINAL RECORD ☐

DRAWN BY KJP
CHECKED BY JS

REVISIONS
11/22/17 PRELIMINARY BID
12/08/17 SCOPING DOCS
12/13/17 BID SET

DATE: OCTOBER 25, 2017

SHEET NO.
C3.0

JOB NO.

M:\0577\0577-0102\DWG\CIVIL\C03_ENGPLANS.DWG C3.0_Const 1--12/13/2017 9:18:57 AM

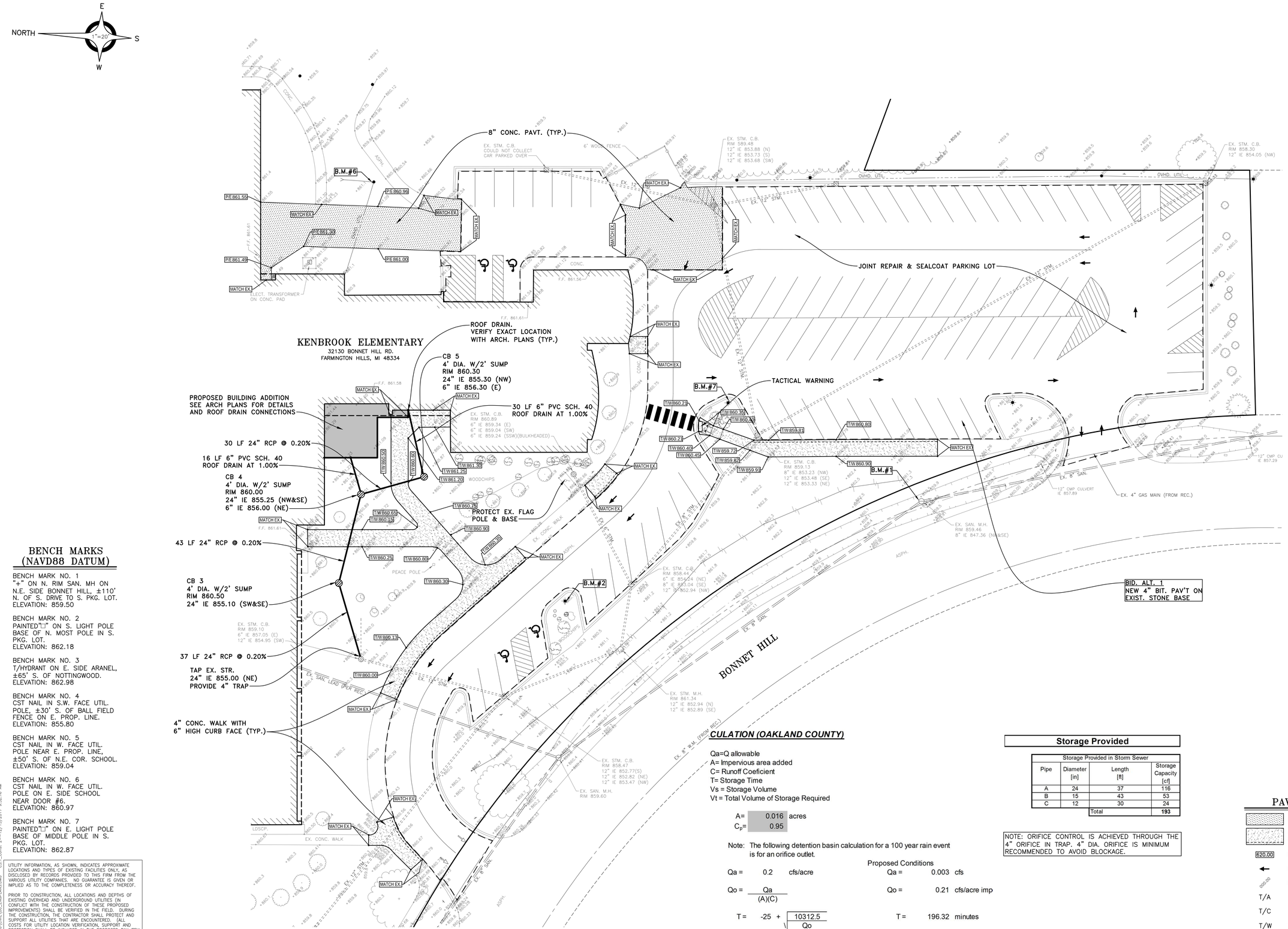

BENCH MARKS (NAVD88 DATUM)

BENCH MARK NO. 1
"+" ON N. RIM SAN. MH ON N.E. SIDE BONNET HILL, ±110' N. OF S. DRIVE TO S. PKG. LOT.
ELEVATION: 859.50

BENCH MARK NO. 2
PAINTED"□" ON S. LIGHT POLE BASE OF N. MOST POLE IN S. PKG. LOT.
ELEVATION: 862.18

BENCH MARK NO. 3
T/HYDRANT ON E. SIDE ARANEL, ±65' S. OF NOTTINGWOOD.
ELEVATION: 862.98

BENCH MARK NO. 4
CST NAIL IN S.W. FACE UTIL. POLE, ±30' S. OF BALL FIELD FENCE ON E. PROP. LINE.
ELEVATION: 855.80

BENCH MARK NO. 5
CST NAIL IN W. FACE UTIL. POLE NEAR E. PROP. LINE, ±50' S. OF N.E. COR. SCHOOL.
ELEVATION: 859.04

BENCH MARK NO. 6
CST NAIL IN W. FACE UTIL. POLE ON E. SIDE SCHOOL NEAR DOOR #6.
ELEVATION: 860.97

BENCH MARK NO. 7
PAINTED"□" ON E. LIGHT POLE BASE OF MIDDLE POLE IN S. PKG. LOT.
ELEVATION: 862.87

UTILITY INFORMATION, AS SHOWN, INDICATES APPROXIMATE LOCATIONS AND TYPES OF EXISTING FACILITIES ONLY, AS DISCLOSED BY RECORDS PROVIDED TO THIS FIRM FROM THE VARIOUS UTILITY COMPANIES. NO GUARANTEE IS GIVEN OR IMPLIED AS TO THE COMPLETENESS OR ACCURACY THEREOF.

PRIOR TO CONSTRUCTION, ALL LOCATIONS AND DEPTHS OF EXISTING OVERHEAD AND UNDERGROUND UTILITIES (IN CONFLICT WITH THE CONSTRUCTION OF THESE PROPOSED IMPROVEMENTS) SHALL BE VERIFIED IN THE FIELD. DURING THE CONSTRUCTION, THE CONTRACTOR SHALL PROTECT AND SUPPORT ALL UTILITIES THAT ARE ENCOUNTERED. (ALL COSTS FOR UTILITY LOCATION VERIFICATION, SUPPORT AND PROTECTION SHALL BE INCLUDED IN THE PROPOSED PAY ITEM CONFLICTING WITH THAT UTILITY).

DURING CONSTRUCTION, THE CONTRACTOR SHALL USE EXTREME CAUTION WHEN OPERATING NEAR ANY AND ALL OVERHEAD AND / OR BURIED UTILITIES.

3 WORKING DAYS BEFORE YOU DIG

CALL MISS DIG 811 TOLL FREE

M:\2017\2017-0102\DWG\CIVIL\06_ENGPLANS.DWG C3.1_Const 2---12/13/2017 8:52:16 AM

CULATION (OAKLAND COUNTY)

Qa=Q allowable
A= Impervious area added
C= Runoff Coeficient
T= Storage Time
Vs = Storage Volume
Vt = Total Volume of Storage Required

A= 0.016 acres
C_p= 0.95

Note: The following detention basin calculation for a 100 year rain event is for an orifice outlet.

Qa =	0.2	cfs/acre	Qa =	0.003	cfs
Qo =	$\frac{Qa}{(A)(C)}$		Qo =	0.21	cfs/acre imp
T =	$-25 + \sqrt{\frac{10312.5}{Qo}}$		T =	196.32	minutes
Vs =	$\frac{(16500)(T)}{(T+25)} - (40)(Qo)(T)$		Vs =	12,983	cubic feet
Vt =	(Vs)(A)(C)		Vt =	193	cubic feet

Storage Provided

Storage Provided in Storm Sewer

Pipe	Diameter [in]	Length [ft]	Storage Capacity [cf]
A	24	37	116
B	15	43	53
C	12	30	24
		Total	**193**

NOTE: ORIFICE CONTROL IS ACHIEVED THROUGH THE 4" ORIFICE IN TRAP. 4" DIA. ORIFICE IS MINIMUM RECOMMENDED TO AVOID BLOCKAGE.

PAVING LEGEND

- 8" CONC. PAVT.
- 4" CONCRETE SIDEWALK 6" HIGH CURB FACED WALK
- 620.00 PROPOSED GRADE
- FLOW ARROW
- 000.00 EXIST. GRADE
- T/A TOP ASPHALT
- T/C TOP CONC. CURB
- T/W TOP CONC. WALK
- G. TOP CONC. GUTTER
- P/E PAVEMENT ELEVATION
- SEALCOAT LIMITS

WAKELY ASSOCIATES, INC.
ARCHITECTS

30500 VAN DYKE AVENUE
SUITE M-7
WARREN, MICHIGAN 48093
PH: 586.573.4100
FX: 586.573.0822
www.WakelyAIA.com

ANDERSON, ECKSTEIN AND WESTRICK INC.
51301 Schoenherr Road,
Shelby Township, Michigan 48315
Phone 586-726-1234
Fax 586-726-8790
AEW NO. 0577-0102

FARMINGTON PUBLIC SCHOOLS
2017 RENOVATIONS
KENBROOK ELEMENTARY RENOVATIONS

CONSTRUCTION PLAN

PRELIMINARY ☐
DESIGN DEVELOPMENT ■
CONSTRUCTION ☐
FINAL RECORD ☐

DRAWN BY KJP
CHECKED BY JS

REVISIONS
11/22/17 PRELIMINARY BID
10/06/17 SCOPING DOCS.
12/13/17 BID SET

DATE: OCTOBER 25, 2017

SHEET NO.
C3.1

JOB NO.

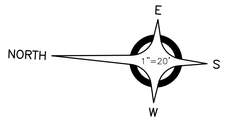

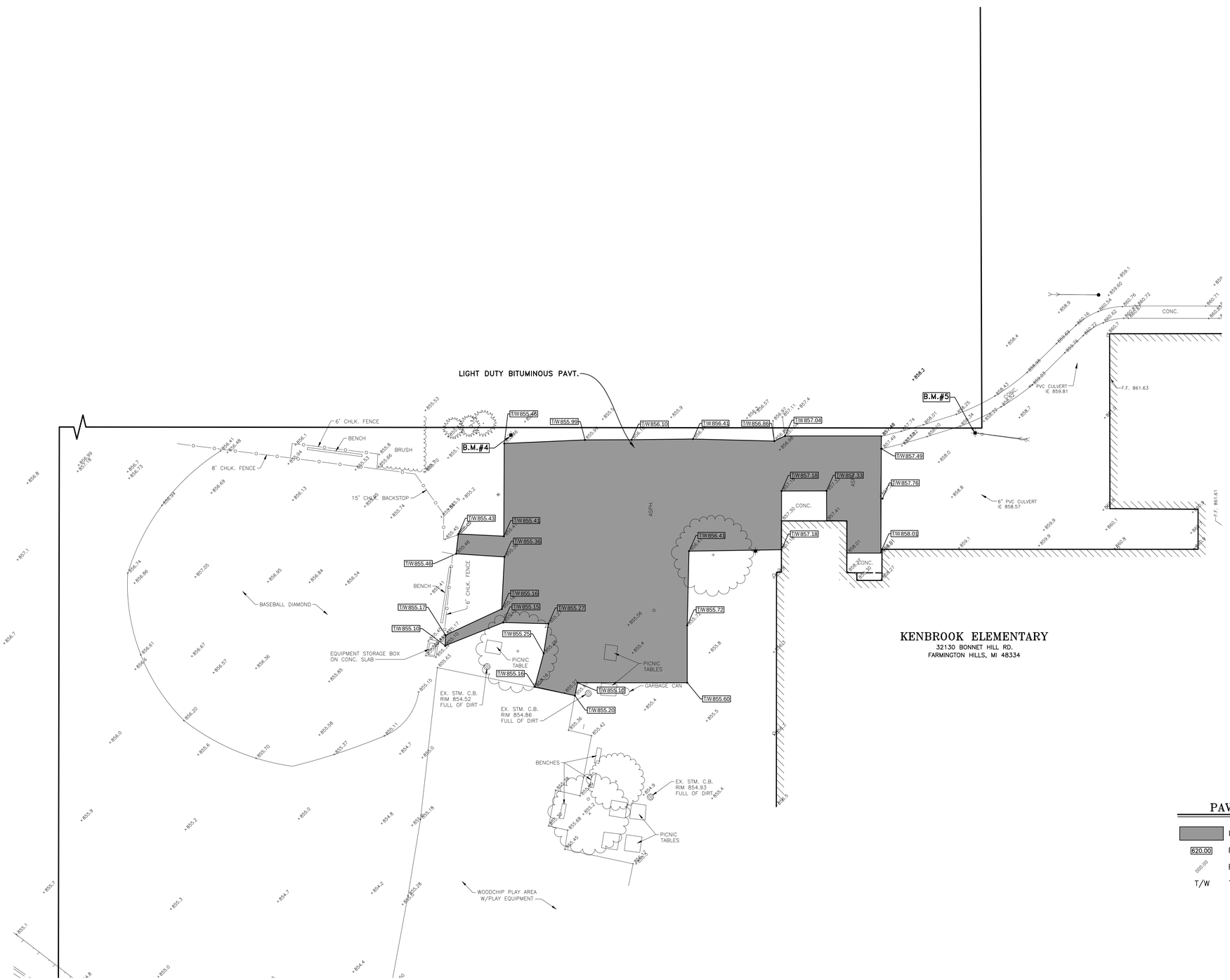

KENBROOK ELEMENTARY
32130 BONNET HILL RD.
FARMINGTON HILLS, MI 48334

BENCH MARKS (NAVD88 DATUM)

BENCH MARK NO. 1
"+" ON N. RIM SAN. MH ON N.E. SIDE BONNET HILL, ±110' N. OF S. DRIVE TO S. PKG. LOT.
ELEVATION: 859.50

BENCH MARK NO. 2
PAINTED"□" ON S. LIGHT POLE BASE OF N. MOST POLE IN S. PKG. LOT.
ELEVATION: 862.18

BENCH MARK NO. 3
T/HYDRANT ON E. SIDE ARANEL, ±65' S. OF NOTTINGWOOD.
ELEVATION: 862.98

BENCH MARK NO. 4
CST NAIL IN S.W. FACE UTIL. POLE, ±30' S. OF BALL FIELD FENCE ON E. PROP. LINE.
ELEVATION: 855.80

BENCH MARK NO. 5
CST NAIL IN W. FACE UTIL. POLE NEAR E. PROP. LINE, ±50' S. OF N.E. COR. SCHOOL.
ELEVATION: 859.04

BENCH MARK NO. 6
CST NAIL IN W. FACE UTIL. POLE ON E. SIDE SCHOOL NEAR DOOR #6.
ELEVATION: 860.97

BENCH MARK NO. 7
PAINTED"□" ON E. LIGHT POLE BASE OF MIDDLE POLE IN S. PKG. LOT.
ELEVATION: 862.87

UTILITY INFORMATION, AS SHOWN, INDICATES APPROXIMATE LOCATIONS AND TYPES OF EXISTING FACILITIES ONLY, AS DISCLOSED BY RECORDS PROVIDED TO THIS FIRM FROM THE VARIOUS UTILITY COMPANIES. NO GUARANTEE IS GIVEN OR IMPLIED AS TO THE COMPLETENESS OR ACCURACY THEREOF.

PRIOR TO CONSTRUCTION, ALL LOCATIONS AND DEPTHS OF EXISTING OVERHEAD AND UNDERGROUND UTILITIES (IN CONFLICT WITH THE CONSTRUCTION OF THESE PROPOSED IMPROVEMENTS) SHALL BE VERIFIED IN THE FIELD. DURING THE CONSTRUCTION, THE CONTRACTOR SHALL PROTECT AND SUPPORT ALL UTILITIES THAT ARE ENCOUNTERED. (ALL COSTS FOR UTILITY LOCATION VERIFICATION, SUPPORT AND PROTECTION SHALL BE INCLUDED IN THE PROPOSED PAY ITEM CONFLICTING WITH THAT UTILITY).

DURING CONSTRUCTION, THE CONTRACTOR SHALL USE EXTREME CAUTION WHEN OPERATING NEAR ANY AND ALL OVERHEAD AND / OR BURIED UTILITIES.

3 WORKING DAYS BEFORE YOU DIG

CALL MISS DIG 811 TOLL FREE

PAVING LEGEND

	LIGHT DUTY BITUMINOUS PAVT.
620.00	PROPOSED GRADE
000.00	EXIST. GRADE
T/W	TOP CONC. WALK

WAKELY ASSOCIATES, INC.
ARCHITECTS

30500 VAN DYKE AVENUE
SUITE M-7
WARREN, MICHIGAN 48093
PH: 586.573.4100
FX: 586.573.0822
www.WakelyAIA.com

ANDERSON, ECKSTEIN AND WESTRICK INC.
51301 Schoenherr Road,
Shelby Township, Michigan 48315
Phone: 586-726-1234
Fax: 586-726-8790
AEW NO. 0577-0102

FARMINGTON PUBLIC SCHOOLS
2017 RENOVATIONS
KENBROOK ELEMENTARY RENOVATIONS

CONSTRUCTION PLAN

PRELIMINARY ☐
DESIGN DEVELOPMENT ■
CONSTRUCTION ☐
FINAL RECORD ☐

DRAWN BY KJP
CHECKED BY JS

REVISIONS
11/22/17 PRELIMINARY BID
10/06/17 SCOPING DOCS
12/13/17 BID SET

DATE: OCTOBER 25, 2017

SHEET NO.
C3.2

JOB NO.

M:\0577\0577-0102\DWG\CIVIL\05_ENGPLANS.DWG C3.2_Const 3---12/12/2017 9:04:37 AM

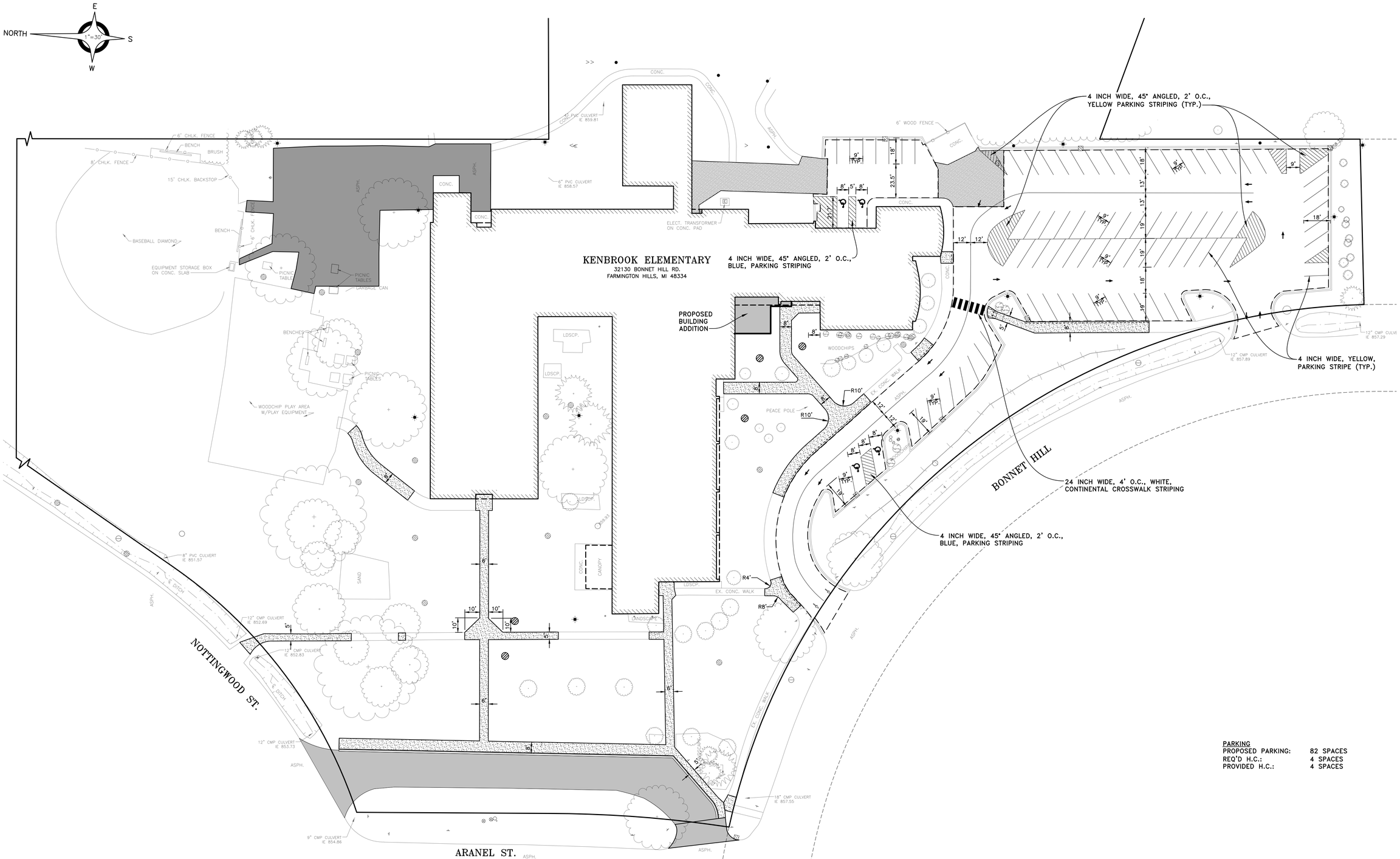

PARKING

PROPOSED PARKING:	82 SPACES
REQ'D H.C.:	4 SPACES
PROVIDED H.C.:	4 SPACES

LEGEND

- HEAVY DUTY BITUMINOUS PAVT.
- 8" CONC. PAVT.
- 2" BITUMINOUS OVERLAY
- 4" CONCRETE SIDEWALK
  6" HIGH CURB FACED WALK
- SEALCOAT LIMITS
- F-2 CONC. CURB & GUTTER

UTILITY INFORMATION, AS SHOWN, INDICATES APPROXIMATE LOCATIONS AND TYPES OF EXISTING FACILITIES ONLY, AS DISCLOSED BY RECORDS PROVIDED TO THIS FIRM FROM THE VARIOUS UTILITY COMPANIES. NO GUARANTEE IS GIVEN OR IMPLIED AS TO THE COMPLETENESS OR ACCURACY THEREOF.

PRIOR TO CONSTRUCTION, ALL LOCATIONS AND DEPTHS OF EXISTING OVERHEAD AND UNDERGROUND UTILITIES (IN CONFLICT WITH THE CONSTRUCTION OF THESE PROPOSED IMPROVEMENTS) SHALL BE VERIFIED IN THE FIELD. DURING THE CONSTRUCTION, THE CONTRACTOR SHALL PROTECT AND SUPPORT ALL UTILITIES THAT ARE ENCOUNTERED. (ALL COSTS FOR UTILITY LOCATION VERIFICATION, SUPPORT AND PROTECTION SHALL BE INCLUDED IN THE PROPOSED PAY ITEM CONFLICTING WITH THAT UTILITY).

DURING CONSTRUCTION, THE CONTRACTOR SHALL USE EXTREME CAUTION WHEN OPERATING NEAR ANY AND ALL OVERHEAD AND / OR BURIED UTILITIES.

3 WORKING DAYS BEFORE YOU DIG

CALL MISS DIG 811 TOLL FREE

M:\0577\0577-0102\DWG\CD4\C0_INDPLANS.DWG C4.0_Dev--12/12/2017 9:05:00 AM

WAKELY ASSOCIATES, INC.
ARCHITECTS

30500 VAN DYKE AVENUE
SUITE M-7
WARREN, MICHIGAN 48093
PH: 586.573.4100
FX: 586.573.0822
www.WakelyAIA.com

ANDERSON, ECKSTEIN AND WESTRICK INC.
51301 Schoenherr Road,
Shelby Township, Michigan 48315
Phone 586-726-1234
Fax 586-726-8790
AEW NO. 0577-0102

FARMINGTON PUBLIC SCHOOLS
2017 RENOVATIONS
KENBROOK ELEMENTARY RENOVATIONS

GEOMETRICS AND STRIPING PLAN

PRELIMINARY ☐
DESIGN DEVELOPMENT ■
CONSTRUCTION ☐
FINAL RECORD ☐

DRAWN BY KJP
CHECKED BY JS

REVISIONS

11/22/17	PRELIMINARY BID
12/08/17	SCOPING DOCS
12/13/17	BID SET

DATE: OCTOBER 25, 2017

SHEET NO.
C4.0

JOB NO.

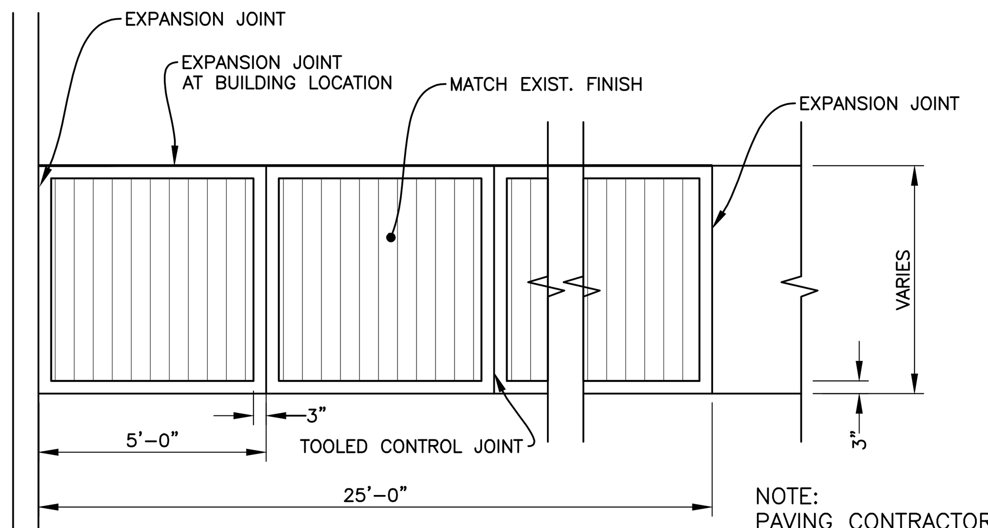

NOTE:
PAVING CONTRACTOR TO JOINT PAVEMENT AS PER INDUSTRY STANDARDS.

TYPICAL SIDEWALK JOINTING AND FINISH
NOT TO SCALE

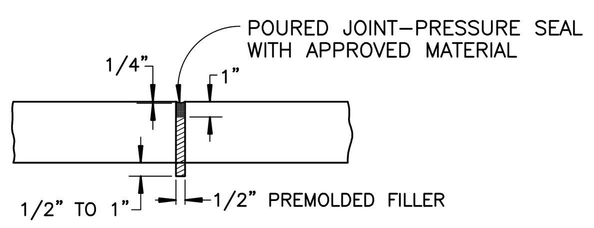

EXPANSION JOINT
NOT TO SCALE

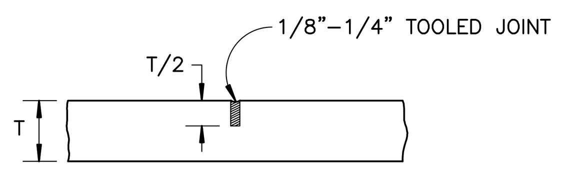

CONTRACTION (CONTROL) JOINT
NOT TO SCALE

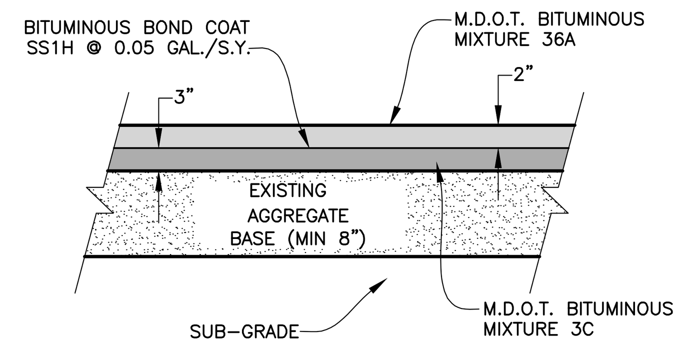

BITUMINOUS PAVEMENT SECTION
NOT TO SCALE
(HEAVY DUTY)

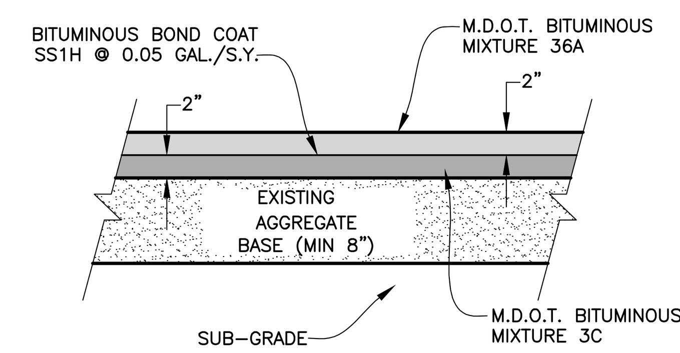

BITUMINOUS PAVEMENT SECTION - BID ALT 1
NOT TO SCALE
(STANDARD DUTY)

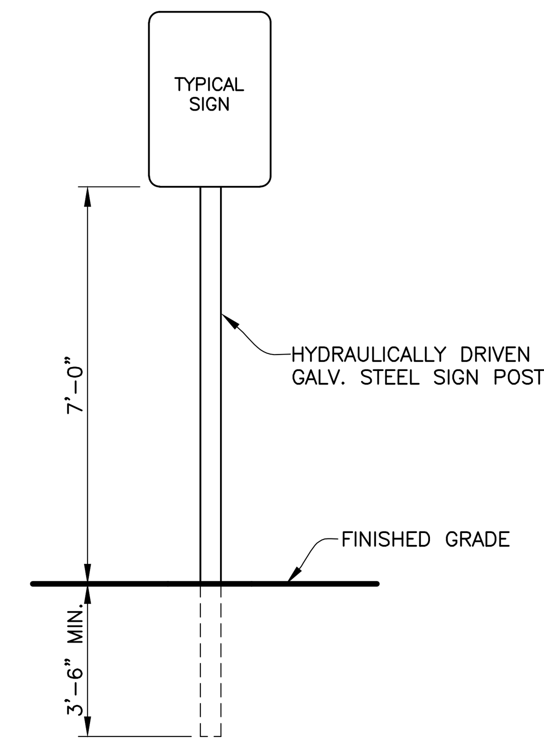

TYPICAL SIGN DETAIL (NON PAVED AREAS)
NOT TO SCALE

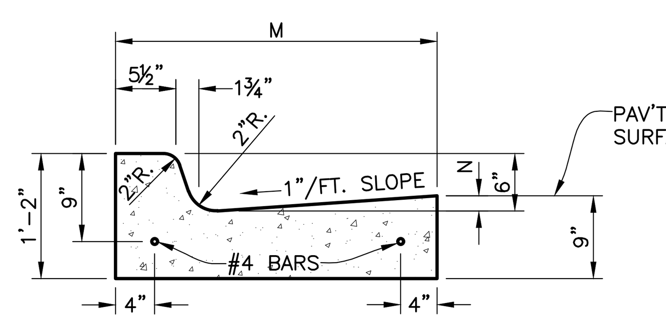

DIMENSIONS		LANE	CONCRETE
M	N	TIES	CU.YD./LIN.FT.
1'-6"	7/8"	OMITTED	0.0484

CONCRETE CURB DETAIL "F2"
NOT TO SCALE

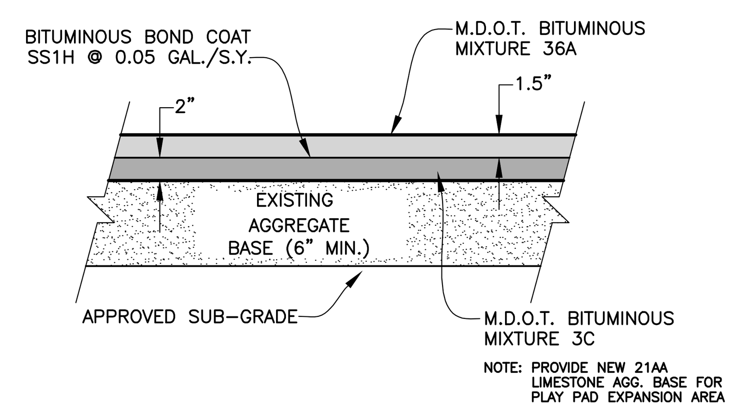

BITUMINOUS PAVEMENT SECTION
NOT TO SCALE (LIGHT DUTY: PATH/PLAY PAD)

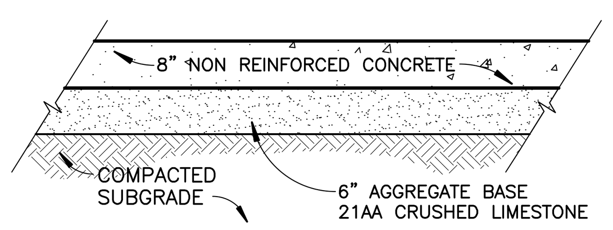

TYPICAL 8" CONCRETE PAVEMENT SECTION
NOT TO SCALE

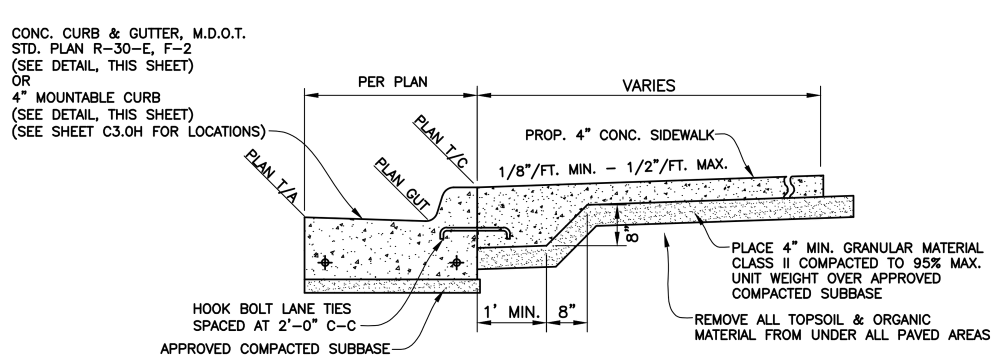

CONCRETE SIDEWALK ANCHORAGE BEHIND CONC. CURB
NOT TO SCALE

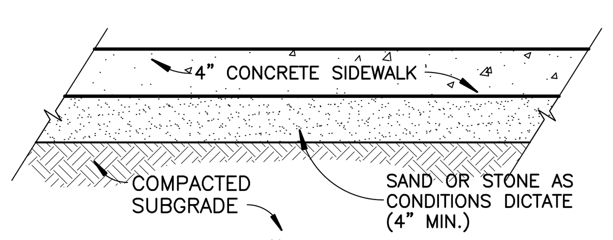

TYPICAL 4" CONCRETE SIDEWALK SECTION
NOT TO SCALE

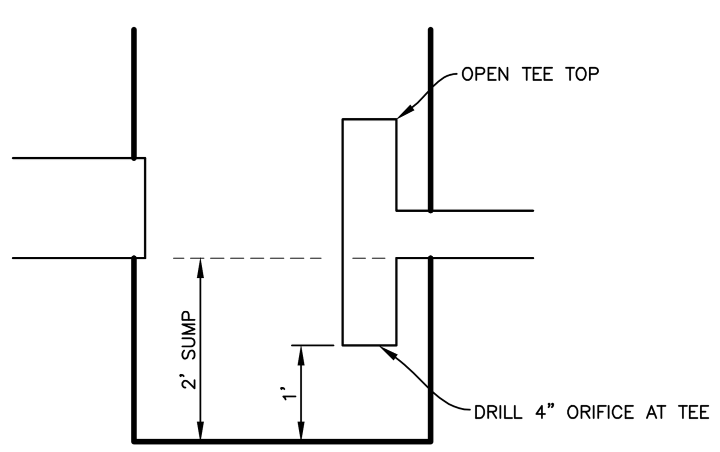

TRAPPED OUTLET CONTROL
NOT TO SCALE

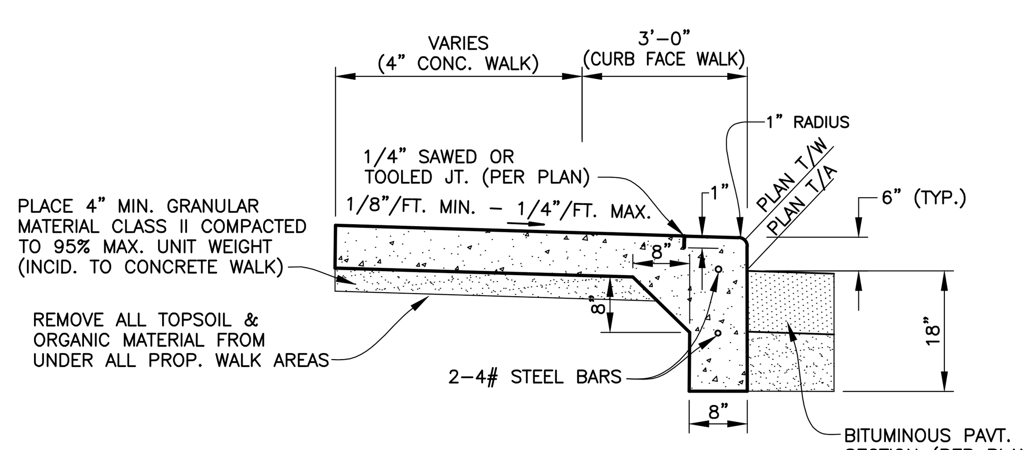

TYPICAL CONCRETE WALK WITH STANDARD CONCRETE CURB FACE
NOT TO SCALE

GENERAL CONSTRUCTION NOTES:

1. THE CONTRACTOR AT ALL TIMES SHALL FOLLOW ALL FEDERAL, STATE AND LOCAL SAFETY REQUIREMENTS DURING CONSTRUCTION OF THIS PROJECT. SPECIAL CARE SHALL BE TAKEN DURING ALL TRENCHING OPERATIONS. SHEETING AND BRACING, CRIBBING, ETC., MUST BE INSTALLED AS REQUIRED TO PROVIDE MAXIMUM SAFETY TO THE CONTRACTOR'S WORKERS IN FULL COMPLIANCE WITH OSHA REGULATIONS.
2. ALL CONSTRUCTION SHALL BE CONDUCTED SUCH THAT THERE WILL BE MINIMAL INTERFERENCE WITH STREETS, DRIVES OR WALKS. THE CONTRACTOR IS RESPONSIBLE FOR MAINTENANCE OF TRAFFIC. DO NOT CLOSE OR OBSTRUCT STREETS, DRIVES OR WALKS OR USER FACILITIES WITHOUT PERMISSION FROM THE OWNER'S REPRESENTATIVE.
3. CONTRACTOR SHALL KEEP EXISTING STREETS, ROADS AND DRIVES CLEAR OF DIRT, DEBRIS AND EQUIPMENT.
4. CONTRACTOR SHALL BE RESPONSIBLE FOR SHORING AND FOR DEWATERING TO ACCOMPLISH ALL WORK INDICATED ON PLANS AND TO PERFORM REQUIRED COMPACTION OPERATIONS.
5. REVIEW CONSTRUCTION AND PROVIDE TRAFFIC SEQUENCE AND SCHEDULE AT THE PRECONSTRUCTION MEETING WITH OWNER.
6. THE CONTRACTOR SHALL VERIFY ALL SITE CONDITIONS IN THE FIELD AND CONTACT THE ENGINEER IF THERE ARE ANY QUESTIONS OR CONFLICTS REGARDING THE CONSTRUCTION DOCUMENTS AND/OR FIELD CONDITIONS SO THAT APPROPRIATE REVISIONS CAN BE MADE PRIOR TO CONSTRUCTION. ANY CONFLICT BETWEEN DRAWINGS AND THE SPECIFICATIONS SHALL BE CONFIRMED WITH THE ENGINEER PRIOR TO BIDDING.
7. THE CONTRACTOR SHALL ABIDE BY ALL OSHA, FEDERAL, STATE AND LOCAL REGULATIONS WHEN OPERATING CRANES, BOOMS, HOISTS, ETC. IN CLOSE PROXIMITY TO OVERHEAD ELECTRIC LINES. IF CONTRACTOR MUST OPERATE EQUIPMENT CLOSE TO ELECTRIC LINES, CONTACT THE POWER COMPANY TO MAKE ARRANGEMENTS FOR PROPER SAFEGUARDS.
8. THE OWNER AT ITS DISCRETION RESERVES THE RIGHT TO MODIFY THE DETAILS AND STANDARDS OF CONSTRUCTION FOR ALL PRIVATE FACILITIES FROM THAT INDICATED ON THE APPROVED PLAN, PROVIDED THAT THE ALTERNATE STANDARD COMPLIES WITH LOCAL CODE AND/OR UTILITY COMPANY REQUIREMENTS AND THE GENERAL DESIGN INTENT OF THE PROJECT IS NOT COMPROMISED.
9. CONTRACTOR SHALL MAINTAIN ALL TRAFFIC LANES AND PEDESTRIAN WALKWAYS AT ALL TIMES UNLESS WRITTEN APPROVAL FROM THE STATE DOT, LOCAL MUNICIPALITY, COUNTY, OR OTHER GOVERNING AUTHORITY IS RECEIVED.
10. THE CONTRACTOR SHALL NOTIFY THE ENGINEER SHOULD ANY DISCREPANCY REGARDING THE PROPOSED WORK OR UNFORESEEN CONDITIONS ARISE PRIOR TO PROCEEDING FURTHER WITH THE AFFECTED WORK.
11. THE CONTRACTOR SHALL PROVIDE AS-BUILT RECORDS OF ALL CONSTRUCTION (INCLUDING UNDERGROUND UTILITIES) TO THE ENGINEER AND OWNER FOLLOWING COMPLETION OF CONSTRUCTION ACTIVITIES.
12. ALL PAVING AND AGGREGATE MATERIALS AND WORK COMPLETED SHALL BE IN STRICT ACCORDANCE WITH THE STATE DOT SPECIFICATIONS AND STANDARD DETAILS UNLESS OTHERWISE SPECIFIED.
13. THE CONTRACTOR SHALL BE RESPONSIBLE FOR VERIFYING ALL DIMENSIONS FOR BUILDING, WALLS, CONCRETE SLABS, AND UTILITY SERVICE POINT CONNECTIONS AND NOTIFYING THE OWNER AND ENGINEER OF ANY CONFLICTS OR DISCREPANCIES PRIOR TO CONSTRUCTION.
14. THE CONTRACTOR SHALL SUBMIT SHOP DRAWINGS OF ALL PRODUCTS AND MATERIALS TO THE OWNER AND LOCAL UTILITY COMPANIES AS REQUIRED FOR REVIEW AND APPROVAL PRIOR TO FABRICATION OR DELIVERY TO THE SITE. ALLOW A MINIMUM OF 7 DAYS FOR REVIEW.
15. THE CONTRACTOR SHALL REFERENCE ARCHITECTURAL PLANS FOR EXACT DIMENSIONS AND CONSTRUCTION DETAILS OF BUILDING, CANOPY, AND UTILITY CONNECTIONS.
16. TRAFFIC CONTROL SIGNAGE SHALL CONFORM TO THE STATE DOT STANDARD DETAIL SHEETS AND THE MANUAL OF UNIFORM TRAFFIC CONTROL DEVICES. SIGNS SHALL BE INSTALLED PLUMB.
17. FIRE LANES SHALL BE ESTABLISHED AND PROPERLY DESIGNATED IN ACCORDANCE WITH THE LOCAL MUNICIPALITY AND LOCAL FIRE DEPARTMENT REQUIREMENTS.
18. THE CONTRACTOR SHALL REMOVE CONFLICTING PAVEMENT MARKINGS IN A METHOD APPROVED BY THE STATE DOT.
19. AGGREGATES AND BITUMINOUS PAVEMENT MATERIAL AND INSTALLATION SPECIFICATIONS SHALL BE IN ACCORDANCE WITH STATE DOT SPECS. THE CONTRACTOR SHALL SUBMIT AGGREGATE SIEVE ANALYSIS AND A JOB-MIX FORMULA FOR THE BITUMINOUS PAVEMENT TO THE CONSTRUCTION MANAGER FOR REVIEW AND APPROVAL AT LEAST 14 DAYS PRIOR TO THE PLACEMENT OF BITUMINOUS PAVEMENTS.
20. ALTERNATIVE METHODS AND PRODUCTS OTHER THAN THOSE SPECIFIED MAY BE USED IF REVIEWED AND APPROVED BY THE OWNER, ENGINEER, AND APPROPRIATE REGULATORY AGENCIES PRIOR TO INSTALLATION.
21. CONTRACTOR SHALL BE RESPONSIBLE FOR ALL CONSTRUCTION LAYOUTS AND SURVEYS REQUIRED TO PERFORM CONSTRUCTION. CADD FILE INFORMATION IS PROVIDED FOR REFERENCE ONLY.
22. PROVIDE ADEQUATE BARRICADES AT DRIVES, ENTRANCES, EXCAVATIONS AND OTHER OPENINGS TO KEEP OUT UNAUTHORIZED PERSONS AND FOR PUBLIC SAFETY AND TRAFFIC CONTROL. SAFETY PROVISIONS OF APPLICABLE LAWS SHALL BE OBSERVED AT ALL TIMES. BARRICADES LEFT IN PLACE AT NIGHT SHALL BE LIGHTED.
23. NO EQUIPMENT OR MATERIAL STORAGE IS PERMITTED WITHIN THE ROAD RIGHT-OF-WAY.
24. CONTRACTOR'S MANNER AND METHOD OF INGRESS AND EGRESS WITH RESPECT TO THE PROJECT AREA SHALL IN NO WAY PROHIBIT OR DISTURB NORMAL PEDESTRIAN OR VEHICULAR TRAFFIC IN THE VICINITY AND IS SUBJECT TO REGULATION AND WRITTEN APPROVAL OF APPROPRIATE GOVERNING AGENCIES.
25. CONSTRUCTION SHALL BE IN ACCORDANCE WITH A.D.A. REGULATIONS AS APPLICABLE.

WAKELY ASSOCIATES, INC.
ARCHITECTS
30500 VAN DYKE AVENUE
SUITE M-7
WARREN, MICHIGAN 48093
PH: 586.573.4100
FX: 586.573.0822
www.WakelyAIA.com

ANDERSON, ECKSTEIN AND WESTRICK INC.
AEW NO. 0577-0102

FARMINGTON PUBLIC SCHOOLS
2017 RENOVATIONS
KENBROOK ELEMENTARY RENOVATIONS

MISCELLANEOUS PROJECT DETAILS

PRELIMINARY ☐
DESIGN DEVELOPMENT ■
CONSTRUCTION ☐
FINAL RECORD ☐

DRAWN BY KJP
CHECKED BY JS

REVISIONS
11/22/17 PRELIMINARY BID
12/06/17 SCOPING DOCS
12/13/17 BID SET

DATE: OCTOBER 25, 2017
SHEET NO.
C5.0
JOB NO.

M:\0577\0577-0102\DWG\CIVIL\CD_ENGPLANS.DWG C5.0_DH--12/12/2017 9:05:22 AM

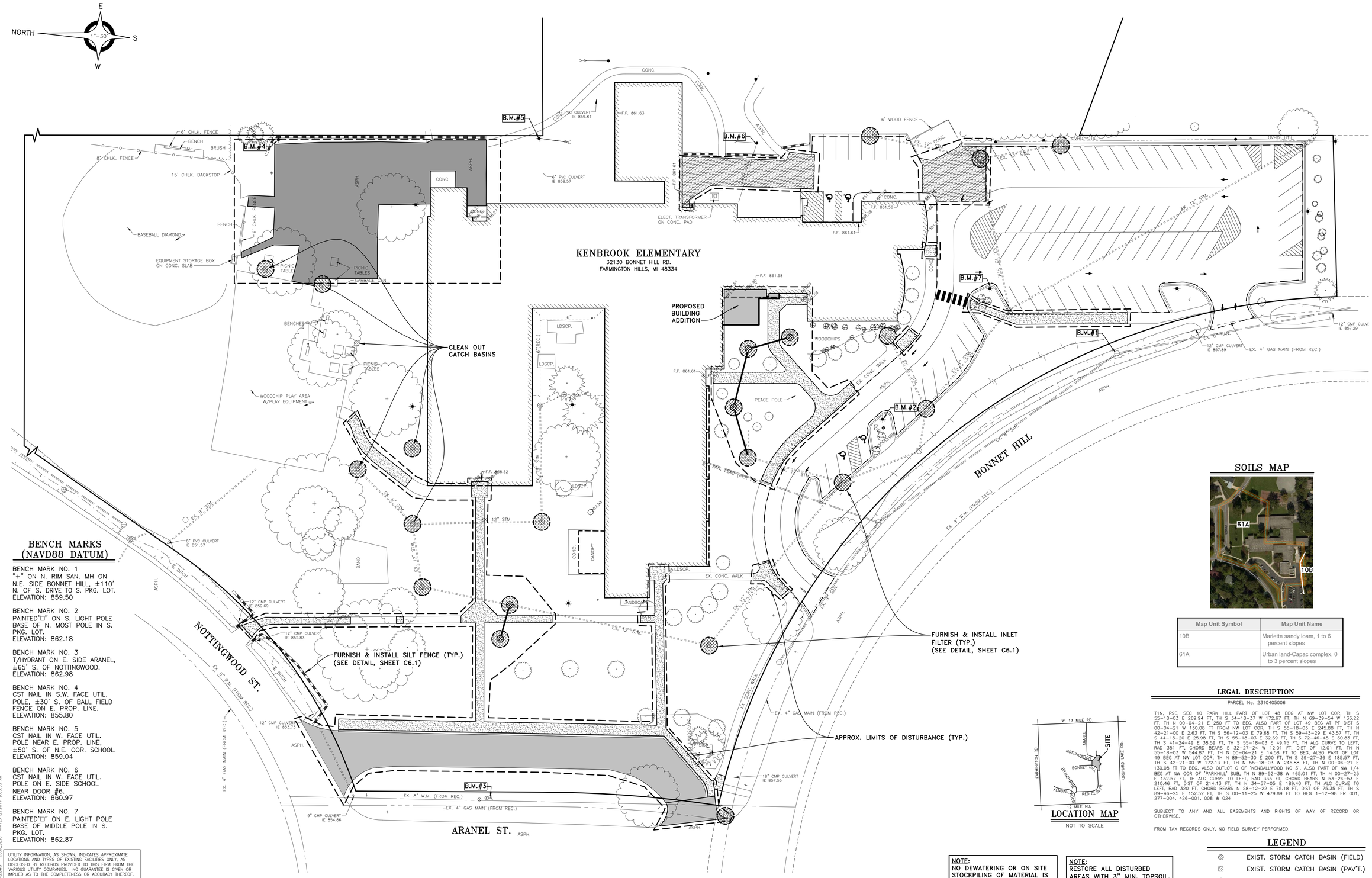

BENCH MARKS (NAVD88 DATUM)

BENCH MARK NO. 1
"+" ON N. RIM SAN. MH ON N.E. SIDE BONNET HILL, ±110' N. OF S. DRIVE TO S. PKG. LOT.
ELEVATION: 859.50

BENCH MARK NO. 2
PAINTED"□" ON S. LIGHT POLE BASE OF N. MOST POLE IN S. PKG. LOT.
ELEVATION: 862.18

BENCH MARK NO. 3
T/HYDRANT ON E. SIDE ARANEL, ±65' S. OF NOTTINGWOOD.
ELEVATION: 862.98

BENCH MARK NO. 4
CST NAIL IN S.W. FACE UTIL. POLE, ±30' S. OF BALL FIELD FENCE ON E. PROP. LINE.
ELEVATION: 855.80

BENCH MARK NO. 5
CST NAIL IN W. FACE UTIL. POLE NEAR E. PROP. LINE, ±50' S. OF N.E. COR. SCHOOL.
ELEVATION: 859.04

BENCH MARK NO. 6
CST NAIL IN W. FACE UTIL. POLE ON E. SIDE SCHOOL NEAR DOOR #6.
ELEVATION: 860.97

BENCH MARK NO. 7
PAINTED"□" ON E. LIGHT POLE BASE OF MIDDLE POLE IN S. PKG. LOT.
ELEVATION: 862.87

UTILITY INFORMATION, AS SHOWN, INDICATES APPROXIMATE LOCATIONS AND TYPES OF EXISTING FACILITIES ONLY, AS DISCLOSED BY RECORDS PROVIDED TO THIS FIRM FROM THE VARIOUS UTILITY COMPANIES. NO GUARANTEE IS GIVEN OR IMPLIED AS TO THE COMPLETENESS OR ACCURACY THEREOF.

PRIOR TO CONSTRUCTION, ALL LOCATIONS AND DEPTHS OF EXISTING OVERHEAD AND UNDERGROUND UTILITIES (IN CONFLICT WITH THE CONSTRUCTION OF THESE PROPOSED IMPROVEMENTS) SHALL BE VERIFIED IN THE FIELD. DURING THE CONSTRUCTION, THE CONTRACTOR SHALL PROTECT AND SUPPORT ALL UTILITIES THAT ARE ENCOUNTERED. (ALL COSTS FOR UTILITY LOCATION VERIFICATION, SUPPORT AND PROTECTION SHALL BE INCLUDED IN THE PROPOSED PAY ITEM CONFLICTING WITH THAT UTILITY).

DURING CONSTRUCTION, THE CONTRACTOR SHALL USE EXTREME CAUTION WHEN OPERATING NEAR ANY AND ALL OVERHEAD AND / OR BURIED UTILITIES.

3 WORKING DAYS BEFORE YOU DIG

CALL MISS DIG 811 TOLL FREE

M:\0577\0577-0102\DWG\CIVIL\C6_ENGPLANS.DWG C6.0_SESC 1--12/12/2017 9:05:55 AM

SOILS MAP

Map Unit Symbol	Map Unit Name
10B	Marlette sandy loam, 1 to 6 percent slopes
61A	Urban land-Capac complex, 0 to 3 percent slopes

LEGAL DESCRIPTION

PARCEL No. 2310405006

T1N, R9E, SEC 10 PARK HILL PART OF LOT 48 BEG AT NW LOT COR, TH S 55-18-03 E 269.94 FT, TH S 34-18-37 W 172.67 FT, TH N 69-39-54 W 133.22 FT, TH N 00-04-21 E 250 FT TO BEG, ALSO PART OF LOT 49 BEG AT PT DIST S 00-04-21 W 130.08 FT FROM NW LOT COR, TH S 55-18-03 E 245.88 FT, TH N 42-21-00 E 2.63 FT, TH S 56-12-03 E 79.68 FT, TH S 59-43-29 E 43.57 FT, TH S 44-15-20 E 25.98 FT, TH S 55-18-03 E 32.69 FT, TH S 72-46-45 E 30.83 FT, TH S 41-24-49 E 38.59 FT, TH S 55-18-03 E 49.15 FT, TH ALG CURVE TO LEFT, RAD 351 FT, CHORD BEARS S 32-27-24 W 12.01 FT, DIST OF 12.01 FT, TH N 55-18-03 W 544.87 FT, TH N 00-04-21 E 14.58 FT TO BEG, ALSO PART OF LOT 49 BEG AT NW LOT COR, TH N 89-52-30 E 200 FT, TH S 39-27-36 E 185.57 FT, TH S 42-21-00 W 172.13 FT, TH N 55-18-03 W 245.88 FT, TH N 00-04-21 E 130.08 FT TO BEG, ALSO OUTLOT C OF "KENDALLWOOD NO 3', ALSO PART OF NW 1/4 BEG AT NW COR OF "PARKHILL' SUB, TH N 89-52-38 W 465.01 FT, TH N 00-27-25 E 132.57 FT, TH ALG CURVE TO LEFT, RAD 333 FT, CHORD BEARS N 53-24-53 E 210.46 FT, DIST OF 214.13 FT, TH N 34-57-05 E 189.40 FT, TH ALG CURVE TO LEFT, RAD 320 FT, CHORD BEARS N 28-12-22 E 75.18 FT, DIST OF 75.35 FT, TH S 89-46-25 E 152.52 FT, TH S 00-11-25 W 479.89 FT TO BEG 1-12-98 FR 001, 277-004, 426-001, 008 & 024

SUBJECT TO ANY AND ALL EASEMENTS AND RIGHTS OF WAY OF RECORD OR OTHERWISE.

FROM TAX RECORDS ONLY, NO FIELD SURVEY PERFORMED.

LOCATION MAP

NOT TO SCALE

NOTE:
NO DEWATERING OR ON SITE STOCKPILING OF MATERIAL IS ANTICIPATED ON THIS PROJECT

NOTE:
RESTORE ALL DISTURBED AREAS WITH 3" MIN. TOPSOIL, SEED, FERTILIZER & MULCH.

- SOIL EROSION CONTACT PERSON: TO BE PROVIDED UPON AWARD OF CONTRACT.
- DISTANCE TO NEAREST WATER COURSE: MINNOW POND DRAIN IS 750 L.F.± WEST OF SITE.
- GROSS ACREAGE DISTURBED IS 0.85 ACRES.

SEQUENCE OF EVENTS

NOTICE TO PROCEED	JUNE 2018
START DEMO, GRADING, COMPLETE FOR FOOTINGS	JUNE 2018
SIDEWALK CONSTRUCTION	JUNE 2018
SITE WORK COMPLETE	JULY 2018
SUBSTANTIAL COMPLETION	JULY 2018

LEGEND

- EXIST. STORM CATCH BASIN (FIELD)
- EXIST. STORM CATCH BASIN (PAV'T.)
- EXIST. STORM MAN HOLE
- STORM MAN HOLE
- STORM CATCH BASIN (FIELD)
- STORM CATCH BASIN (PAV'T.)
- INLET FILTER
- SILT FENCE
- LIMITS OF DISTURBANCE

WAKELY ASSOCIATES, INC.
ARCHITECTS

30500 VAN DYKE AVENUE
SUITE M-7
WARREN, MICHIGAN 48093
PH: 586.573.4100
FX: 586.573.0822
www.WakelyAIA.com

ANDERSON, ECKSTEIN AND WESTRICK INC.
51301 Schoenherr Road,
Shelby Township, Michigan 48315
Phone 586-726-1234
Fax 586-726-8790
AEW NO. 0577-0102

FARMINGTON PUBLIC SCHOOLS
2017 RENOVATIONS
KENBROOK ELEMENTARY RENOVATIONS

S.E.S.C. PLAN

PRELIMINARY ☐
DESIGN DEVELOPMENT ■
CONSTRUCTION ☐
FINAL RECORD ☐

DRAWN BY KJP
CHECKED BY JS

REVISIONS

11/9/2017	PRELIMINARY BID
11/20/2017	SCOPING DOCS
12/13/2017	BID SET

DATE: OCTOBER 25, 2017

SHEET NO.

C6.0

JOB NO.

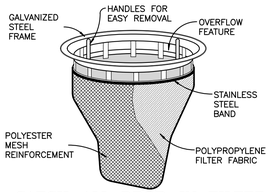

CATCH–ALL DROP–IN FILTER

NOT TO SCALE

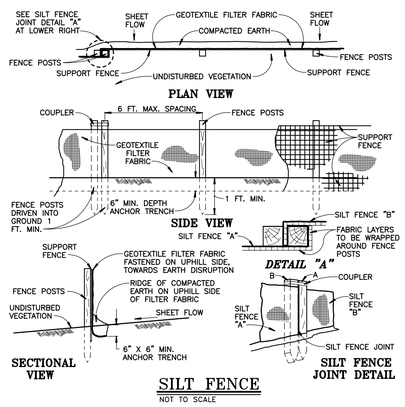

SILT FENCE

NOT TO SCALE

SOIL EROSION AND SEDIMENTATION CONTROL NOTES AND MAINTENANCE NOTES

1. THIS PROJECT SHALL BE CONSTRUCTED IN COMPLIANCE WITH PART 91 OF ACT 451 OF 1994, AS AMENDED. THE SOIL EROSION AND SEDIMENTATION CONTROL ACT AND THE OAKLAND COUNTY SOIL EROSION AND SEDIMENTATION CONTROL ORDINANCE.

2. ALL EROSION AND SEDIMENTATION CONTROL WORK SHALL CONFORM TO THE STANDARDS AND SPECIFICATIONS OF OAKLAND COUNTY WATER RESOURCES COMMISSION.

3. EROSION AND ANY SEDIMENTATION FROM WORK ON THIS SITE SHALL BE CONTAINED ON THE SITE AND NOT ALLOWED TO COLLECT ON ANY OFF SITE AREAS OR IN WATERWAYS. WATERWAYS INCLUDE BOTH NATURAL AND MAN MADE OPEN DITCHES, STREAMS, STORM DRAINS, LAKES, AND PONDS.

4. STAGING THE WORK WILL BE DONE BY THE CONTRACTOR AS DIRECTED IN THESE PLANS AND AS REQUIRED TO ENSURE PROGRESSIVE STABILIZATION OF DISTURBED EARTH CHANGE.

5. THE CONTRACTOR SHALL BE RESPONSIBLE FOR INSTALLATION AND MAINTENANCE OF SOIL EROSION AND SEDIMENTATION CONTROL DEVICES.

6. THE CONTRACTOR SHALL IMPLEMENT AND MAINTAIN THE SOIL EROSION CONTROL MEASURES AS SHOWN ON THE PLANS BEFORE AND AT ALL TIMES DURING CONSTRUCTION ON THIS PROJECT. ANY MODIFICATIONS OR ADDITIONS TO SOIL EROSION CONTROL MEASURES DUE TO CONSTRUCTION OR CHANGED CONDITIONS SHALL BE COMPLIED WITH AS REQUIRED OR DIRECTED BY OAKLAND COUNTY WATER RESOURCES COMMISSION.

7. IF ANY OF THE SESC MEASURES ON THE SITE ARE DEEMED INADEQUATE OR INEFFECTIVE, THE OAKLAND COUNTY WATER RESOURCES COMMISSION HAS THE RIGHT TO REQUIRE ADDITIONAL SESC MEASURES AT THE EXPENSE OF THE LANDOWNER.

8. INSTALL CRUSHED CONCRETE ACCESS DRIVE PLACED ON GEOTEXTILE FABRIC AS INDICATED ON THE PLAN. THE ACCESS DRIVE MUST BE A MINIMUM OF 12' X 50' X 8".

   A. NEW LAYERS OF CRUSHED CONCRETE WILL BE ADDED AS OLD LAYERS BECOME COMPACTED.

9. INSTALL SILT FENCE AS INDICATED ON THE PLAN AND AT ADDITIONAL AREAS AS NECESSARY.

   A. SILT FENCE SHALL BE INSTALLED PER DETAIL.

   B. BUILD UP OF SEDIMENT SHALL BE REMOVED WHEN SEDIMENT ACCUMULATES TO 1/3 TO 1/2 OF THE HEIGHT OF THE SILT FENCE.

   C. IF SILT FENCE FABRIC DECOMPOSES OR BECOMES INEFFECTIVE PRIOR TO THE END OF EXPECTED USABLE LIFE AND THE BARRIER IS STILL REQUIRED, THE SILT FENCE SHALL BE REPLACED PROMPTLY.

   D. SILT FENCE SHALL BE INSPECTED WEEKLY UNDER NORMAL CONDITIONS, WITHIN 24 HOURS OF RAINFALL AND DAILY DURING A PROLONGED RAIN EVENT. REQUIRED MAINTENANCE SHALL BE PROVIDED PROMPTLY.

10. INSTALL INLET FILTER ON ALL PAVEMENT CATCH BASINS PER DETAIL.

    A. INLET FILTERS SHALL BE INSPECTED WEEKLY UNDER NORMAL CONDITIONS, WITHIN 24 HOURS OF A RAINFALL, AND DAILY DURING A PROLONGED RAIN EVENT.

    B. BUILDUP OF SEDIMENT AND DEBRIS SHALL BE REMOVED PROMPTLY.

    C. IF FABRIC DECOMPOSES OR BECOMES INEFFECTIVE PRIOR TO THE END OF EXPECTED USABLE LIFE AND THE BARRIER IS STILL REQUIRED, THE FABRIC SHALL BE REPLACED PROMPTLY.

11. INSTALL SILT FENCE ON ALL YARD CATCH BASINS PER DETAIL. SEED OR SOD THE AREA BETWEEN THE SILT FENCE AND THE INLET.

    A. SILT FENCE SHALL BE INSPECTED WEEKLY UNDER NORMAL CONDITIONS, WITHIN 24 HOURS OF RAINFALL, AND DURING A PROLONGED RAIN EVENT.

    B. BUILD UP OF SEDIMENT SHALL BE REMOVED WHEN SEDIMENT ACCUMULATES TO 1/3 TO 1/2 OF THE HEIGHT OF THE SILT FENCE.

    C. IF FABRIC DECOMPOSES OR BECOMES INEFFECTIVE PRIOR TO THE END OF EXPECTED USABLE LIFE AND THE BARRIER IS STILL REQUIRED, THE SILT FENCE SHALL BE REPLACED PROMPTLY.

12. INLET SEDIMENT TRAPS AND ALL DITCH SEDIMENT TRAPS SHALL BE INSPECTED DAILY. THE SEDIMENT PITS SHALL BE CLEANED OUT WHEN HALF FULL, OR AS DIRECTED BY OAKLAND COUNTY WATER RESOURCES COMMISSION.

13. ALL STOCKPILED SOILS SHALL BE MAINTAINED IN SUCH A WAY AS TO PREVENT EROSION FROM LEAVING THE SITE. IF THE STOCKPILE WILL BE ON SITE FOR MORE THAN 30 DAYS, THE STOCKPILE MUST BE SEEDED. SILT FENCE MUST BE INSTALLED AROUND THE PERIMETER OF THE STOCKPILE.

14. IMMEDIATELY AFTER SEEDING, MULCH ALL SEEDED AREAS WITH UNWEATHERED SMALL GRAIN STRAW, SPREAD UNIFORMLY AT THE RATE OF 1–1/2 TO 2 TONS PER ACRE OR 100 POUNDS (2–3 BALES) PER 1000 SQUARE FEET. THIS MULCH SHOULD BE ANCHORED WITH DISC TYPE MULCH ANCHORING TOOL OR OTHER MEANS AS APPROVED BY OAKLAND COUNTY WATER RESOURCES COMMISSION. MULCH MATTING MAY BE USED IN LIEU OF LOOSE MULCH.

15. IF ANY DEWATERING IS NEEDED, IT SHALL BE DISCHARGED THROUGH A FILTER BAG OVER A WELL VEGETATED AREA. THE PUMP MUST DISCHARGE AT A NON–EROSIVE VELOCITY. IF NECESSARY, AN APPROVED ENERGY DISSIPATER MAY BE USED.

16. ALL DIRT TRACKED ONTO ANY ROADWAY SHALL BE REMOVED IMMEDIATELY.

17. STREETS AND OR PARKING AREAS WILL BE SCRAPED ON A DAILY BASIS AND SWEPT AT A MINIMUM OF ONCE PER WEEK BY THE CONTRACTOR.

18. DURING DRY PERIODS, ALL DISTURBED AREAS SHALL BE WATERED FOR DUST CONTROL.

19. PERMANENT SOIL EROSION CONTROL MEASURES FOR ALL SLOPES, CHANNELS, DITCHES, OR ANY DISTURBED LAND AREA SHALL BE COMPLETED WITHIN 5 CALENDAR DAYS AFTER FINAL GRADING OR THE FINAL EARTH CHANGE HAS BEEN COMPLETED. WHEN IT IS NOT POSSIBLE TO PERMANENTLY STABILIZE A DISTURBED AREA AFTER EARTH CHANGE HAS BEEN COMPLETED OR WHERE SIGNIFICANT EARTH CHANGE HAS BEEN COMPLETED OR WHERE SIGNIFICANT EARTH CHANGES ACTIVITY CEASES, TEMPORARY SOIL EROSION CONTROL MEASURES SHALL BE IMPLEMENTED IMMEDIATELY. ALL TEMPORARY SOIL EROSION CONTROL SHALL BE MAINTAINED UNTIL PERMANENT SOIL EROSION CONTROL MEASURES ARE IMPLEMENTED. ALL PERMANENT SOIL EROSION CONTROL MEASURES WILL BE IMPLEMENTED AND ESTABLISHED BEFORE A CERTIFICATE OF COMPLIANCE IS ISSUED.

20. FINAL GRADE, ESTABLISH VEGETATION, AND OR LANDSCAPE ALL DISTURBED AREAS NOT BUILT OR PAVED UPON.

21. REMOVE ALL TEMPORARY SOIL EROSION DEVICES AFTER PERMANENT STABILIZATION IS ESTABLISHED.

NAME OF & DISTANCE TO NEAREST WATERCOURSE:

MINNOW POND DRAIN IS 750 L.F.± WEST OF SITE.

NAME(S) & PHONE NUMBER(S) FOR PERSON(S) RESPONSIBLE FOR THE MAINTENANCE OF ALL TEMPORARY & PERMANENT SOIL EROSION CONTROL MEASURES:

TO BE PROVIDED UPON AWARD OF CONTRACT.

APPROXIMATE START DATE JUNE 2018.

APPROXIMATE COMPLETION DATE JULY 2018.

TOTAL ACRES DISTURBED = 0.85 ACRES

I UNDERSTAND MY RESPONSIBILITY OUTLINED UNDER THESE GUIDELINES.

CONTRACTOR'S SIGNATURE DATE

FAILURE TO COMPLY WITH THE SESC PLAN AND THESE GUIDELINES MAY RESULT IN ENFORCEMENT ACTION AGAINST THE CONTRACTOR.

WAKELY ASSOCIATES, INC.
ARCHITECTS

30500 VAN DYKE AVENUE
SUITE M-7
WARREN, MICHIGAN 48093
PH: 586.573.4100
FX: 586.573.0822
www.WakelyAIA.com

ANDERSON, ECKSTEIN AND WESTRICK INC.
51801 Schoenherr Road,
Shelby Township, Michigan 48315
Phone 586-726-1234
Fax 586-726-8790
AEW NO. 0577-0102

FARMINGTON PUBLIC SCHOOLS
2017 RENOVATIONS
KENBROOK ELEMENTARY RENOVATIONS

S.E.S.C. DETAILS

PRELIMINARY ☐
DESIGN DEVELOPMENT ■
CONSTRUCTION ☐
FINAL RECORD ☐

DRAWN BY KJP
CHECKED BY JS

REVISIONS
1/22/17 PRELIMINARY BID
10/26/17 SCOPING DOCS.
12/13/17 BID SET

DATE: OCTOBER 25, 2017

SHEET NO.
C6.1

JOB NO.

M:\0577\0577-0102\DWG\CIVIL\00_ENGPLANS.DWG C6.1_SESC 2--12/12/2017 9:06:12 AM

GENERAL

1. THIS BUILDING HAS BEEN DESIGNED AND SHALL BE CONSTRUCTED IN ACCORDANCE WITH THE MICHIGAN BUILDING CODE, 2015 EDITION

A. DESIGN LOADS:

A. ROOF LIVE LOAD = 20 PSF (MBC 1607.12)

B. SNOW LOADS (MBC 1608)

a. GROUND SNOW LOAD, P_g = 25 PSF (MBC FIG. 1608.2)
b. SNOW EXPOSURE FACTOR, Ce = 1.0 (ASCE 7-10 7.3.1)
c. THERMAL FACTOR, Ct = 1.0 (ASCE7-10 7.3.2)
d. BUILDING CATEGORY III (MBC TABLE 1604.5)
e. IMPORTANCE FACTOR, Is = 1.1 (ASCE7 TABLE 1.5-2)
f. FLAT ROOF SNOW LOAD, Pf = 22 PSF + (DRIFTING (ASCE7-10 7.3)
g. DRIFTING CALCULATED PER ASCE 7-10

D. WIND LOADS (MBC 1609)

a. BASIC WIND SPEED V = 115 MPH (3-SECOND GUST) (ASCE7-10 FIG 26.5-1A)
b. BUILDING CATEGORY III (MBC TABLE 1604.5)
c. EXPOSURE CATEGORY C (MBC 1609.4.3)
d. INTERNAL PRESSURE COEFFICIENT ±0.18
e. COMPONENTS AND CLADDING LOAD = 24.4 PSF (ASCE7-10 CH.30)

E. EARTHQUAKE LOADS (MBC 1613)

a. SEISMIC RISK CATEGORY III (MBC 1613.3.5)
b. SEISMIC IMPORTANCE FACTOR, Ie = 1.25 (ASCE7-10 FIG 1.5-2)
c. Ss = 0.11 (ASCE7-10 FIG. 22-1); S1 = 0.04 (ASCE7-10 FIG. 22-1)
d. SITE CLASS = D (MBC TABLE 1613.3.2)
e. Fa = 1.6 (MBC TABLE 1613.3.3(1)); Fv = 2.4 (MBC TABLE 1613.3.3(2))
f. Sms = Fa*Ss = 0.18 (MBC); Sm1 = Fv*S1 = 0.10 (MBC)
g. Sds = (2/3)*Sms = 0.117 (MBC 1613.3.3); Sd1 = (2/3)*Sm1 = 0.064 (MBC 1613.3.3)
h. SEISMIC DESIGN CATEGORY = A (MBC TABLE 1613.3.5(1))
i. SEISMIC RESISTING SYSTEM: ORDINARY PLAIN MASONRY SHEAR WALLS (ASCE7-10 TABLE 12.14-1)
j. DESIGN BASE SHEAR = 0.058W (ASCE7-10)
k. SEISMIC RESPONSE COEFFICIENT, Cs = 0.010 (ASCE7-10)
l. RESPONSE MODIFICATION FACTOR, R = 1.5 (ASCE7-10)
m. EARTHQUAKE LOADS CALCULATED PER SECTION 1613.3.5.2 "SIMPLIFIED ANALYSIS PROCEDURE FOR SEISMIC DESIGN OF BUILDINGS."
n. DEFLECTION AMPLIFICATION FACTOR, Cd = 1.25 (ASCE7-10)

2. THE ARCHITECTURAL DRAWINGS SHALL BE WORKED WITH THE STRUCTURAL DRAWINGS. SOME STRUCTURAL INFORMATION HAS BEEN INCORPORATED IN THE ARCHITECTURAL DRAWINGS.

3. THE STRUCTURE SHALL BE CONSIDERED TO BE IN AN UNSTABLE CONDITION UNTIL ALL WALL AND ROOF STRUCTURES ARE COMPLETED. CONTRACTOR SHALL PROVIDE TEMPORARY BRACING FOR STABILITY AND TO RESIST LATERAL LOADS DURING ERECTION.

4. ALL NON LOAD BEARING WALLS SHALL BE CONSTRUCTED TO ALLOW FOR THE VERTICAL DEFLECTION OF THE STRUCTURE ABOVE.

FOUNDATION

1. FOUNDATIONS ARE DESIGNED FOR A MAXIMUM ALLOWABLE BEARING CAPACITY OF 3,000 PSF. FOUNDATIONS SHALL BEAR ON NATURAL CLAY UNDISTURBED SOIL OR ENGINEERED FILL PROPERLY PLACED UPON THESE CLAY SOILS.

2. THE CONTRACTOR WILL RETAIN THE SERVICES OF A QUALIFIED GEOTECHNICAL ENGINEER TO MONITOR THE FOUNDATION WORK & DETERMINE THE QUALITY OF THE SOIL AT ALL FOOTING LOCATIONS. IF UNSUITABLE MATERIALS ARE ENCOUNTERED AT THE FOOTING LOCATIONS, THE UNSUITABLE MATERIALS SHALL BE REMOVED & REPLACED WITH COMPACTED ENGINEERED FILL OR THE FOOTING LOWERED AT THE DIRECTION OF THE ARCHITECT OR ENGINEER.

3. CONTRACTORS SHALL BE AWARE OF AND VERIFY LOCATION OF ALL UNDERGROUND UTILITIES, TANKS, ETC. DUE CARE SHALL BE EXERCISED DURING EXCAVATION SO THAT EXISTING UTILITIES ARE NOT DAMAGED

4. THE AREA OF PROPOSED CONSTRUCTION SHALL BE STRIPPED OF THE EXISTING TOP SOIL & PAVEMENT MATERIALS. ALL REMNANTS OF PREVIOUS STRUCTURES OCCUPYING THE SITE SHALL BE REMOVED AND BACKFILLED WITH ENGINEERED FILL, PROPERLY PLACED AND COMPACTED. FOLLOWING THE REMOVAL OF THE ABOVE ITEMS, IF COHESIVE MATERIALS ARE EXPOSED AT THE SUBGRADE ALL AREAS OF PROPOSED DEVELOPMENT SHALL BE THOROUGHLY PROOFROLLED UNDER THE OBSERVATION OF A QUALIFIED SOILS ENGINEER. THE PROOF ROLLING SHOULD BE PERFORMED WITH A FULLY LOADED DUMP TRUCK OR OTHER HEAVILY LOADED PNEUMATIC TIRED VEHICLE MAKING CONTINUOUS SIDE-BY-SIDE PASSES ACROSS THE ENTIRE AREA. SUBGRADE AREAS THAT DEFLECT EXCESSIVELY OR PUMP DURING PROOF ROLLING SHOULD BE EXCAVATED AND BACK FILLED WITH ACCEPTABLE ENGINEERED FILL. IF EXISTING GRANULAR FILL MATERIALS ARE EXPOSED UPON STRIPPING OPERATIONS AT THE SUBGRADE, THE AREA SHOULD BE THOROUGHLY DENSIFIED WITH A LARGE DRUM ROLLER SUCH THAT THE TOP 12 INCHES IS COMPACTED TO AT LEAST 95 PERCENT OF THE MAXIMUM DRY DENSITY VALUE DETERMINED BY ASTM STANDARD D-1557 (MODIFIED PROCTOR)

5. UPON COMPLETION OF THE SUB GRADE PREPARATION, THE SITE CAN BE RAISED TO THE PROPER ELEVATION WITH PROPERLY PLACED AND COMPACTED ENGINEERED FILL. ALL COMPACTED BACKFILL SHALL BE A CLEAN, UNIFORM GRADED, GRANULAR MATERIAL AND FREE OF FROZEN CHUNKS, ORGANICS, DEBRIS OR OTHER DELETERIOUS MATERIALS. ALL COMPACTED BACKFILL SHALL BE PLACED IN NO MORE THAN 10" LOOSE LIFTS AND COMPACTED TO A DRY DENSITY OF AT LEAST 95% OF THE MAXIMUM DRY DENSITY DETERMINED BY ASTM D-1557 (MODIFIED PROCTOR). THIS MAY BE DECREASED TO 90% IN THOSE AREAS TO BE LANDSCAPED & NOT SUPPORTING STRUCTURE OR PAVEMENT.

CONCRETE

1. THE FOLLOWING CODES GOVERN THE DESIGN, DETAILING, FABRICATION AND CONSTRUCTION OF ALL REINFORCED CONCRETE:
   A. BUILDING CODE REQUIREMENTS FOR REINFORCED CONCRETE (ACI 318-11)
2. ALL CONCRETE 28 DAY COMPRESSIVE STRENGTH SHALL BE AS FOLLOWS:
   FOOTINGS & PIERS 3000 PSI
   SLAB ON GRADE 4000 PSI
   ALL EXTERIOR EXPOSED CONCRETE SHALL BE ENTRAINED.
3. BEFORE PLACING CONCRETE REFER TO ARCHITECTURAL, MECHANICAL & ELECTRICAL DRAWINGS FOR LOCATIONS OF PIPE SLEEVES, EMBEDDED ITEMS, OPENINGS, EQUIPMENT PADS, ELECTRICAL CONDUITS, RECESSES, DRAINS, ETC. ALL OPENINGS FOR PIPE, CONDUITS, ETC. SHALL BE SLEEVED. MINIMUM SLEEVE SPACING SHALL BE 3 SLEEVE DIAMETERS.
4. ALL DEFORMED BAR REINFORCEMENT SHALL BE ASTM A615, GRADE 60.
5. ALL DEFORMED BAR REINFORCING SHALL BE SPLICED A MINIMUM OF 32 BAR DIAMETERS.
6. ALL WELDED WIRE FABRIC SHALL BE ASTM A-185 SHEETS SHALL BE LAPPED A MINIMUM OF WIRE SPACING + 2".
7. PROVIDE RIGHT CORNER BARS W/ STD LAP @ CORNER OF ALL CONC. WALLS. LAP W/ TYPICAL WALL REINFORCING. SIZE OF BAR TO MATCH TYPICAL HORIZONTAL REINFORCING.
8. CONTRACTOR TO PROVIDE VERIFICATION AND INSPECTION OF CONCRETE CONSTRUCTION PER 2015 MBC CODE TABLE 1705.3

CONCRETE MASONRY

1. THE FOLLOWING CODES GOVERN THE DESIGN, DETAILING & CONSTRUCTION OF ALL MASONRY:
   A. BUILDING CODE REQUIREMENTS FOR MASONRY STRUCTURES (ACI 530-11)
   B. SPECIFICATIONS FOR MASONRY STRUCTURES (ACI 530.1-11)
2. ALL MASONRY SHALL HAVE A COMPRESSIVE STRENGTH, fm = 2000 PSI.
3. ALL MORTAR FOR LOAD BEARING AND EXTERIOR CONCRETE MASONRY SHALL BE TYPE S, ABOVE GRADE AND TYPE M BELOW GRADE PROPORTIONED BY VOLUME ACCORDING TO ASTM C-270.
4. ALL GROUT SHALL HAVE A MINIMUM 28 DAY COMPRESSIVE STRENGTH OF 3000 PSI, AND SHALL BE PROPORTIONED BY VOLUME ACCORDING TO ASTM C-476.
5. ALL CONCRETE MASONRY UNITS SHALL BE ASTM C-90 GRADE N, TYPE I UNITS MEDIUM WEIGHT UNLESS NOTED OTHERWISE. REFER TO ARCHITECTURAL DRAWINGS FOR FURTHER DETAILS WITH REGARD TO FACE FINISH.
6. ALL MASONRY WALLS SHALL HAVE HORIZONTAL JOINT REINFORCEMENT (LADDER TYPE) AT 16" O.C. PROVIDE PREFABRICATED CORNER PIECES AT ALL CORNERS & INTERSECTIONS OF WALLS.
7. ALL DEFORMED BAR REINFORCING SHALL BE ASTM A-615 GRADE 60. LAP SPLICES IN WALLS SHALL BE A MINIMUM OF 48 BAR DIAMETERS, UNLESS NOTED OTHERWISE.
8. REINFORCE ALL MASONRY WALLS AS SHOWN ON SCHEDULE AND DETAILS. PLACE BAR ON CENTERLINE OF WALL IN FULLY GROUTED CELL. FULL HEIGHT OF THE WALL. LAP REINFORCEMENT WITH TYPICAL FOOTING DOWEL, SEE WALL SECTION FOR DOWELS REQUIREMENTS.
9. SEE ARCHITECTURAL DRAWINGS FOR MASONRY JOINT LOCATIONS.
10. CONTRACTOR TO PROVIDE VERIFICATION AND INSPECTION OF MASONRY CONSTRUCTION PER 2015 MBC CODE SECTION 1705.4.

STRUCTURAL STEEL

1. THE FOLLOWING CODE SHALL GOVERN THE DETAILING, FABRICATION & ERECTION OF ALL STEEL:
   A. MANUAL OF STEEL CONSTRUCTION, 14TH EDITION (AMERICAN INSTITUTE OF STEEL CONSTRUCTION)

WIDE FLANGE SHAPES	——	ASTM A-992, Fy = 50 KSI
STEEL PLATE, CHANNELS & ANGLES	——	ASTM A-36
STRUCTURAL STEEL TUBES	——	ASTM A-500 GRADE B, Fy = 46KSI
PIPES	——	ASTM A53 TYPE E OR S GRADE B

2. ALL WELDING SHALL BE PERFORMED IN ACCORDANCE WITH AMERICAN WELDING SOCIETY (AWS) D1.1-90 STRUCTURAL WELDING CODE. E70XX ELECTRODES SHALL BE USED FOR WELDED SHOP & FIELD CONNECTIONS.
3. ALL BOLTED CONNECTIONS SHALL BE MADE WITH 3/4"Ø ASTM A-325 BOLTS. ALL BOLTED CONNECTIONS SHALL BE CONSIDERED AS BEARING UNLESS NOTED OTHERWISE.
4. ALL BEAM CONNECTIONS ARE TO CONFORM TO AISC STANDARD TWO ANGLE WEB CONNECTIONS CAPABLE OF SUPPORTING 50% OF THE TOTAL UNIFORM LOAD CAPACITY OF THE BEAM OR FOR LOADS INDICATED ON DRAWING. NO CONNECTION SHALL CONSIST OF LESS THAN TWO 3/4"Ø BOLTS OR A WELD DEVELOPING LESS THAN 10 KIPS.
5. ALL FIELD CONNECTIONS SHALL BE BOLTED UNLESS NOTED OTHERWISE. FIELD WELDING IS NOT ALLOWED EXCEPT WHERE SPECIFICALLY INDICATED OR APPROVED.
6. ALL GROUT PADS SHALL HAVE A MINIMUM COMPRESSIVE STRENGTH OF 4000 PSI IN 7 DAYS.
7. ALL ANCHOR BOLTS SHALL BE ASTM A-36.
8. PROVIDE AND HAVE IN PLACE ADEQUATE LATERAL BRACING & VERTICAL SUPPORTS FOR THE SAFE ERECTION AND TRUE ALIGNMENT OF THE STRUCTURAL STEEL. THE CONTRACTOR ASSUMES FULL RESPONSIBILITY FOR THE SAFE ERECTION & TEMPORARY BRACING OF STRUCTURAL STEEL.
9. VERIFY NUMBER AND SIZE OF OPENINGS IN ROOF, WALLS, AND FLOOR WITH ARCHITECTURAL, MECHANICAL AND ELECTRICAL DRAWINGS. SEE STRUCTURAL DRAWINGS AND SPECIFICATIONS, FOR STRUCTURAL REQUIREMENTS. VERIFY ALL DETAILS & INFORMATION WITH THE APPROPRIATE CONTRACTOR
10. ALL DIMENSIONS RELATED TO STRUCTURAL STEEL USED TO SUPPORT EQUIPMENT OR FRAME OPENINGS SHALL BE VERIFIED WITH CERTIFIED AND APPROVED SHOP DRAWINGS OF PURCHASED EQUIPMENT PRIOR TO DETAILING AND FABRICATION.
11. ALL EDGES OF METAL DECK SHALL BE SUPPORTED AT A CHANGE IN DECK SPAN WHETHER SHOWN ON DRAWINGS OR NOT. PROVIDE TUBE STEEL OR A DOUBLE ANGLE BETWEEN JOIST AND METAL DECK.
12. WELD ALL STEEL BEAMS TO BEARING PLATES W/ 5/16x 4" LONG FILLET WELD, EACH SIDE OF BEAM U.N.O.
13. CONTRACTOR TO PROVIDE VERIFICATION AND INSPECTION OF STEEL CONSTRUCTION PER 2015 MBC CODE.

STEEL JOISTS

1. STEEL JOIST DESIGN, FABRICATION AND ERECTION SHALL CONFORM TO THE REQUIREMENTS AND STANDARD SPECIFICATIONS FOR THE STEEL JOIST INSTITUTE AND THE AMERICAN INSTITUTE OF STEEL CONSTRUCTION. ONLY STEEL JOISTS FROM A STEEL JOIST INSTITUTE APPROVED FABRICATORS WILL BE ACCEPTABLE.
2. PROVIDE WELDED HORIZONTAL BRIDGING AND BOLTED DIAGONAL BRIDGING AS REQUIRED PER STEEL JOIST INSTITUTE REQUIREMENTS.
3. ALL CONCENTRATED LOADS DUE TO HANGERS, MECHANICAL EQUIPMENT, ETC. SHALL BE SUPPORTED ONLY AT JOIST PANEL POINTS. PROVIDE ADDITIONAL MEMBERS AS NECESSARY TO MEET THIS REQUIREMENT.
4. DESIGN ROOF JOISTS FOR A NET UPLIFT OF 8 PSF.
5. WELD STEEL JOISTS TO ALL SUPPORTS W/ 3/16" x 3" LONG FILLET WELD EACH SIDE OF JOIST.

METAL ROOF DECK

1. THE FOLLOWING CODE SHALL GOVERN THE DESIGN, FABRICATION, AND INSTALLATION OF ROOF DECK:
   A. DESIGN MANUAL FOR COMPOSITE DECKS, FORM DECK AND ROOF DECKS (STEEL DECKS INSTITUTE, INC.)
2. ROOF DECK SHALL BE 1 1/2", 22 GA TYPE B, GALV. METAL DECK UNLESS NOTED OTHERWISE.
3. ALL ROOF DECK U.N.O. SHALL BE FASTENED TO ALL SUPPORTS & AT EDGES OF DECK PARALLEL TO SPAN, WHICH INCLUDES ALL EDGE ANGLES, EMBEDDED PLATES & ROOF JOISTS WITH 5/8"Ø PUDDLE WELDS AT 6" O.C.
4. PROVIDE ADDITIONAL SUPPORT FRAMING AT OPENINGS IN ROOF PER TYPICAL DETAIL 6/S1.0

NOTE:
CONTRACTOR TO DETERMINE LOCATION OF CONSTRUCTION JOINTS (CSJ). CONSTRUCTION JOINTS TO BE PLACED IN LIEU OF CONTROL JOINTS AT CJ. LOCATIONS INDICATED ON PLANS ONLY.

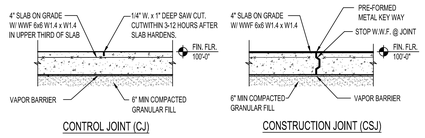

CONTROL JOINT (CJ) CONSTRUCTION JOINT (CSJ)

1 / S1.0 SLAB ON GRADE DETAILS
SCALE: NOT TO SCALE

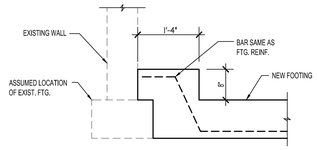

2 / S1.0 NEW @ EXIST FOOTING
SCALE: NOT TO SCALE

NOTE:
BETWEEN GROUT POURS, A HORIZONTAL CONSTRUCTION JOINT SHALL BE FORMED BY STOPPING ALL WYTHES AT THE SAME ELEVATION AND WITH GROUT STOPPING A MINIMUM OF 1 1/2" BELOW A MORTAR JOINT, EXCEPT AT TOP OF WALL

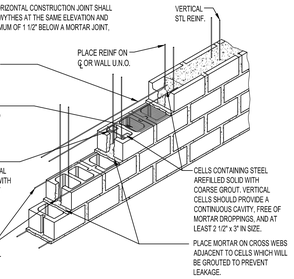

3 / S3.0 LOW LIFT-GROUTING TECHNIQUE GROUT IS PLACED IN LIFT UP TO 5'-0"
SCALE: NOT TO SCALE

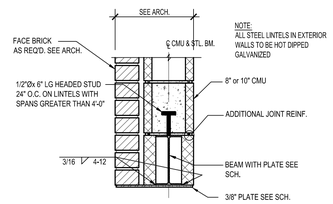

NOTE:
ALL STEEL LINTELS IN EXTERIOR WALLS TO BE HOT DIPPED GALVANIZED

5 / S1.0 TYP. STL. LINTEL SECTION
SCALE: 1 1/2" = 1'-0"

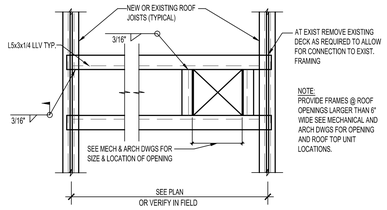

NOTE:
PROVIDE FRAMES @ ROOF OPENINGS LARGER THAN 6" WIDE SEE MECHANICAL AND ARCH DWGS FOR OPENING AND ROOF TOP UNIT LOCATIONS.

6 / S1.0 TYP ROOF OPENING DETAIL
SCALE: NOT TO SCALE

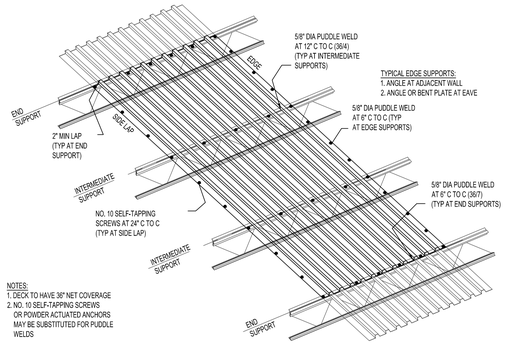

TYPICAL EDGE SUPPORTS:
1. ANGLE AT ADJACENT WALL
2. ANGLE OR BENT PLATE AT EAVE

NOTES:
1. DECK TO HAVE 36" NET COVERAGE
2. NO. 10 SELF-TAPPING SCREWS OR POWDER-ACTUATED ANCHORS MAY BE SUBSTITUTED FOR PUDDLE WELDS

7 / S1.0 TYP ROOF DECK ATTACHMENT
SCALE: 3/8" = 1'-0"

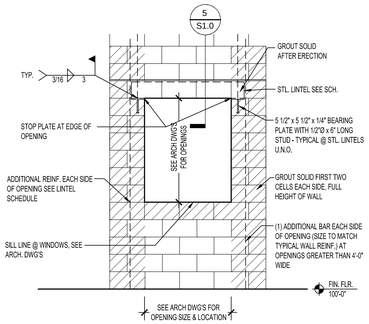

4 / S1.0 TYP. MASONRY OPENING w/ BRICK DTL. (STL. LINTEL)
SCALE: NOT TO SCALE

WA
WAKELY ASSOCIATES, INC. ARCHITECTS
30500 VAN DYKE AVENUE
SUITE M-7
WARREN, MICHIGAN 48093
PH: 586.573.4100
FX: 586.573.0822
www.WakelyAIA.com

KENBROOK ELEMENTARY
FARMINGTON PUBLIC SCHOOLS
31130 BONNET HILL RD, Farmington Hills, MI 48334

PRELIMINARY ■
DESIGN DEVELOPMENT ■
CONSTRUCTION ■
FINAL RECORD □

DRAWN BY JAS
CHECKED BY JWQ

REVISIONS

DATE: 12/13/17

SHEET NO. S1.0

JOB NO. 171712A

SNYDER & STALEY ENGINEERING, P.L.C.
CONSULTING ENGINEERS
3085 BAY ROAD SUITE 6
SAGINAW, MI 48603
PH: (989) 797-1710 FX: (989) 797-1715
PROJECT NO. 17-828-251

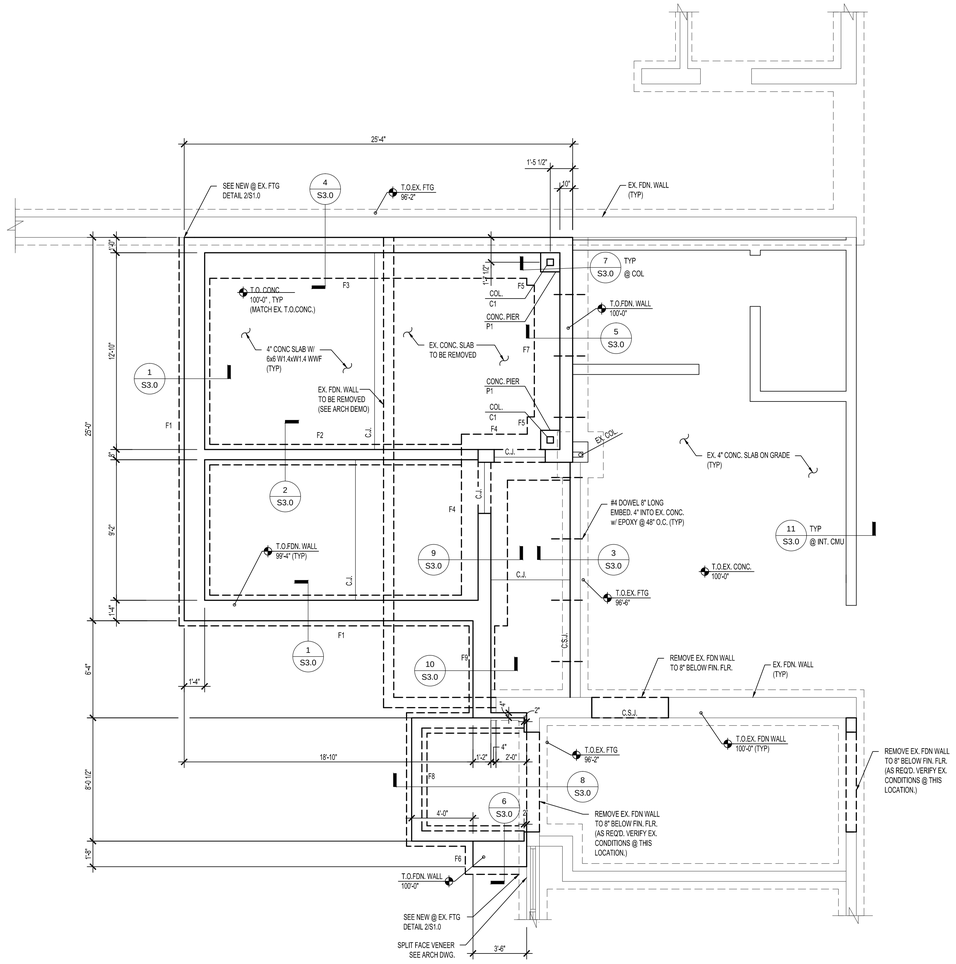

FOUNDATION PLAN

SCALE 1/4" = 1'-0"

NOTE:
1. SEE SHEET S1.0 FOR GENERAL NOTES

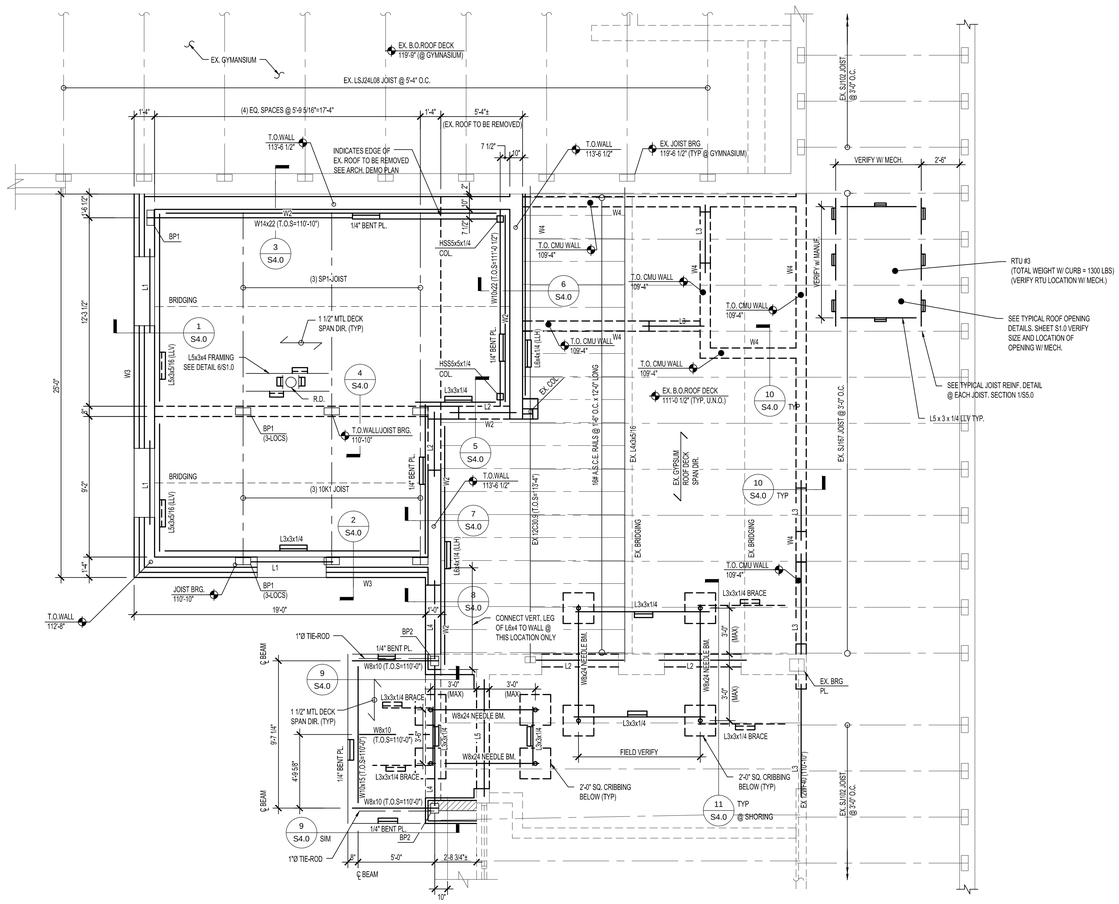

ROOF FRAMING PLAN

SCALE 1/4" = 1'-0"

NOTE:
1. SEE SHEET S1.0 FOR GENERAL NOTES

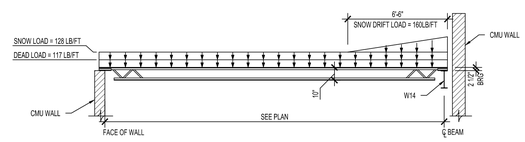

SPECIAL JOIST SP-1

N.T.S.

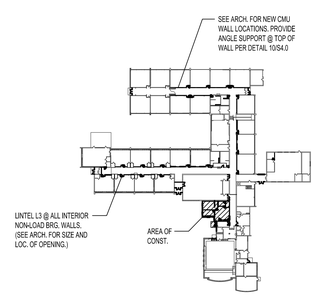

KEY PLAN

N.T.S.

NORTH

FOOTING SCHEDULE

FOOTING MARK	FOOTING SIZE WIDTH x THICKNESS x LENGTH	REINFORCEMENT	TOP OF FTG. ELEV	REMARKS
F1	2'-0"x1'-0"xCONT.	(2) #5 BARS CONT.	96'-2"±	MATCH EX. T.O.FTG. ELEVATION
F2	1'-4"x1'-0"xCONT.	(2) #5 BARS CONT.	96'-2"±	MATCH EX. T.O.FTG. ELEVATION
F3	2'-6"x1'-8"xCONT.	(3) #5 BARS CONT.+ #5's @ 12" O.C.	96'-10"±	OVERPOUR EX. FTG.
F4	3'-0"x1'-0"xCONT.	(3) #5 BARS CONT.+ #5's @ 12" O.C.	96'-6"±	——
F5	3'-0"x1'-8"x3'-0"	(3) #5 BARS EA. WAY	97'-2"±	OVERPOUR EX. FTG.
F6	2'-6"x1'-0"xCONT.	(3) #5 BARS CONT.	96'-2"±	——
F7	2'-6"x1'-8"xCONT.	(3) #5 BARS CONT.+ #5's @ 12" O.C.	97'-2"±	OVERPOUR EX. FTG.
F8	1'-4"x1'-0"xCONT.	(2) #4 BARS CONT.	96'-2"±	STOOP
F9	1'-8"x1'-0"xCONT.	(2) #5 BARS CONT.	96'-6"±	——

PIER SCHEDULE

FOOTING MARK	PIER SIZE WIDTH x LENGTH	REINFORCEMENT	TOP OF PIER, ELEV	REMARKS
P1	1'-3"x1'-3"	(4) #6 VERT. BARS & #3 TIES @ 12" O.C. (U.N.O)	99'-4"	——

COLUMN SCHEDULE

MARK	SIZE	BASE PLATE	ANCHORS	CAP PLATE	REMARKS
C1	HSS5x5x1/4	1/2"x11"x11"	(4) 3/4"Ø A36 ANCHORS EMBEDDED 14" w/ NUT+WASHER	1/2"x11"x8M. FLANGE	——

LINTEL SCHEDULE

MARK	LINTEL SIZE	PLATE SIZE	REMARKS
L1	W8x10	3/8" x 1'-3 1/2" x OPENING	GALV. LINTEL @ EXTERIOR
L2	W8x10	3/8" x 9 1/8" x OPENING	——
L3	W8x10	3/8" x 7 1/8" x OPENING	——
L4	W8x18	3/8" x 11 1/8" x OPENING	GALV. LINTEL @ EXTERIOR
L5	W8x18	3/8" x 11 1/8" x OPENING	GALV. LINTEL @ EXTERIOR

NOTE:
1. PROVIDE 3/8"x5 1/2"x5 1/2" BRG PLATE EACH END. GOUT EX. WALL SOLID @ BEARING AFTER INSTALLATION
2. SHORE OPENING AS REQ'D (NEEDLE BEAM) PRIOR TO REMOVING EXISTING WALL FOR NEW LINTEL

BEARING PLATE SCHEDULE

MARK	SIZE	ANCHORS	REMARKS
BP1	3/8" x 5 1/2" x 12"	(2) 1/2"Ø x 6" LG. HD. STUDS	——
BP2	3/8" x 5 1/2" x 6"	(1) 1/2"Ø x 6" LG. HD. STUDS	——

MASONRY WALL REINFORCEMENT SCHEDULE

MARK	WALL SIZE	VERT. REINF.	REMARKS
W1	10" CMU	#6 BARS @ 16" O.C.	GROUT WALL SOLID EA. CELL FULL HEIGHT
W2	10" CMU	#6 BARS @ 48" O.C.	GROUT WALL SOLID EA. VERT. BAR
W3	8" CMU	#5 BARS @ 48" O.C.	GROUT WALL SOLID EA. VERT. BAR
W4	8" CMU	#5 BARS @ 48" O.C.	GROUT WALL SOLID EA. VERT. BAR

SNYDER & STALEY ENGINEERING, P.L.C.
CONSULTING ENGINEERS
3085 BAY ROAD SUITE 6
SAGINAW, MI 48603
PH: (989) 797-1710 FX: (989) 797-1715
PROJECT NO. 17-828-251

WAKELY ASSOCIATES, INC.
ARCHITECTS

30500 VAN DYKE AVENUE
SUITE M-7
WARREN, MICHIGAN 48093
PH: 586.573.4100
FX: 586.573.0822
www.WakelyAIA.com

KENBROOK ELEMENTARY
FARMINGTON PUBLIC SCHOOLS
31130 BONNET HILL RD, Farmington Hills, MI 48334

PRELIMINARY ■
DESIGN DEVELOPMENT ■
CONSTRUCTION ■
FINAL RECORD □

DRAWN BY JAS
CHECKED BY JWQ

REVISIONS

DATE: 12/13/17

SHEET NO.
S2.0

JOB NO.
171712A

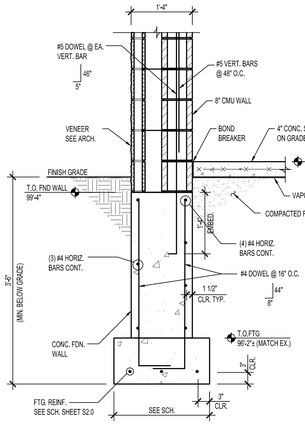

1 S3.0 SECTION
SCALE: 3/4" = 1'-0"

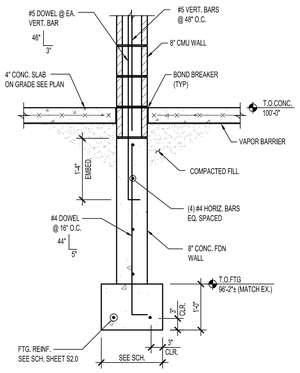

2 S3.0 SECTION
SCALE: 3/4" = 1'-0"

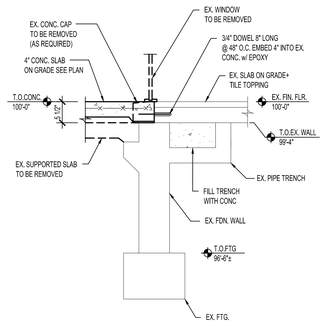

3 S3.0 SECTION
SCALE: 3/4" = 1'-0"

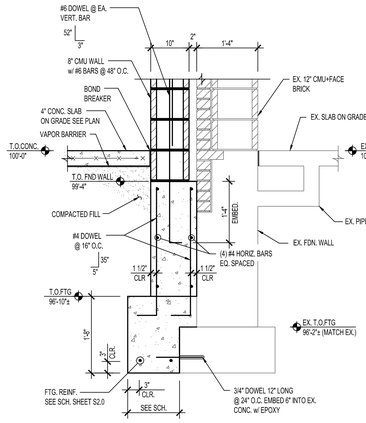

4 S3.0 SECTION
SCALE: 3/4" = 1'-0"

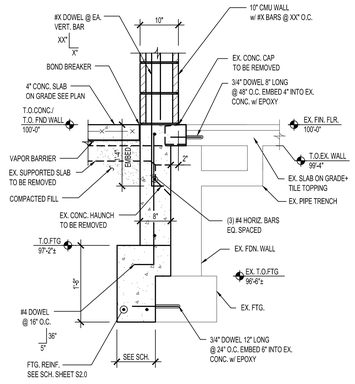

5 S3.0 SECTION
SCALE: 3/4" = 1'-0"

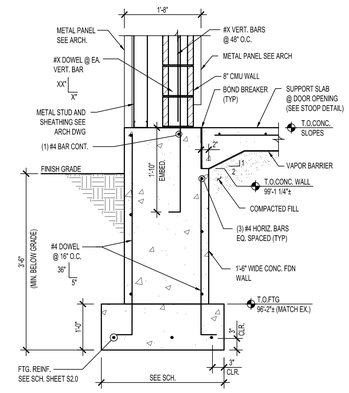

6 S3.0 SECTION
SCALE: 3/4" = 1'-0"

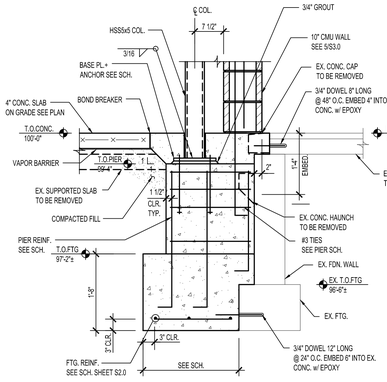

7 S3.0 SECTION
SCALE: 3/4" = 1'-0"

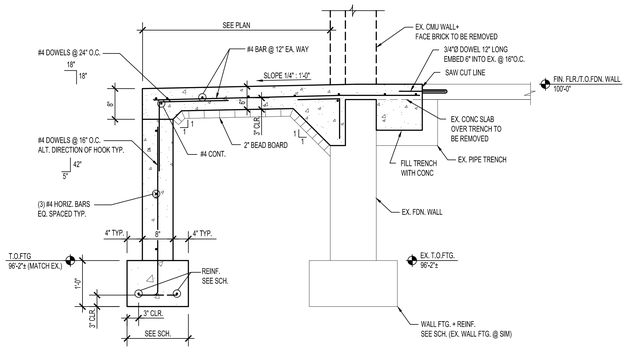

8 S3.0 SECTION
SCALE: 3/4" = 1'-0"

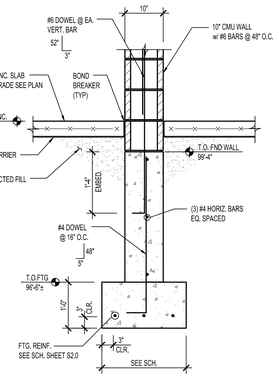

9 S3.0 SECTION
SCALE: 3/4" = 1'-0"

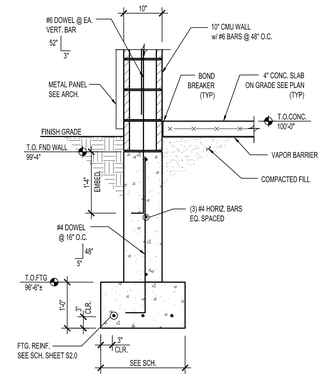

10 S3.0 SECTION
SCALE: 3/4" = 1'-0"

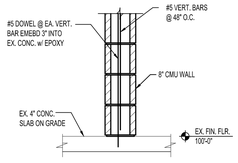

11 S3.0 SECTION
SCALE: 3/4" = 1'-0"

SNYDER & STALEY ENGINEERING, P.L.C.
CONSULTING ENGINEERS
3085 BAY ROAD SUITE 6
SAGINAW, MI 48603
PH: (989) 797-1710 FX: (989) 797-1715
PROJECT NO. 17-828-251

WA
WAKELY ASSOCIATES, INC. ARCHITECTS
30500 VAN DYKE AVENUE
SUITE M-7
WARREN, MICHIGAN 48093
PH: 586.573.4100
FX: 586.573.0822
www.WakelyAIA.com

KENBROOK ELEMENTARY
FARMINGTON PUBLIC SCHOOLS
31130 BONNET HILL RD, Farmington Hills, MI 48334

PRELIMINARY ■
DESIGN DEVELOPMENT ■
CONSTRUCTION ■
FINAL RECORD □

DRAWN BY JAS
CHECKED BY JWQ

REVISIONS

DATE: 12/13/17

SHEET NO.
S3.0

JOB NO.
171712A

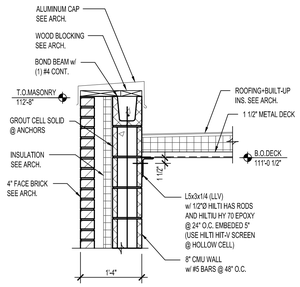

1 / S4.0 SECTION
SCALE: 3/4" = 1'-0"

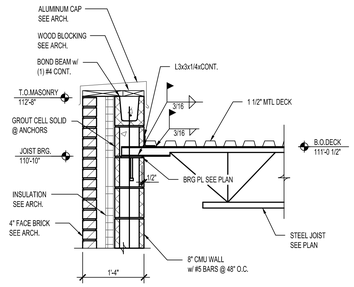

2 / S4.0 SECTION
SCALE: 3/4" = 1'-0"

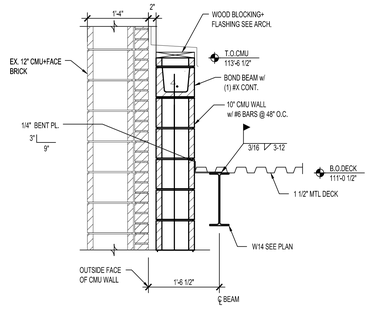

3 / S4.0 SECTION
SCALE: 3/4" = 1'-0"

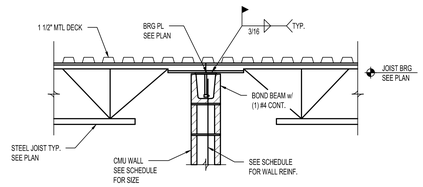

4 / S4.0 SECTION
SCALE: 3/4" = 1'-0"

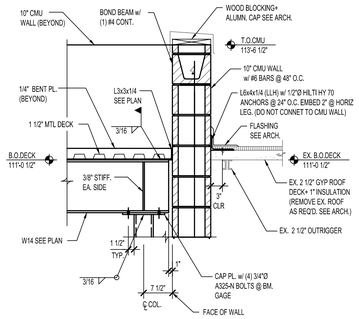

5 / S4.0 SECTION
SCALE: 3/4" = 1'-0"

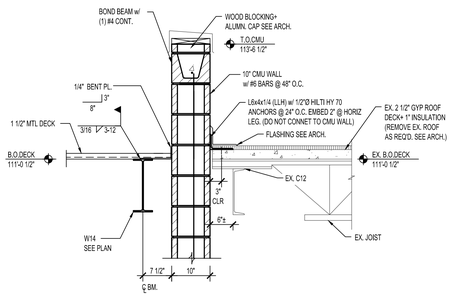

6 / S4.0 SECTION
SCALE: 3/4" = 1'-0"

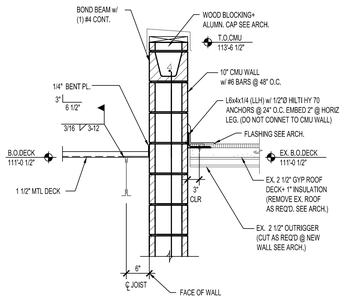

7 / S4.0 SECTION
SCALE: 3/4" = 1'-0"

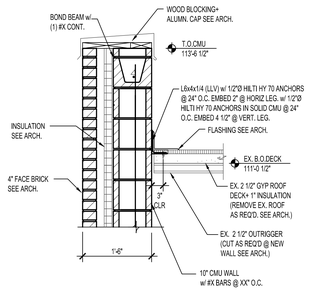

8 / S4.0 SECTION
SCALE: 3/4" = 1'-0"

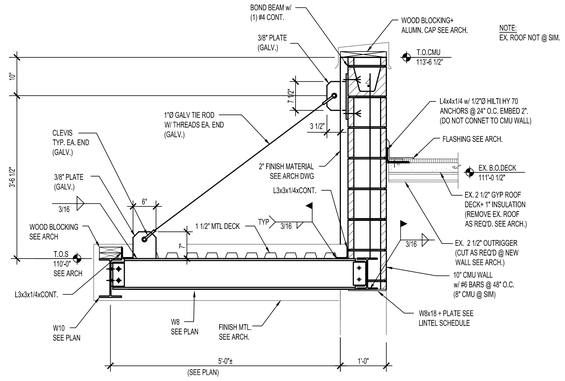

9 / S4.0 SECTION
SCALE: 3/4" = 1'-0"

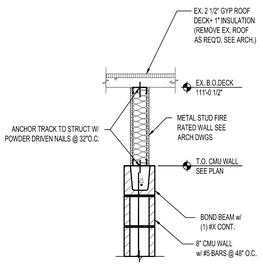

10 / S4.0 SECTION
SCALE: 3/4" = 1'-0"

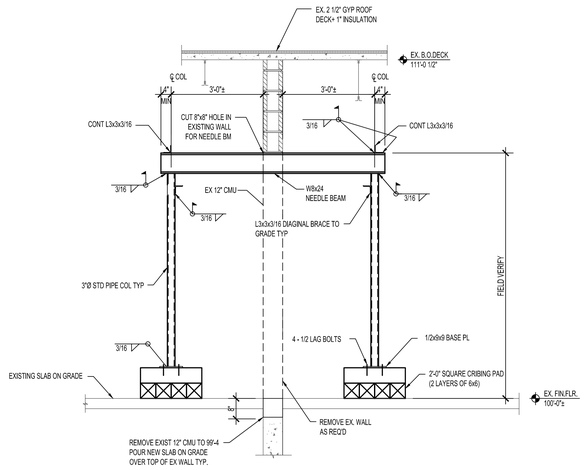

11 / S4.0 SECTION
SCALE: 1/2" = 1'-0"

WA
WAKELY ASSOCIATES, INC. ARCHITECTS
30500 VAN DYKE AVENUE
SUITE M-7
WARREN, MICHIGAN 48093
PH: 586.573.4100
FX: 586.573.0822
www.WakelyAIA.com

KENBROOK ELEMENTARY
FARMINGTON PUBLIC SCHOOLS
31130 BONNET HILL RD, Farmington Hills, MI 48334

PRELIMINARY ■
DESIGN DEVELOPMENT ■
CONSTRUCTION ■
FINAL RECORD □

DRAWN BY JAS
CHECKED BY JWQ

REVISIONS

DATE: 12/13/17

SHEET NO.
S4.0

JOB NO.
171712A

SNYDER & STALEY ENGINEERING, P.L.C.
CONSULTING ENGINEERS
3085 BAY ROAD SUITE 6
SAGINAW, MI 48603
PH: (989) 797-1710 FX: (989) 797-1715
PROJECT NO. 17-828-251

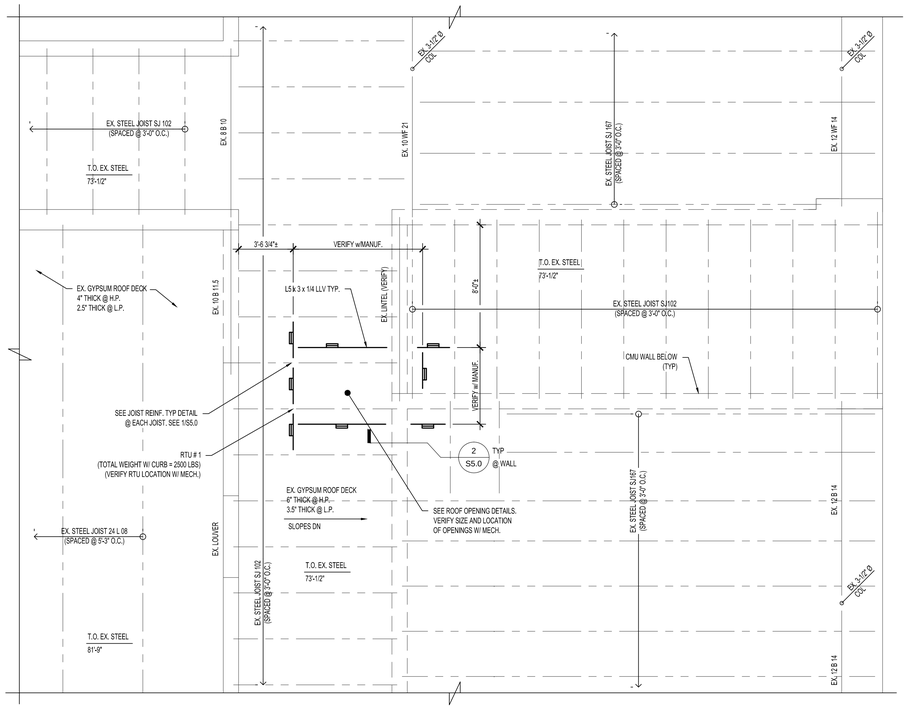

NORTH

PARTIAL ROOF FRAMING PLAN @ RTU #1

SCALE 1/4" = 1'-0"

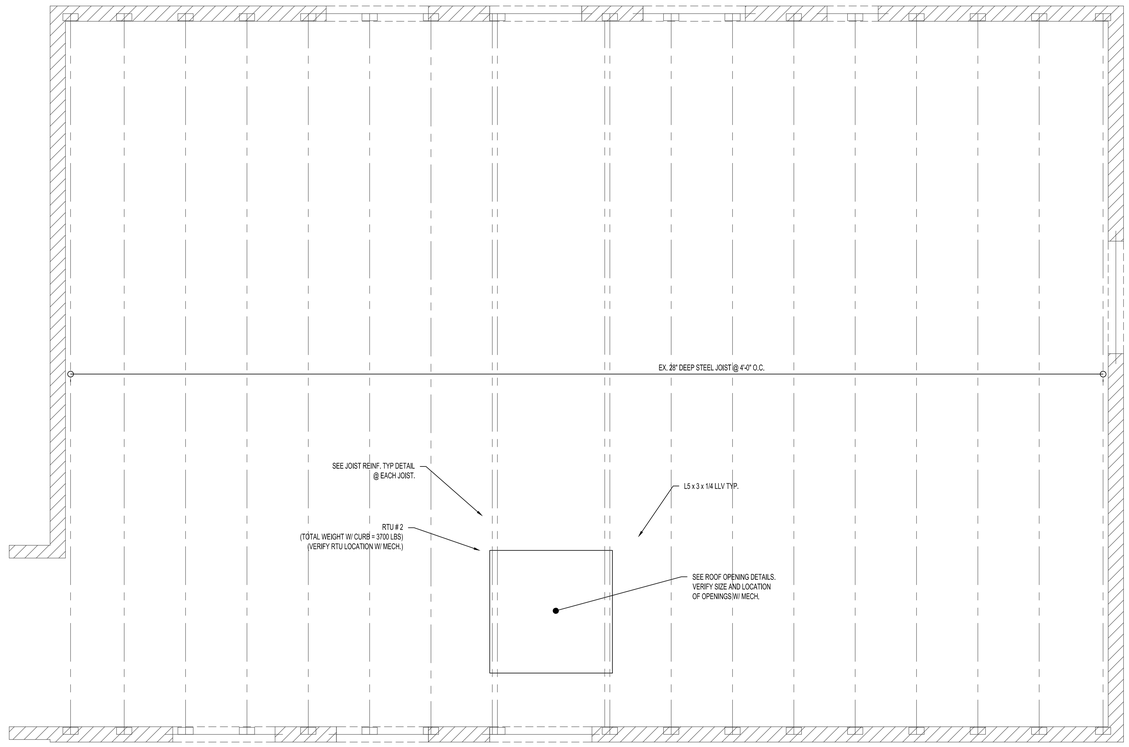

NORTH

PARTIAL ROOF FRAMING PLAN @ RTU #2

SCALE 1/4" = 1'-0"

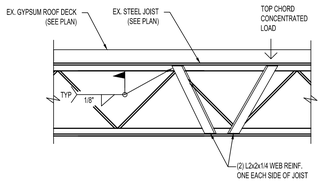

1 / S5.0 JOIST REINF

SCALE: 3/4" = 1'-0"

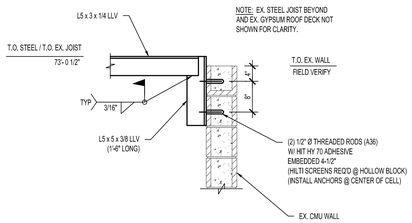

2 / S5.0 SECTION

SCALE: 3/4" = 1'-0"

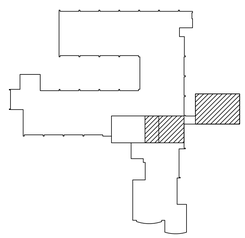

NORTH

KEY PLAN

N.T.S.

SNYDER & STALEY ENGINEERING, P.L.C.
CONSULTING ENGINEERS
3085 BAY ROAD SUITE 6
SAGINAW, MI 48603
PH: (989) 797-1710 FX: (989) 797-1715
PROJECT NO. 17-828-251

WAKELY ASSOCIATES, INC.
ARCHITECTS

30500 VAN DYKE AVENUE
SUITE M-7
WARREN, MICHIGAN 48093
PH: 586.573.4100
FX: 586.573.0822
www.WakelyAIA.com

KENBROOK ELEMENTARY

FARMINGTON PUBLIC SCHOOLS

31130 BONNET HILL RD, Farmington Hills, MI 48334

PRELIMINARY ■
DESIGN DEVELOPMENT ■
CONSTRUCTION ■
FINAL RECORD □

DRAWN BY JAS
CHECKED BY JWQ

REVISIONS

DATE: 12/13/17

SHEET NO.

S5.0

JOB NO.

171712A

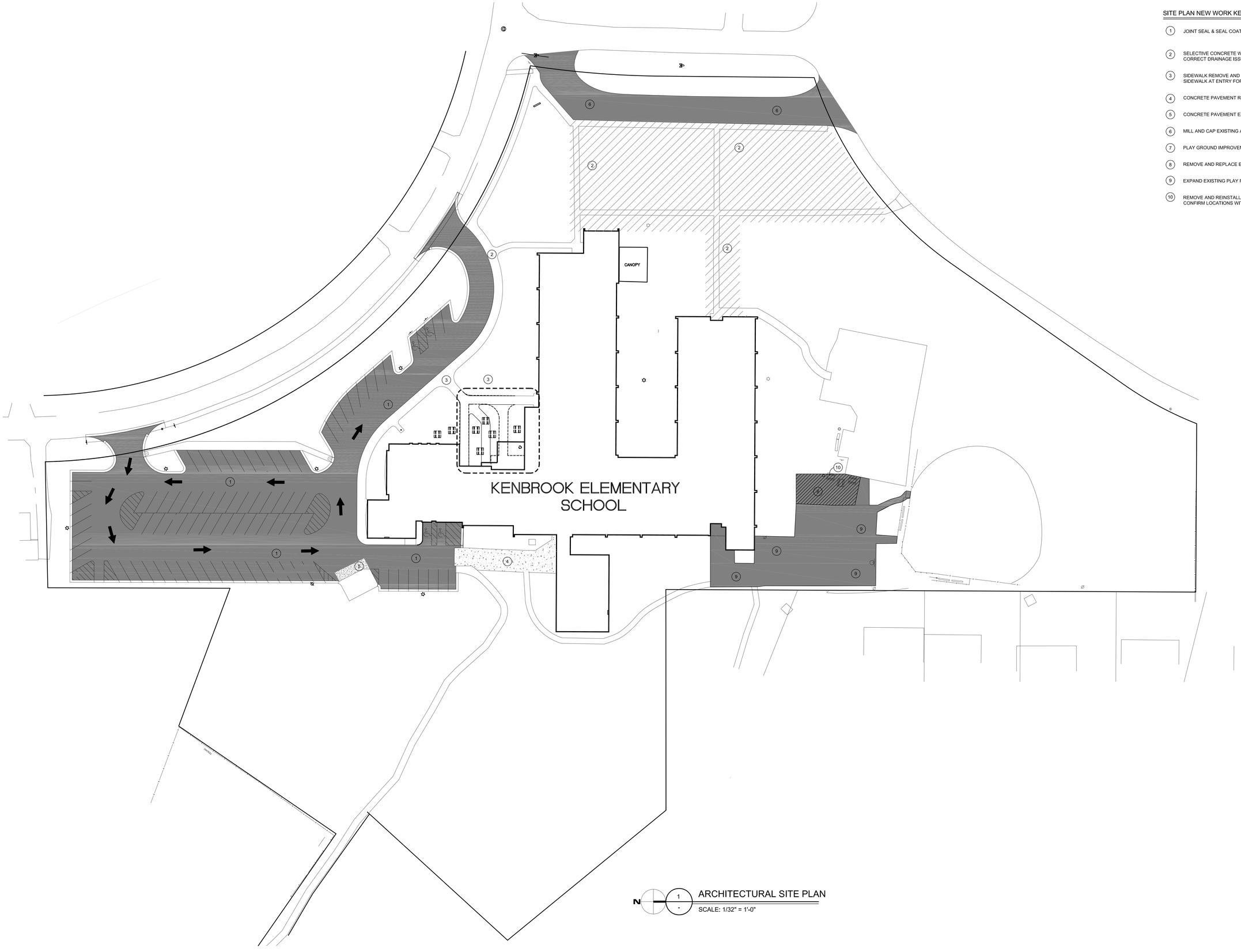

ARCHITECTURAL SITE PLAN

SCALE: 1/32" = 1'-0"

SITE PLAN NEW WORK KEY NOTES:

1. JOINT SEAL & SEAL COAT (SEE SITE ALTERNATE #2)
2. SELECTIVE CONCRETE WALK REPLACEMENT AND REGRADING TO CORRECT DRAINAGE ISSUES
3. SIDEWALK REMOVE AND REPLACE. REDESIGN CONCRETE SIDEWALK AT ENTRY FOR NEW DESIGN. (FINAL DESIGN TDB.)
4. CONCRETE PAVEMENT REMOVE AND REPLACE
5. CONCRETE PAVEMENT EXPANSION
6. MILL AND CAP EXISTING ASPHALT DRIVE
7. PLAY GROUND IMPROVEMENTS (ALLOTMENT - SCOPE TBD)
8. REMOVE AND REPLACE EXISTING PLAY PAD.
9. EXPAND EXISTING PLAY PAD
10. REMOVE AND REINSTALL VERTICAL SUPPORTS AT PICNIC TABLES. CONFIRM LOCATIONS WITH OWNER

WAKELY ASSOCIATES, INC.
ARCHITECTS

30500 VAN DYKE AVENUE
SUITE M-7
WARREN, MICHIGAN 48093
PH: 586.573.4100
FX: 586.573.0822
www.WakelyAIA.com

FARMINGTON PUBLIC SCHOOLS - 2015 BOND
2018 PROJECTS
KENBROOK & BEECHVIEW ELEMENTARY SCHOOLS

KENBROOK ELEMENTARY SCHOOL

ARCHITECTURAL SITE PLAN

PRELIMINARY ☐
DESIGN DEVELOPMENT ☐
CONSTRUCTION ☐
FINAL RECORD ■

DRAWN BY NJL
CHECKED BY BJS

REVISIONS

DATE: December 6, 2017

SHEET NO.
AS1.0KB

JOB NO. 171712A

1 COMPOSITE FLOOR PLAN

SCALE: 1/16" = 1'-0"

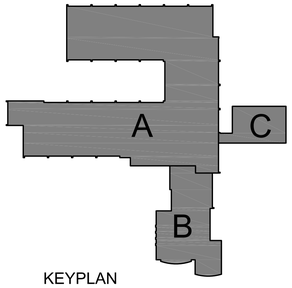

KEYPLAN

N.T.S.

WAKELY ASSOCIATES, INC.
ARCHITECTS

30500 VAN DYKE AVENUE
SUITE M-7
WARREN, MICHIGAN 48093
PH: 586.573.4100
FX: 586.573.0822
www.WakelyAIA.com

FARMINGTON PUBLIC SCHOOLS - 2015 BOND
2018 PROJECTS
KENBROOK & BEECHVIEW ELEMENTARY SCHOOLS

KENBROOK ELEMENTARY SCHOOL

COMPOSTIE FLOOR PLAN

PRELIMINARY ☐
DESIGN DEVELOPMENT ☐
CONSTRUCTION ☐
FINAL RECORD ■

DRAWN BY NJL
CHECKED BY BJS

REVISIONS

DATE: December 6, 2017

SHEET NO.
A1.0KB

JOB NO. 171712A

GENERAL NOTES:

1. REFER TO SHEET G4.1 FOR TYPICAL NOTES, SYMBOLS, GENERAL INFORMATION, AND ABBREVIATIONS.
2. REFER TO SHEET G4.2 FOR REFERENCED KEYNOTES.

KEYPLAN

N.T.S.

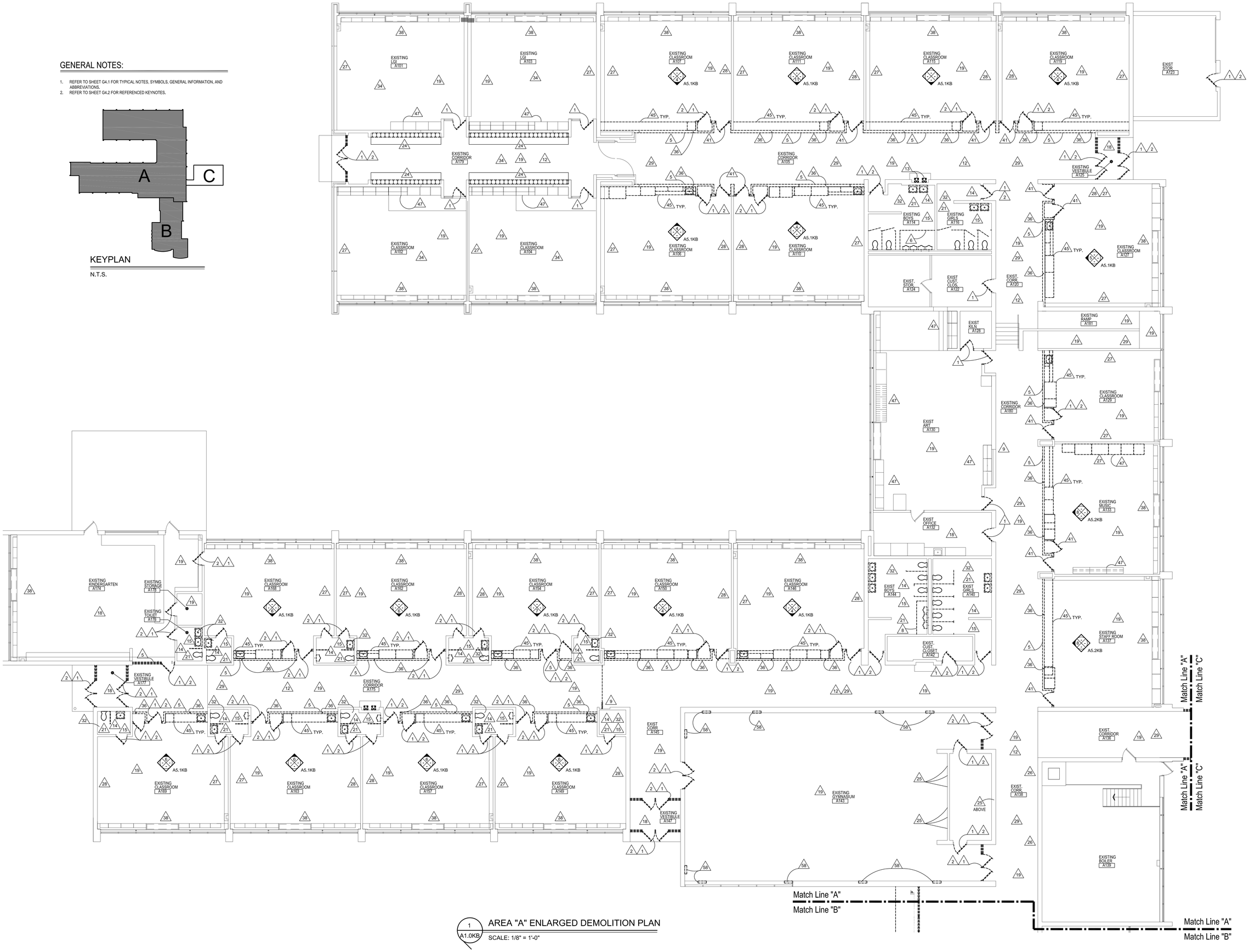

1 A1.0KB AREA "A" ENLARGED DEMOLITION PLAN

SCALE: 1/8" = 1'-0"

WAKELY ASSOCIATES, INC.
ARCHITECTS

30500 VAN DYKE AVENUE
SUITE M-7
WARREN, MICHIGAN 48093
PH: 586.573.4100
FX: 586.573.0822
www.WakelyAIA.com

FARMINGTON PUBLIC SCHOOLS - 2015 BOND
2018 PROJECTS
KENBROOK & BEECHVIEW ELEMENTARY SCHOOLS

KENBROOK ELEMENTARY SCHOOL

AREA "A" ENLARGED DEMO PLAN

PRELIMINARY ☐
DESIGN DEVELOPMENT ☐
CONSTRUCTION ■
FINAL RECORD ☐

DRAWN BY NJL
CHECKED BY BJS

REVISIONS

DATE: December 12, 2017

SHEET NO.

AD1.1KB

JOB NO. 171712A

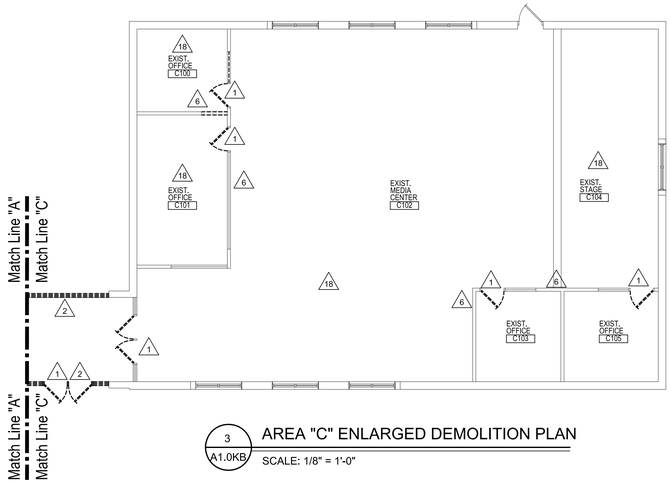

3 / A1.0KB — AREA "C" ENLARGED DEMOLITION PLAN

SCALE: 1/8" = 1'-0"

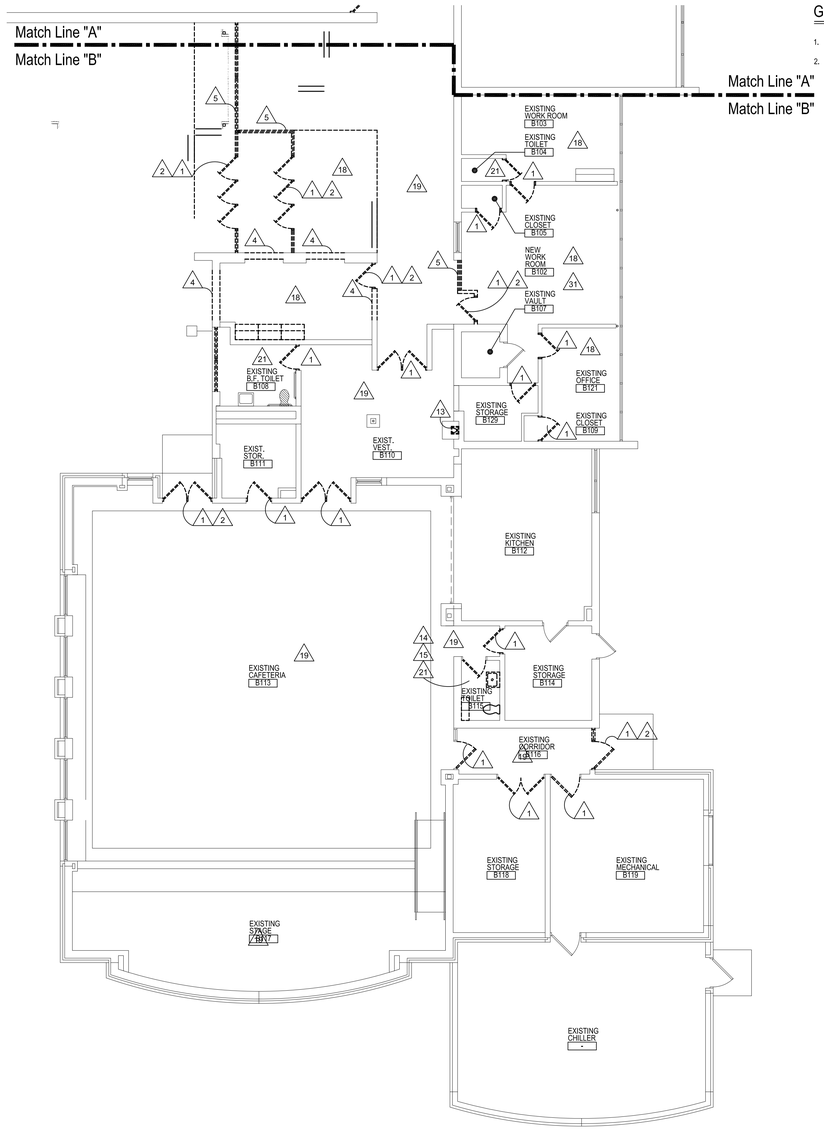

1 / A1.0KB — AREA "B" ENLARGED DEMOLITION PLAN

SCALE: 1/8" = 1'-0"

GENERAL NOTES:

1. REFER TO SHEET G4.1 FOR TYPICAL NOTES, SYMBOLS, GENERAL INFORMATION, AND ABBREVIATIONS.
2. REFER TO SHEET G4.2 FOR REFERENCED KEYNOTES.

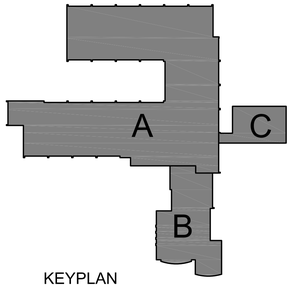

KEYPLAN

N.T.S.

WAKELY ASSOCIATES, INC.
ARCHITECTS

30500 VAN DYKE AVENUE
SUITE M-7
WARREN, MICHIGAN 48093
PH: 586.573.4100
FX: 586.573.0822
www.WakelyMA.com

FARMINGTON PUBLIC SCHOOLS - 2015 BOND

2018 PROJECTS

KENBROOK & BEECHVIEW ELEMENTARY SCHOOLS

KENBROOK ELEMENTARY SCHOOL

AREA "B" & "C" ENLARGED NEW WORK PLANS

PRELIMINARY ☐
DESIGN DEVELOPMENT ☐
CONSTRUCTION ☐
FINAL RECORD ■

DRAWN BY NJL
CHECKED BY BJS

REVISIONS

DATE: December 6, 2017

SHEET NO.

AD1.2KB

JOB NO. 171712A

GENERAL NOTES:

1. REFER TO SHEET G4.1 FOR TYPICAL NOTES, SYMBOLS, GENERAL INFORMATION, AND ABBREVIATIONS.
2. REFER TO SHEET G4.2 FOR REFERENCED KEYNOTES.

KEYPLAN

N.T.S.

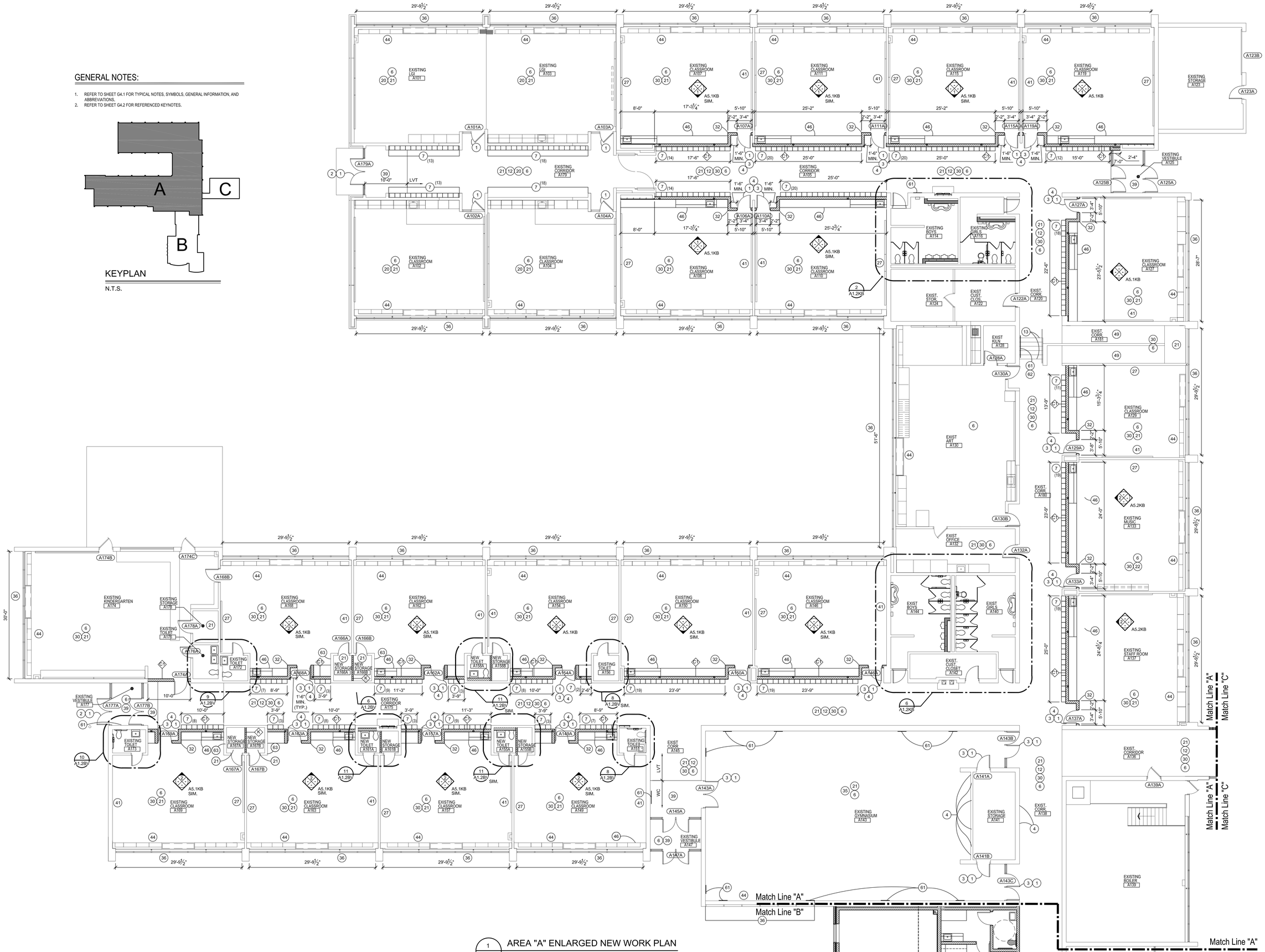

1 A1.0KB AREA "A" ENLARGED NEW WORK PLAN

SCALE: 1/8" = 1'-0"

WAKELY ASSOCIATES, INC.
ARCHITECTS

30500 VAN DYKE AVENUE
SUITE M-7
WARREN, MICHIGAN 48093
PH: 586.573.4100
FX: 586.573.0822
www.WakelyAIA.com

FARMINGTON PUBLIC SCHOOLS - 2015 BOND
2018 PROJECTS
KENBROOK & BEECHVIEW ELEMENTARY SCHOOLS

KENBROOK ELEMENTARY SCHOOL

AREA "A" ENLARGED NEW WORK PLAN

PRELIMINARY ☐
DESIGN DEVELOPMENT ☐
CONSTRUCTION ■
FINAL RECORD ☐

DRAWN BY NJL
CHECKED BY BJS

REVISIONS

DATE: December 12, 2017

SHEET NO.

A1.1KB

JOB NO. 171712A

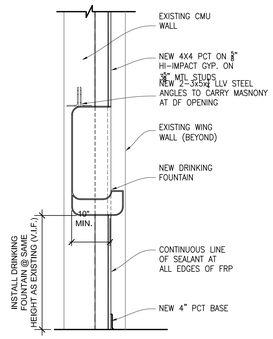

7 / A1.2BV — TYPICAL DRINKING FOUNTAIN SECTION DETAIL

SCALE: 3/4" = 1'-0"

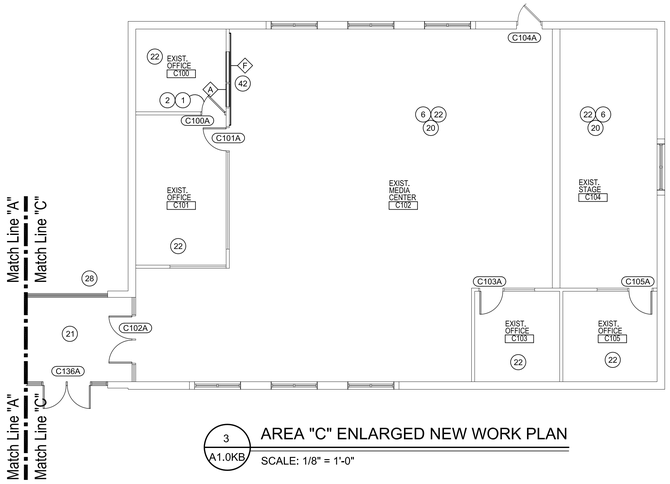

3 / A1.0KB — AREA "C" ENLARGED NEW WORK PLAN

SCALE: 1/8" = 1'-0"

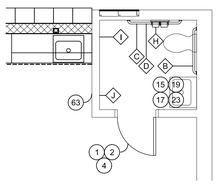

8 / A1.2BV — ENLARGED WORK PLAN @ SINGLE TOILET

SCALE: 1/2" = 1'-0"

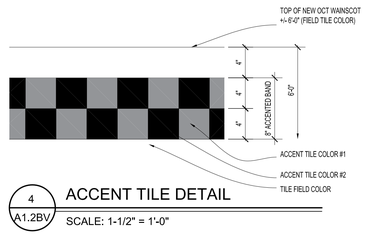

4 / A1.2BV — ACCENT TILE DETAIL

SCALE: 1-1/2" = 1'-0"

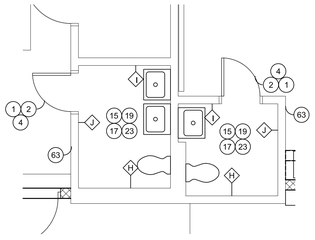

9 / A1.2BV — ENLARGED WORK PLAN @ SINGLE TOILET

SCALE: 1/2" = 1'-0"

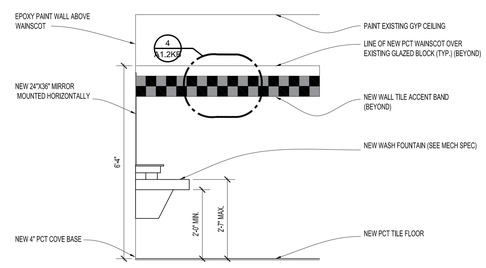

5 / A1.2BV — WALL SECTION - B130 AND B128

SCALE: 1/2" = 1'-0"

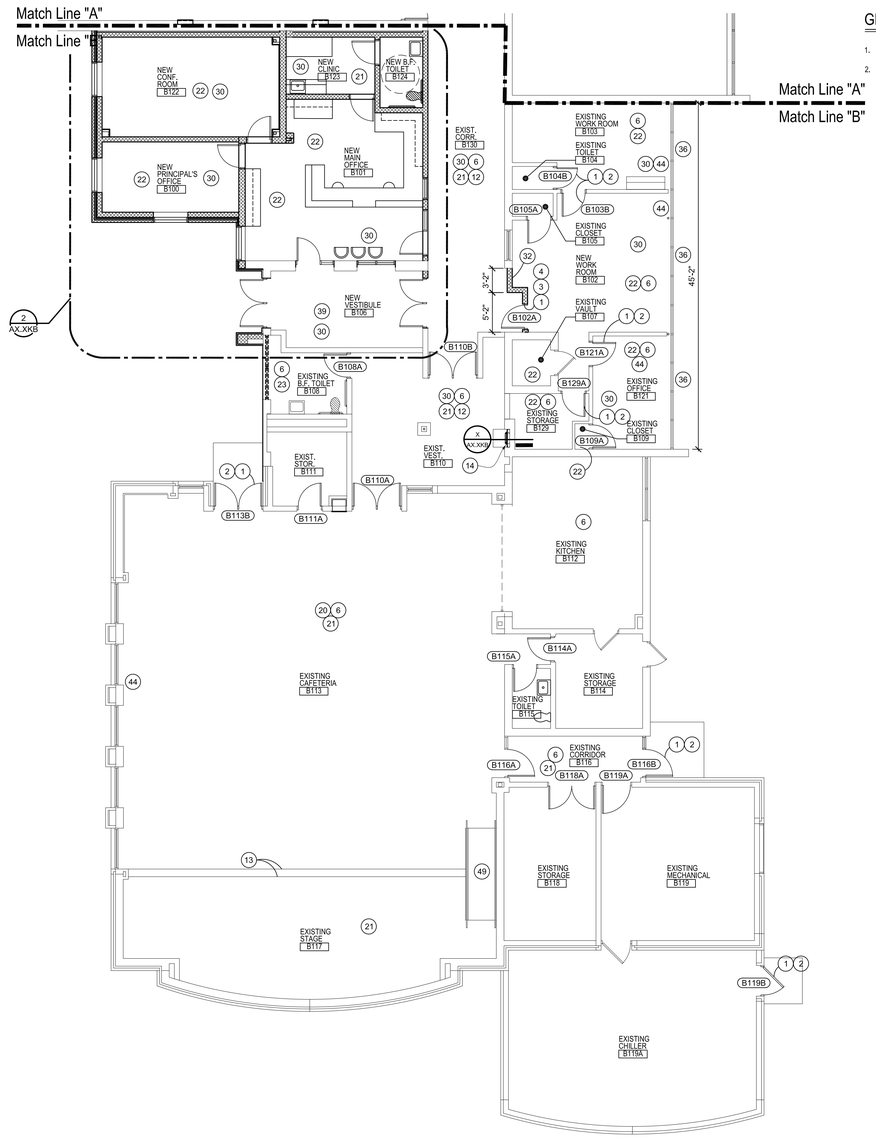

1 / A1.0KB — AREA "B" ENLARGED NEW WORK PLAN

SCALE: 1/8" = 1'-0"

GENERAL NOTES:

1. REFER TO SHEET G4.1 FOR TYPICAL NOTES, SYMBOLS, GENERAL INFORMATION, AND ABBREVIATIONS.
2. REFER TO SHEET G4.2 FOR REFERENCED KEYNOTES.

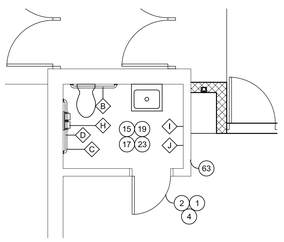

10 / A1.2BV — ENLARGED WORK PLAN @ SINGLE TOILET

SCALE: 1/2" = 1'-0"

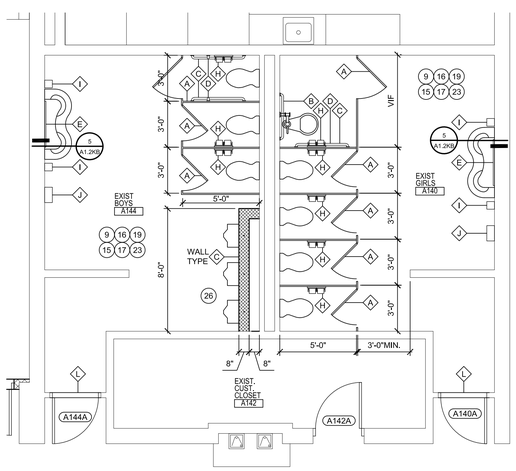

6 / A1.0KB — ENLARGED NEW WORK PLAN @ BATHROOMS A114 & A116

SCALE: 1/4" = 1'-0"

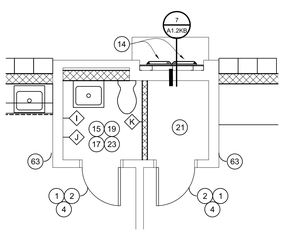

11 / A1.2BV — ENLARGED WORK PLAN @ SINGLE TOILET

SCALE: 1/2" = 1'-0"

TOILET ACCESSORY LEGEND:

- A — TOILET PARTITION
- B — 36" GRAB BAR
- C — 42" GRAB BAR
- D — 18" VERTICAL GRAB BAR
- E — 36" x 36" MIRROR
- F — URINAL SCREEN
- G — 24" x 36" MIRROR
- H — TOILET PAPER HOLDER (BY OWNER)
- I — SOAP DISPENSOR (BY OWNER)
- J — PAPER TOWEL DISPENSER (BY OWNER)
- K — SANITARY NAPKIN DISPOSAL
- L — MARBLE THRESHOLD

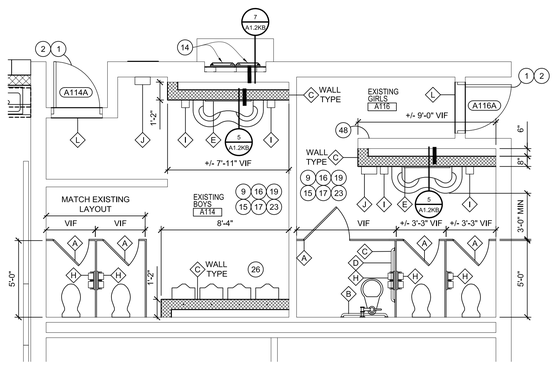

2 / A1.1KB — ENLARGED NEW WORK PLAN @ BATHROOMS A114 & A116

SCALE: 1/4" = 1'-0"

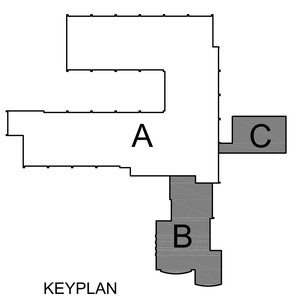

KEYPLAN

N.T.S.

WAKELY ASSOCIATES, INC. ARCHITECTS

30500 VAN DYKE AVENUE
SUITE M-7
WARREN, MICHIGAN 48093
PH: 586.573.4100
FX: 586.573.0822
www.WakelyAIA.com

FARMINGTON PUBLIC SCHOOLS - 2015 BOND
2018 PROJECTS
KENBROOK & BEECHVIEW ELEMENTARY SCHOOLS

KENBROOK ELEMENTARY SCHOOL

AREA "B" & "C" ENLARGED NEW WORK PLANS

PRELIMINARY ☐
DESIGN DEVELOPMENT ☐
CONSTRUCTION ■
FINAL RECORD ☐

DRAWN BY NJL
CHECKED BY BJS

REVISIONS

DATE: December 12, 2017

SHEET NO.

A1.2KB

JOB NO. 171712A

GENERAL NOTES:

1. REFER TO SHEET G4.1 FOR TYPICAL NOTES, SYMBOLS, GENERAL INFORMATION, AND ABBREVIATIONS.
2. REFER TO SHEET G4.2 FOR REFERENCED KEYNOTES.

KEYPLAN

N.T.S.

1 A1.0KB AREA "A" ENLARGED REFLECTEDCEILING PLAN

SCALE: 1/8" = 1'-0"

WAKELY ASSOCIATES, INC.
ARCHITECTS

30500 VAN DYKE AVENUE
SUITE M-7
WARREN, MICHIGAN 48093
PH: 586.573.4100
FX: 586.573.0822
www.WakelyAIA.com

FARMINGTON PUBLIC SCHOOLS - 2015 BOND
2018 PROJECTS
KENBROOK & BEECHVIEW ELEMENTARY SCHOOLS

KENBROOK ELEMENTARY SCHOOL

AREA "A" REFLECTED CEILING PLAN

PRELIMINARY ☐
DESIGN DEVELOPMENT ☐
CONSTRUCTION ■
FINAL RECORD ☐

DRAWN BY NJL
CHECKED BY BJS

REVISIONS

DATE: December 12, 2017

SHEET NO.

A2.1KB

JOB NO. 171712A

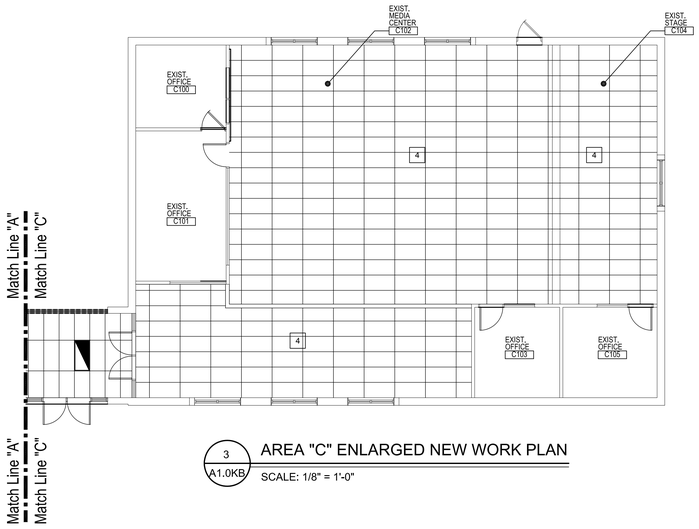

3 A1.0KB AREA "C" ENLARGED NEW WORK PLAN

SCALE: 1/8" = 1'-0"

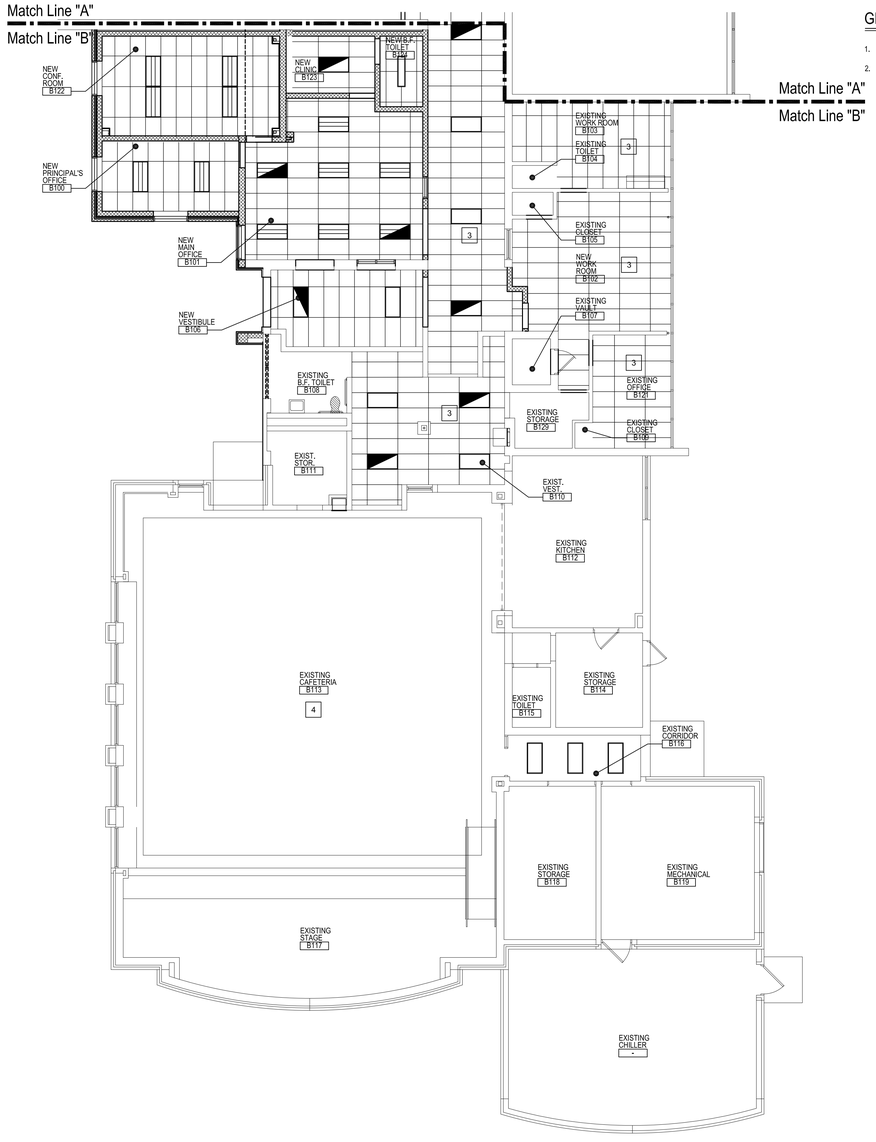

1 A1.0KB AREA "B" REFLECTED CEILING PLAN

SCALE: 1/8" = 1'-0"

GENERAL NOTES:

1. REFER TO SHEET G4.1 FOR TYPICAL NOTES, SYMBOLS, GENERAL INFORMATION, AND ABBREVIATIONS.
2. REFER TO SHEET G4.2 FOR REFERENCED KEYNOTES.

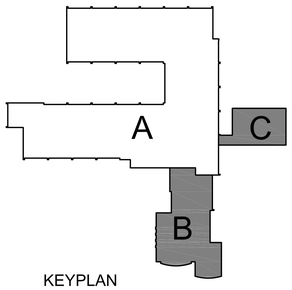

KEYPLAN

N.T.S.

WAKELY ASSOCIATES, INC.
ARCHITECTS

30500 VAN DYKE AVENUE
SUITE M-7
WARREN, MICHIGAN 48093
PH: 586.573.4100
FX: 586.573.0822
www.WakelyAIA.com

FARMINGTON PUBLIC SCHOOLS - 2015 BOND

2018 PROJECTS

KENBROOK & BEECHVIEW ELEMENTARY SCHOOLS

KENBROOK ELEMENTARY SCHOOL

AREA "B" & "C" RECFLECTED CEILING PLANS

PRELIMINARY ☐
DESIGN DEVELOPMENT ☐
CONSTRUCTION ☐
FINAL RECORD ■

DRAWN BY NJL
CHECKED BY BJS

REVISIONS

DATE: December 6, 2017

SHEET NO.

A2.2KB

JOB NO. 171712A

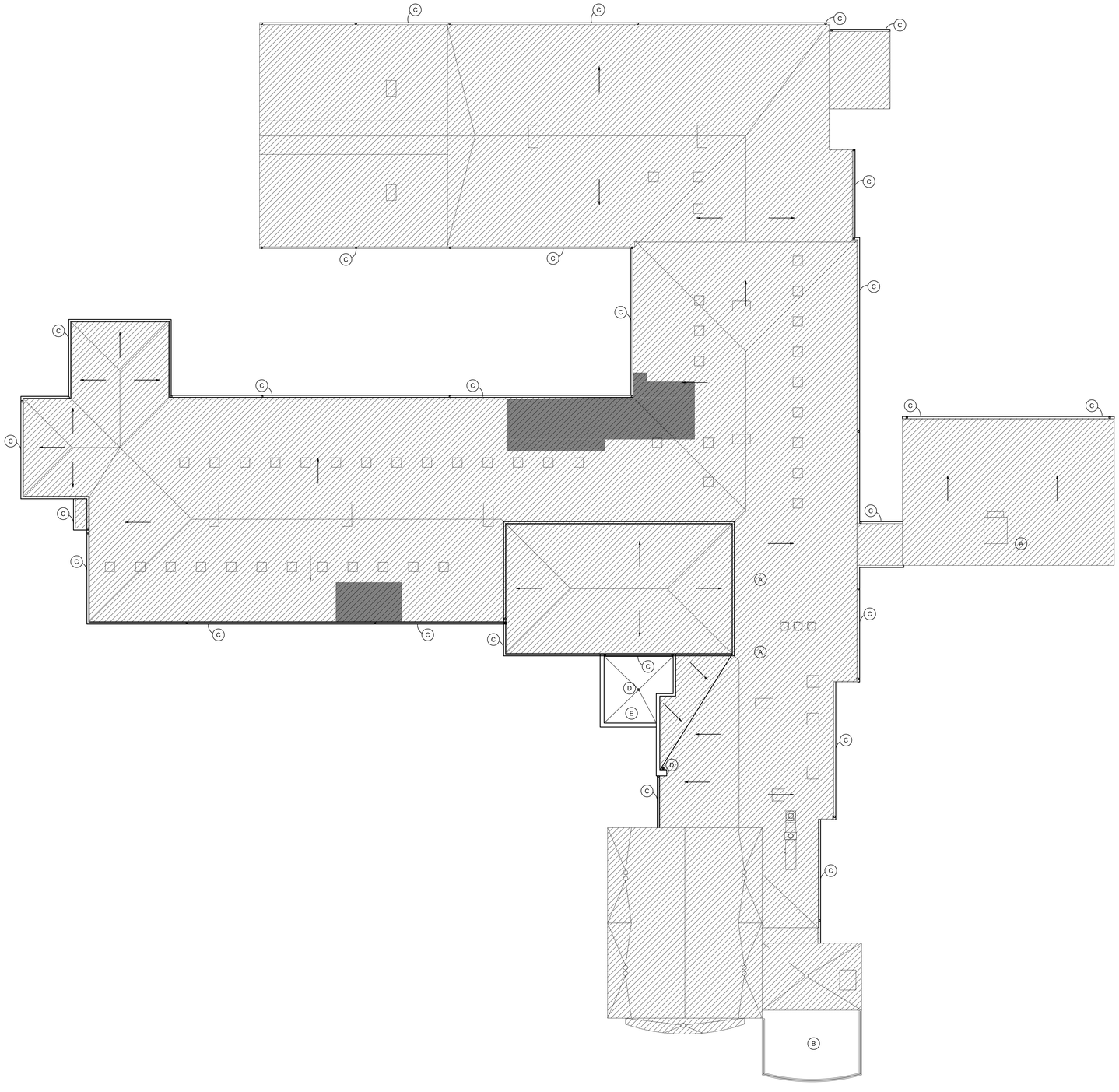

1 ROOF FLOOR PLAN
SCALE: 1/16" = 1'-0"

N

GENERAL NOTES:

1. REFER TO SHEET G4.1 FOR TYPICAL NOTES, SYMBOLS, GENERAL INFORMATION, AND ABBREVIATIONS.
2. REFER TO SHEET G4.2 FOR REFERENCED KEYNOTES.

ROOF PLAN LEGEND:

NEW SINGLE PLY ROOF MEMBRANE OVER NEW 1" RIGID INSULATION BOARD OVER EXISTING BUILT-UP ROOF SYSTEM (REMOVE ALL LOOSE BALLAST) REMOVE EXISTING METAL COPING AND PROVIDE NEW METAL COPING ALONG ENTIRE PERIMETER OF ROOF TO MATCH HEIGHT AND PROFILE OF EXISTING COPING (VIF) COLOR TBD.

REMOVE EXISTING ROOF SYSTEM & WET INSULATION DOWN TO ROOF DECK & INSTALL NEW RIGID INSULATION (MATCH EXISTING THICKNESS +/-4" VIF) AND SINGLE PLY MEMBRANE ROOF SYSTEM - REFER TO RTA ROOF REPORT FOR ACTUAL DIMENSIONS.

LOCATIONS SHOWN ARE APPROXIMATE AND CONTRACTOR MUST VERIFY EXTENT OF WET INSULATION IN FIELD.REFER TO RTA ROOF REPORT FOR ACTUAL DIMENSIONS.

DIRECTION OF SLOPE (V.I.F.)

ROOF PLAN NOTES:

(A) NEW ROOF TOP EQUIPMENT (SEE MECHANICAL DWGS). AT LOCATIONS WITH EXISTING ROOFING MATERIAL TO REMAIN, CUT & PATCH EXISTING ROOFING AS REQ'D PROVIDE NEW FLASHING, SUPPORT CURBS & NEW STRUCTURAL STEEL ANGLE ROOF FRAMING AS REQ'D - REFER TO SHEET A3.1FN AND STRUCTURAL DRAWINGS.

(B) OPEN COURTYARD

(C) INSTALL NEW COMMERCIAL GUTTERS AND DOWNSPOUTS, MATCH EXISTING LAYOUT.

(D) NEW ROOF SUMP

(E) NEW SINGLE PLY ROOF AT ADDITION.

WA

WAKELY ASSOCIATES, INC.
ARCHITECTS

30500 VAN DYKE AVENUE
SUITE M-7
WARREN, MICHIGAN 48093
PH: 586.573.4100
FX: 586.573.0822
www.WakelyAIA.com

FARMINGTON PUBLIC SCHOOLS - 2015 BOND
2018 PROJECTS
KENBROOK & BEECHVIEW ELEMENTARY SCHOOLS

KENBROOK ELEMENTARY SCHOOL

ROOF PLAN

PRELIMINARY ☐
DESIGN DEVELOPMENT ☐
CONSTRUCTION ■
FINAL RECORD ☐

DRAWN BY NJL
CHECKED BY BJS

REVISIONS

DATE: December 6, 2017

SHEET NO.
A3.0KB

JOB NO. 171712A

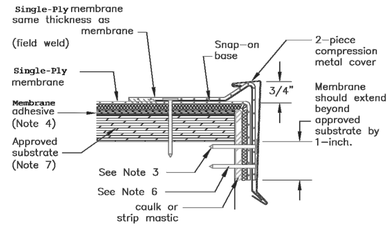

Note 1: This detail is not allowed when roof slope exceeds 2-inch per 12-inch.

Note 2: A wood nailer is required if one or more inches of insulation is used. Top of wood nailer is to be flush with top of insulation. Wood nailer must extend at least 1/2-inch beyond the horizontal edge of the snap-on base.

Note 3: The fasteners used to attach the snap-on base and the membrane to the nailer or into an approved structural surface must be spaced no greater than 6-inches on center. When installing within 10-feet of an outside corner the fastening pattern is 3-inches on center.

Note 4: For approved adhesives refer to the membrane Roofing System specification.

Note 5: Allow for 1/8-inch expansion gap between 10-foot lengths of snap-on base. Overlap the snap-on covers by 2-inches between 10-foot lengths.

Note 6: When installing this detail with a 6 to 13-inch wide metal cover, fasteners must be located within 2-inches of the kick-out.

Note 7: For substrate options see the membrane Roofing System specification.

1 ROOF PARAPET DETAIL

NO SCALE

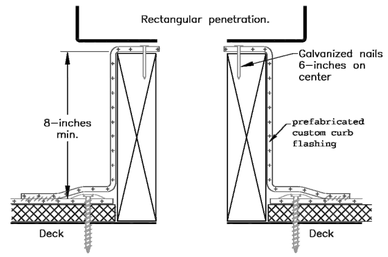

Note:
Perimeter fastening of the deck membrane will be the same fastening pattern as the field membrane, max. 18-inches on center, and no less than one fastener per side.

2 NEW ROOF CURB DETAIL

NO SCALE

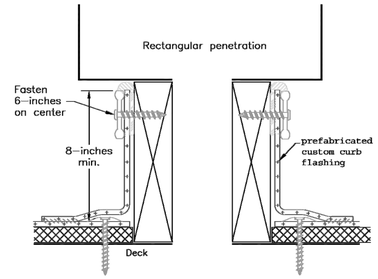

Note 1: Perimeter fastening of the deck membrane will be the same fastening pattern as the field membrane, max. 18-inches on center, and no less than one fastener per side.

Note 2: All termination bar to have a fastener 1-inch max. from each corner.

3 EXISTING ROOF CURB DETAIL

NO SCALE

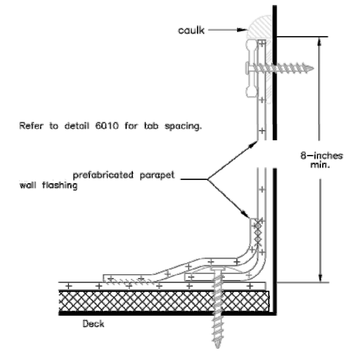

Note 1: Fascia bar and cover may be used in place of the termination bar.

Note 2: The substrate must be free and clear of debris at anc below the termination point.

Note 3: When attaching the parapet flashing to the substrate, t appropriate fastener must be used. The fastener for th wall flashing may be different than the fastener used c the horizontal roof decking.

4 WALL TERMINATION DETAIL

NO SCALE

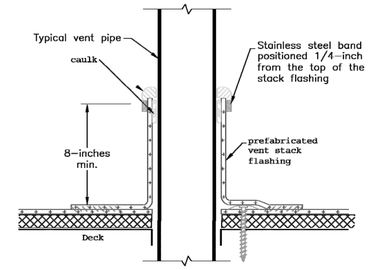

Note 1: If a lead flashingis present on the pipe, it must be removed before a stack flaashingis installed.

Note 2: Membrane attachment around the penetration will be the same as the deck membrane, max. 18-inches on center, and a minimum of one plate/fastner per flashing.

5 VENT STACK/PIPE PENETRATION DETAIL

NO SCALE

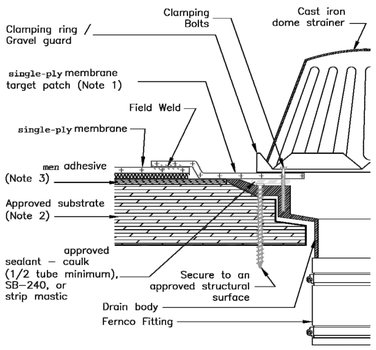

Note 1: Target patch must extend beyond drain sump so that no hot-air welding is done within the sump. If no sump is present the target patch must extend beyond the drain assembly a minimum of 12 inches in all directions. The target patch must be the same mil thickness as the roof memebrane.

Note 2: For substrate options refer to of the membrane Roofing System specification.

Note 3: For approved adhesives refer to of the membrane Roofing System specification.

6 ROOF SUMP DETAIL

NO SCALE

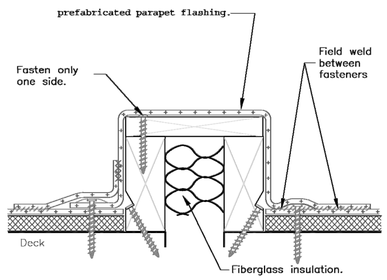

Note 1: Tabs that are parallel to the expansion joint must be mechanically fastened with the same fastening pattern used on the membrane in the field area.

Note 2: Leave the membrane covering the expansion joint loose enough to allow for movement of the building on either side of the joint.

7 ROOF CURB DETAIL

NO SCALE

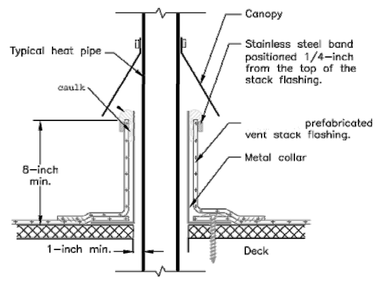

Note 1: Membrane attachment around the penetration will be the same as the deck membrane, max. 18-inches on center, and a minimum one plate/fastener per flashing.

Note 2: This detail required around pipes that exceed 120°F, including all insulated chimney pipes.

Note 3: A minimum of 1-inch air space is required between collar and hot pipes having temperatures greater than 120° F. Position canopy to allow air flow above termination.

8 PIPE DETAIL

NO SCALE

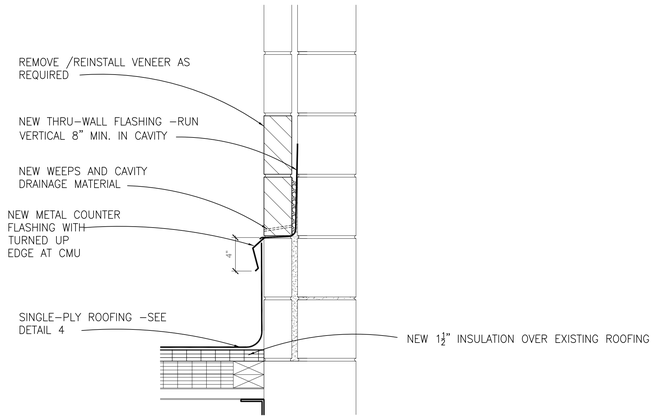

9 SECTION DETAIL AT NEW FLASHING/ WEEPS

SCALE: 1 1/2" = 1'-0"

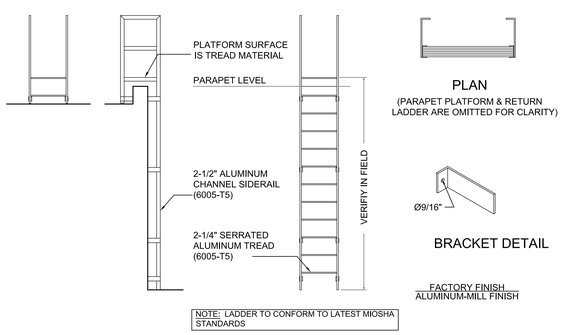

10 ROOF LADDER DETAILS

S C A L E : 1/4" = 1' - 0"

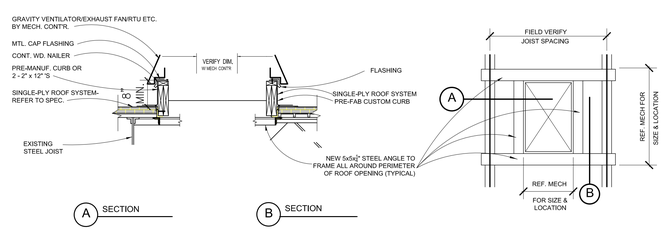

11 TYPICAL ROOF CURB DETAIL

NO SCALE

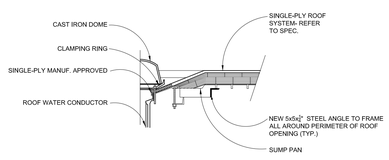

SECTION

12 TYPICAL ROOF SUMP DETAIL

NO SCALE

WA

WAKELY ASSOCIATES, INC.
ARCHITECTS

30500 VAN DYKE AVENUE
SUITE M-7
WARREN, MICHIGAN 48093
PH: 586.573.4100
FX: 586.573.0822
www.WakelyAIA.com

FARMINGTON PUBLIC SCHOOLS - 2015 BOND
2018 PROJECTS
KENBROOK & BEECHVIEW ELEMENTARY SCHOOLS

KENBROOK ELEMENTARY

ROOF DETAILS

PRELIMINARY ☐
DESIGN DEVELOPMENT ☐
CONSTRUCTION ☐
FINAL RECORD ■

DRAWN BY NJL
CHECKED BY BJS

REVISIONS

DATE: December 6, 2017

SHEET NO.

A3.1KB

JOB NO. 171712A

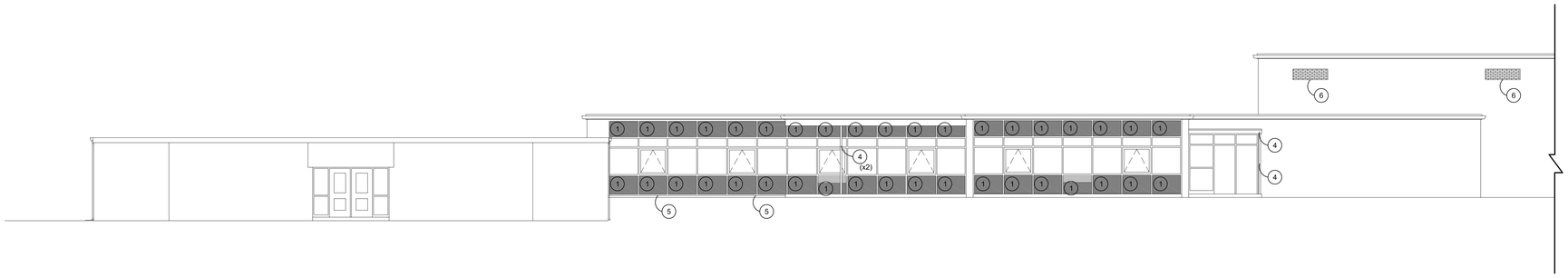

1 A4.0KB WEST ELEVATION

SCALE: 1/8" = 1'-0"

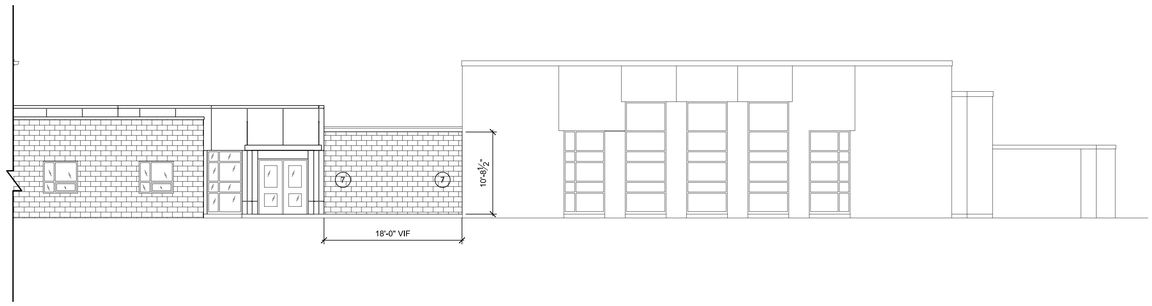

2 A4.0KB WEST ELEVATION

SCALE: 1/8" = 1'-0"

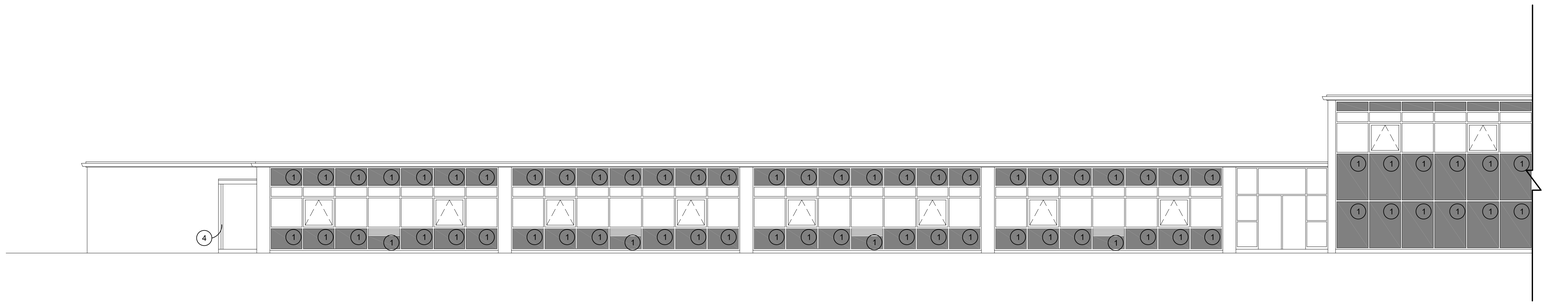

3 A4.0KB SOUTH ELEVATION

SCALE: 1/8" = 1'-0"

4 A4.0KB SOUTH ELEVATION

SCALE: 1/8" = 1'-0"

BUILDING ELEVATION - KEYNOTES:

1. EXIST METAL PANEL TO BE SANDBLASTED DOWN TO METAL FINISH AND RE-COATED W/ NEW COATING (COLOR TBD). NOT ALL LOCATIONS OF METAL PANELS ARE SHOWN ON ELEVATIONS - V.I.F. ALL SIZES AND DIMENSIONS. PROTECT EXISTING ANODIZED FRAME. REPAIR ANY DAMAGE TO EXISTING FRAMES.
2. EXISTING LETTERS AND NUMERALS TO BE REMOVED. PATCH HOLES IN EXISTING METAL SIDING
3. PROVIDE NEW 1'-0" HIGH PIN MOUNTED CAST ALUMINUM LETTERS AND NUMERALS IN CUSTOM COLOR FASTENED TO EXISTING SIDING. LOCATIONS AND WORDS TBD (35 LETTERS AND 5 NUMERALS)
4. EXISTING STEEL COLUMN/ SOFFIT PANEL TO BE SANDBLASTED DOWN TO STEEL SURFACE. REMOVE ALL RUST AT BASE, ETC AND RE-COATE WITH NEW COATING (COLOR TBD)
5. SCRAPE EXISTING CONCRETE SURFACE, PATCH ANY/ALLL HOLES FLUSH, CAULK ALL CRACKS, RE-COAT W/ NEW COATING (COLOR TBD)
6. REMOVE EXISTING LOUVER AND INFILL OPENING WITH BRICK AND BLOCK WALL TO MATCH EXISTING CONSTRUCTION. TOOTH-IN NEW CONSTRUCTION TO EXISTING MASONRY.
7. REMOVE EXISTING VENEER BRICK AND INSTALL SPLIT FACE VENEER BLOCK

LEGEND:

EXIST METAL PANEL TO BE SANDBLASTED DOWN TO METAL FINISH AND RE-COATED W/ NEW COATING (COLOR TBD). NOT ALL LOCATIONS OF METAL PANELS ARE SHOWN ON ELEVATIONS - V.I.F. ALL SIZES AND DIMENSIONS.

NOTE: ALL EXTERIOR PAINT TO BE SEMIGLOSS SHEEN REGARDLESS OF OF INDICATION ON COLOR SCHEDULE

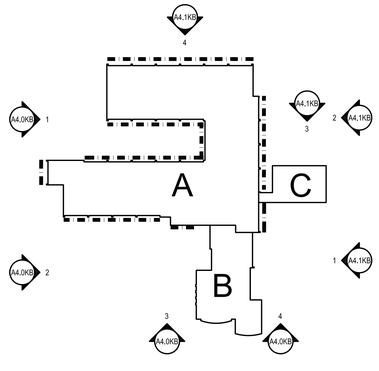

KEYPLAN

N.T.S.

EXIST METAL PANEL TO BE SANDBLASTED DOWN TO METAL FINISH AND RE-COATED W/ NEW COATING (COLOR TBD). NOT ALL LOCATIONS OF METAL PANELS ARE SHOWN ON ELEVATIONS - V.I.F. ALL SIZES AND DIMENSIONS. SEE NOTE 1.

WAKELY ASSOCIATES, INC.
ARCHITECTS

30500 VAN DYKE AVENUE
SUITE M-7
WARREN, MICHIGAN 48093
PH: 586.573.4100
FX: 586.573.0822
www.WakelyAIA.com

FARMINGTON PUBLIC SCHOOLS - 2015 BOND
2018 PROJECTS
KENBROOK & BEECHVIEW ELEMENTARY SCHOOLS

KENBROOK ELEMENTARY SCHOOL

EXTERIOR ELEVATIONS

PRELIMINARY ☐
DESIGN DEVELOPMENT ☐
CONSTRUCTION ■
FINAL RECORD ☐

DRAWN BY NJL
CHECKED BY BJS

REVISIONS

DATE: December 12, 2017

SHEET NO.

A4.0KB

JOB NO. 171712A

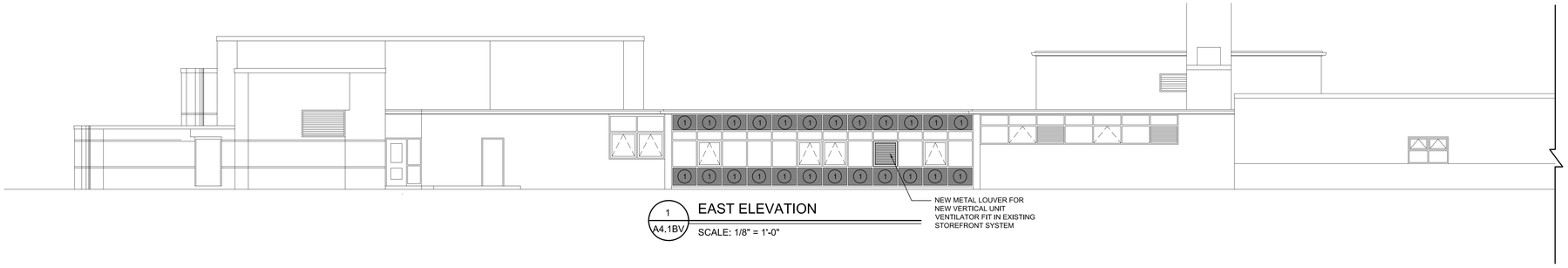

1 / A4.1BV EAST ELEVATION

SCALE: 1/8" = 1'-0"

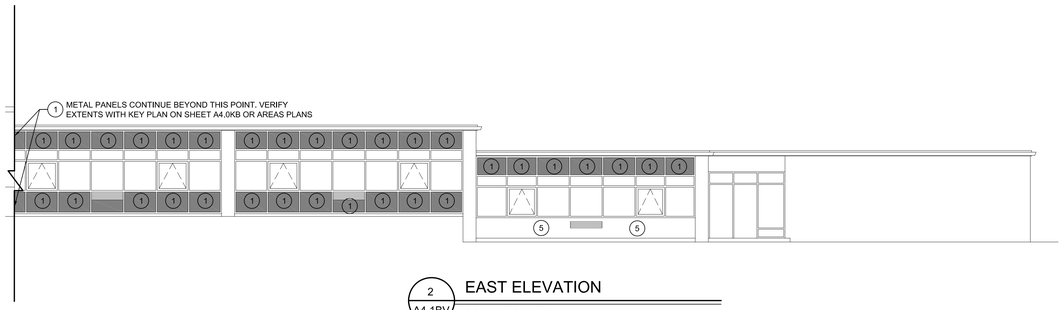

2 / A4.1BV EAST ELEVATION

SCALE: 1/8" = 1'-0"

3 / A4.0BV NORTH ELEVATION

SCALE: 1/8" = 1'-0"

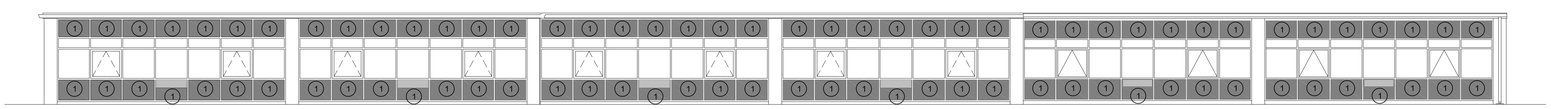

4 / A4.0BV NORTH ELEVATION

SCALE: 1/8" = 1'-0"

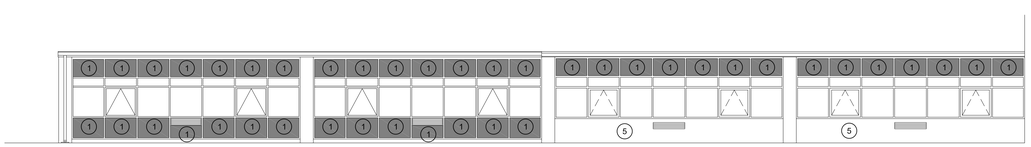

5 / A4.0BV NORTH ELEVATION

SCALE: 1/8" = 1'-0"

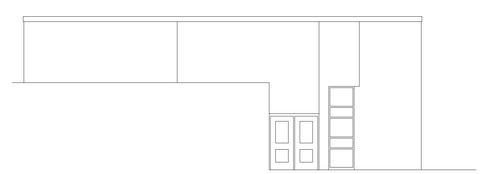

6 / A4.0BV NORTH ELEVATION

SCALE: 1/8" = 1'-0"

BUILDING ELEVATION - KEYNOTES:

1. EXIST METAL PANEL TO BE SANDBLASTED DOWN TO METAL FINISH AND RE-COATED W/ NEW COATING (COLOR TBD). NOT ALL LOCATIONS OF METAL PANELS ARE SHOWN ON ELEVATIONS - V.I.F. ALL SIZES AND DIMENSIONS. PROTECT EXISTING ANODIZED FRAME. REPAIR ANY DAMAGE TO EXISTING FRAMES.
2. EXISTING LETTERS AND NUMERALS TO BE REMOVED. PATCH HOLES IN EXISTING METAL SIDING
3. PROVIDE NEW 1'-0" HIGH PIN MOUNTED CAST ALUMINUM LETTERS AND NUMERALS IN CUSTOM COLOR FASTENED TO EXISTING SIDING. LOCATIONS AND WORDS TBD (35 LETTERS AND 5 NUMERALS)
4. EXISTING STEEL COLUMN TO BE SANDBLASTED DOWN TO STEEL SURFACE. REMOVE ALL RUST AT BASE, ETC AND RE-COATE WITH NEW COATING (COLOR TBD)
5. SCRAPE EXISTING CONCRETE SURFACE, PATCH ANY/ALLL HOLES FLUSH, CAULK ALL CRACKS, RE-COAT W/ NEW COATING (COLOR TBD)
6. TAKE DOWN EXISTING CHIMNEY AND CAP.

LEGEND:

EXIST METAL PANEL TO BE SANDBLASTED DOWN TO METAL FINISH AND RE-COATED W/ NEW COATING (COLOR TBD). NOT ALL LOCATIONS OF METAL PANELS ARE SHOWN ON ELEVATIONS - V.I.F. ALL SIZES AND DIMENSIONS.

NOTE: ALL EXTERIOR PAINT TO BE SEMIGLOSS SHEEN REGARDLESS OF OF INDICATION ON COLOR SCHEDULE

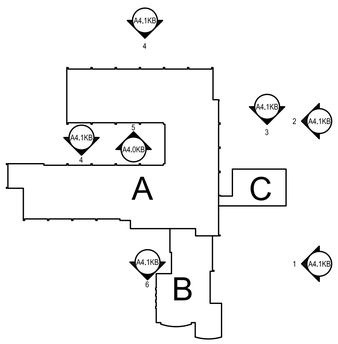

KEYPLAN

N.T.S.

WAKELY ASSOCIATES, INC.
ARCHITECTS

30500 VAN DYKE AVENUE
SUITE M-7
WARREN, MICHIGAN 48093
PH: 586.573.4100
FX: 586.573.0822
www.WakelyAIA.com

FARMINGTON PUBLIC SCHOOLS - 2015 BOND
2018 PROJECTS
KENBROOK & BEECHVIEW ELEMENTARY SCHOOLS

KENBROOK ELEMENTARY SCHOOL

EXTERIOR ELEVATIONS

PRELIMINARY ☐
DESIGN DEVELOPMENT ☐
CONSTRUCTION ■
FINAL RECORD ☐

DRAWN BY NJL
CHECKED BY BJS

REVISIONS

DATE: December 12, 2017

SHEET NO.

A4.1KB

JOB NO. 171712A

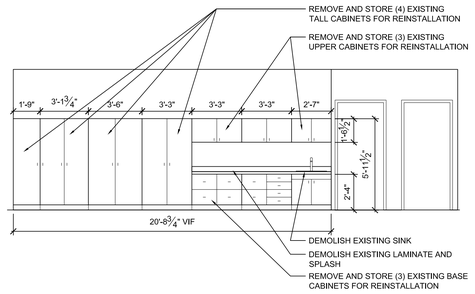

05 AD1.1KB EXIST/DEMO INTERIOR ELEVATION - A119

SCALE: 1/4" = 1'-0"

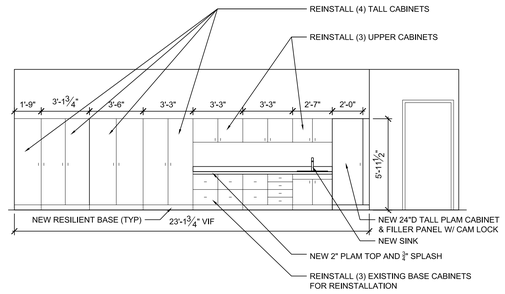

01 A1.1KB NEW INTERIOR ELEVATION - A119

SCALE: 1/4" = 1'-0"

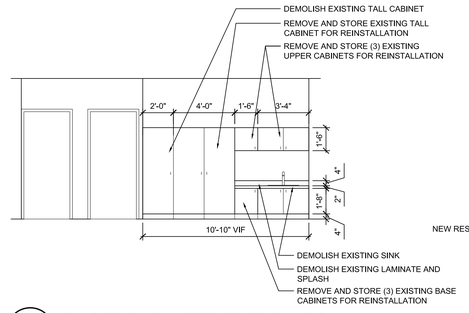

06 AD1.1KB EXIST/DEMO INTERIOR ELEVATION - A154

SCALE: 1/4" = 1'-0"

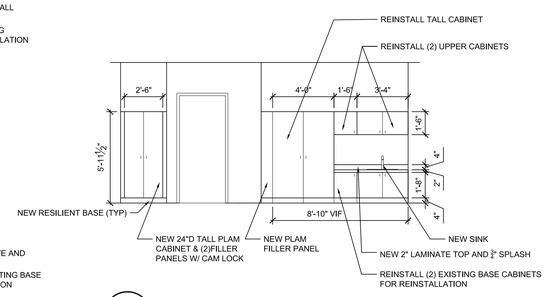

02 A1.1KB NEW INTERIOR ELEVATION - A154

SCALE: 1/4" = 1'-0"

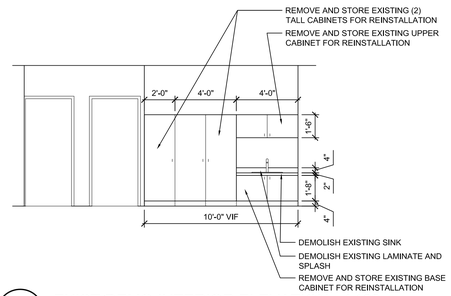

07 AD1.1KB EXIST/DEMO INTERIOR ELEVATION - A169

SCALE: 1/4" = 1'-0"

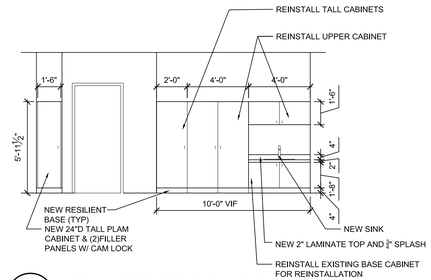

03 A1.1KB NEW INTERIOR ELEVATION - A169

SCALE: 1/4" = 1'-0"

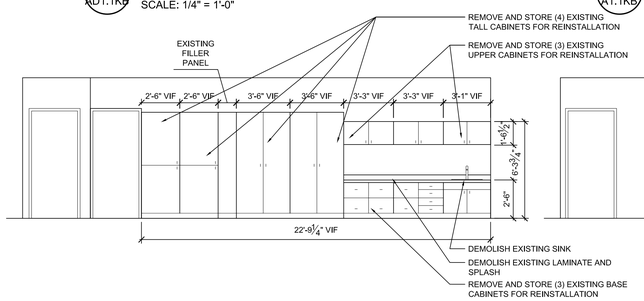

08 AD1.1KB EXISTING INTERIOR ELEVATION - A137

SCALE: 1/4" = 1'-0"

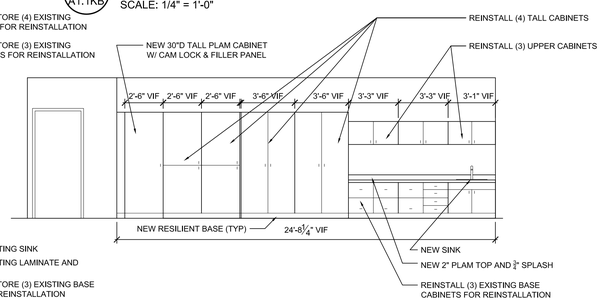

04 A1.1KB NEW INTERIOR ELEVATION - A137

SCALE: 1/4" = 1'-0"

WAKELY ASSOCIATES, INC.
ARCHITECTS

30500 VAN DYKE AVENUE
SUITE M-7
WARREN, MICHIGAN 48093
PH: 586.573.4100
FX: 586.573.0822
www.WakelyAIA.com

FARMINGTON PUBLIC SCHOOLS - 2015 BOND
2018 PROJECTS
KENBROOK & BEECHVIEW ELEMENTARY SCHOOLS

KENBROOK ELEMENTARY SCHOOL

INTERIOR ELEVATIONS

PRELIMINARY ☐
DESIGN DEVELOPMENT ☐
CONSTRUCTION ☐
FINAL RECORD ■

DRAWN BY NJL
CHECKED BY BJS

REVISIONS

DATE: December 6, 2017

SHEET NO.

A5.1K

JOB NO. 171712A

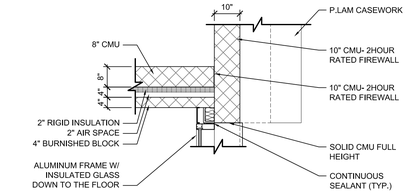

07 / A5.3K FIREWALL DETAIL

SCALE: 1/2" = 1'-0"

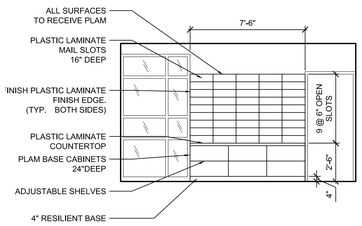

08 / A5.3K INTERIOR ELEVATION @ MAIN OFFICE

SCALE: 1/4" = 1'-0"

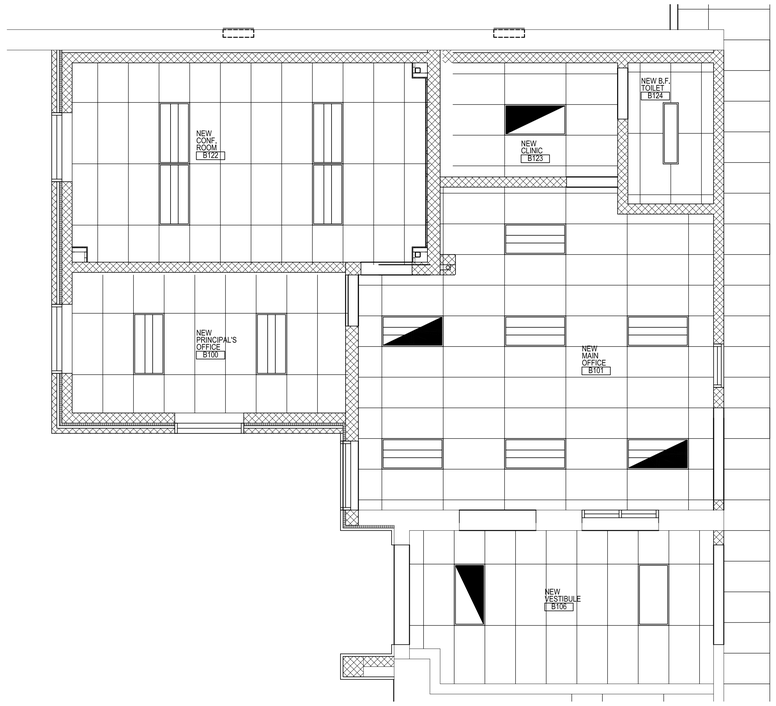

03 / A1.1K ENLARGED NEW SECURE ENTRY CEILING PLAN

SCALE: 1/4" = 1'-0"

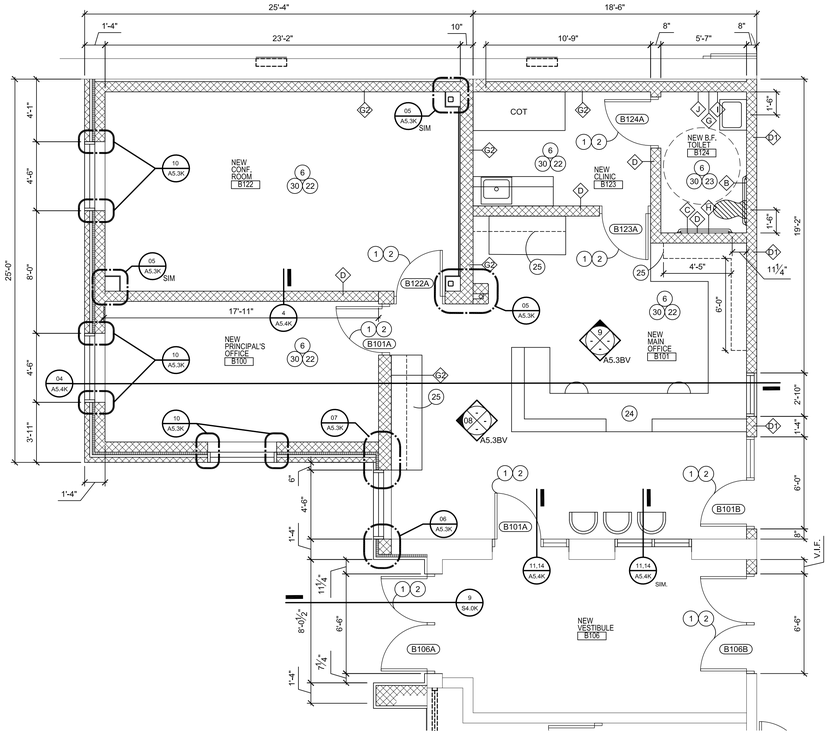

01 / A1.1K ENLARGED NEW SECURE ENTRY FLOOR PLAN

SCALE: 1/4" = 1'-0"

TOILET ACCESSORY LEGEND:

- A TOILET PARTITION
- B 36" GRAB BAR
- C 42" GRAB BAR
- D 18" VERTICAL GRAB BAR
- E 36" x 36" MIRROR
- F URINAL SCREEN
- G 24" x 36" MIRROR
- H TOILET PAPER HOLDER (BY OWNER)
- I SOAP DISPENSOR (BY OWNER)
- J PAPER TOWEL DISPENSER (BY OWNER)
- K SANITARY NAPKIN DISPOSAL
- L MARBLE THRESHOLD

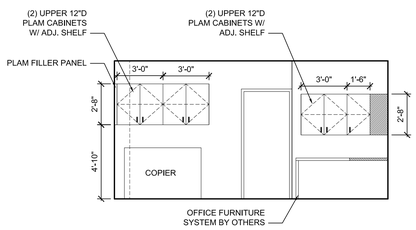

09 / A5.3K INTERIOR ELEVATION @ MAIN OFFICE

SCALE: 1/4" = 1'-0"

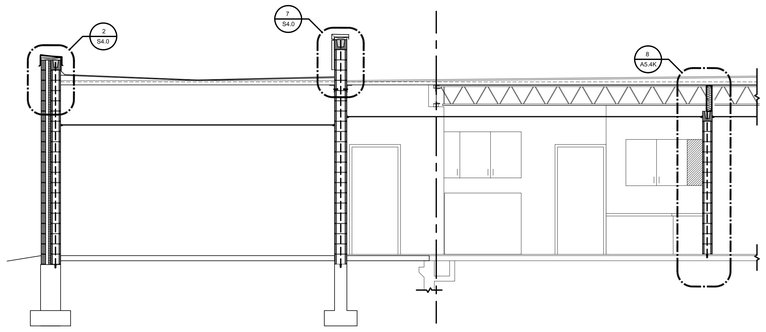

04 / A5.3K BUILDING SECTION NEW MAIN OFFICE SECTION

SCALE: 1/4" = 1'-0"

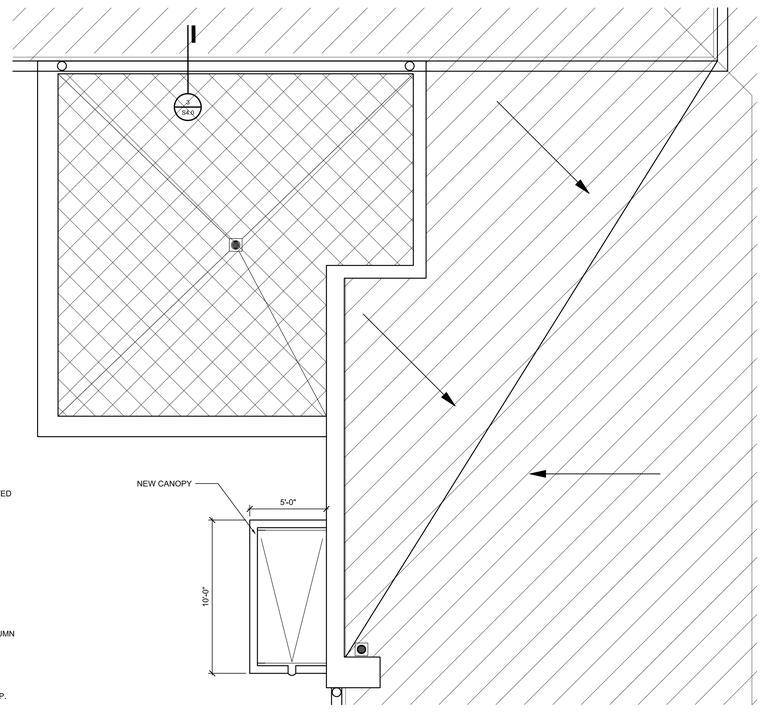

02 / A1.1K ENLARGED NEW SECURE ENTRY ROOF PLAN

SCALE: 1/4" = 1'-0"

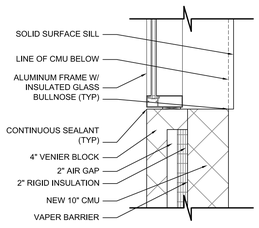

10 / A5.3K WINDOW JAMB

SCALE: 1" = 1'-0"

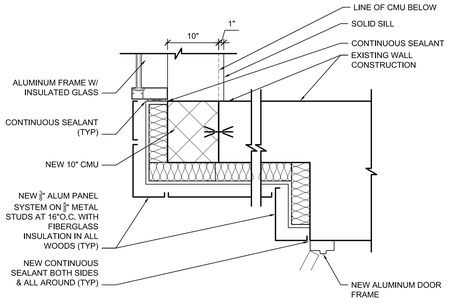

06 / A5.3K CORNER DETAIL

SCALE: 1" = 1'-0"

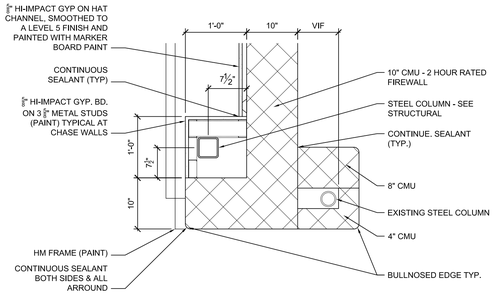

05 / A5.3K COLUMN COVER DETAIL

SCALE: 1" = 1'-0"

WA

WAKELY ASSOCIATES, INC. ARCHITECTS

30500 VAN DYKE AVENUE
SUITE M-7
WARREN, MICHIGAN 48093
PH: 586.573.4100
FX: 586.573.0822
www.WakelyAIA.com

FARMINGTON PUBLIC SCHOOLS - 2015 BOND 2018 PROJECTS KENBROOK & BEECHVIEW ELEMENTARY SCHOOLS

KENBROOK ELEMENTARY SCHOOL

INTERIOR ELEVATIONS

PRELIMINARY ☐
DESIGN DEVELOPMENT ☐
CONSTRUCTION ■
FINAL RECORD ☐

DRAWN BY NJL
CHECKED BY BJS

REVISIONS

DATE: December 12, 2017

SHEET NO.

A5.3K

JOB NO. 171712A

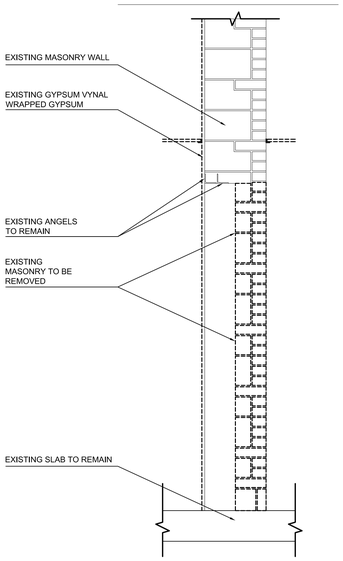

DEMO WALL SECTION @ OFFICE CORRIDOR WALLS

14 / A5.3K

SCALE: 3/4" = 1'-0"

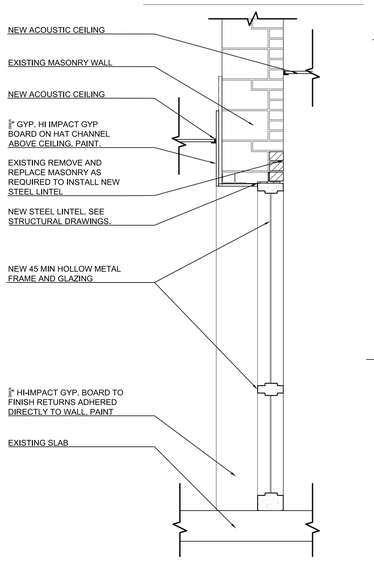

NEWWALL SECTION @ OFFICE CORRIDOR WALLS

11 / A5.3K

SCALE: 3/4" = 1'-0"

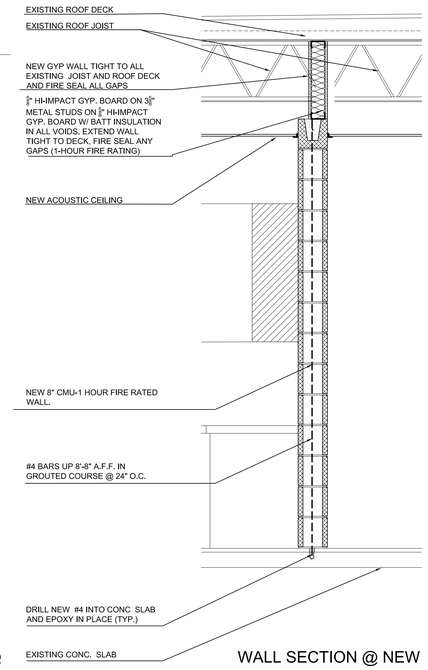

WALL SECTION @ NEW CORRIDOR WALLS

08 / A5.3K

SCALE: 3/4" = 1'-0"

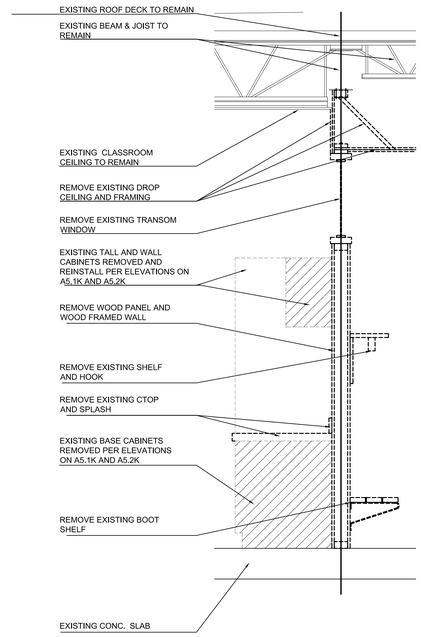

WALL SECTION @ NEW OFFICE CORRIDOR WALLS

05 / A5.3K

SCALE: 3/4" = 1'-0"

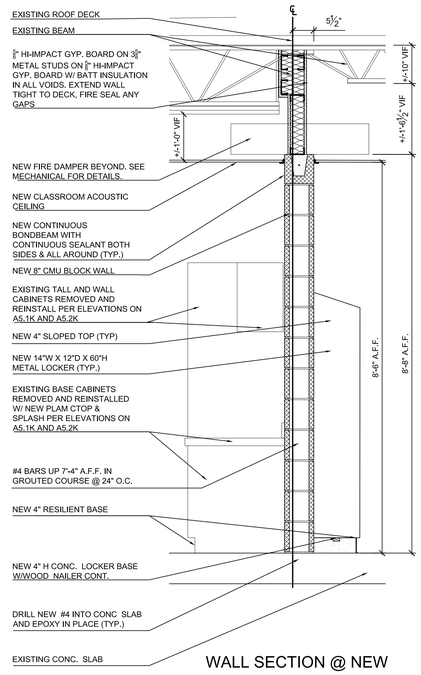

WALL SECTION @ NEW CORRIDOR WALLS

01 / A5.3K

SCALE: 3/4" = 1'-0"

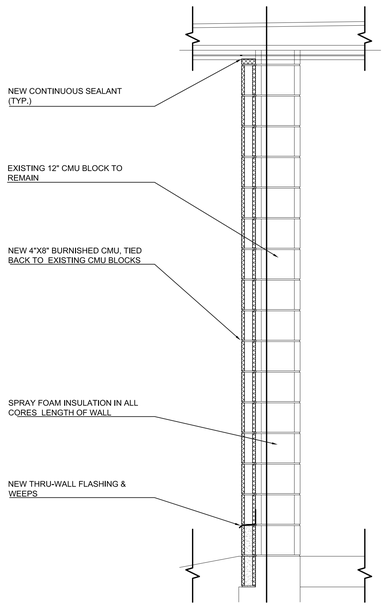

NEW WALL SECTION @ EXTERIOR WALLS

12 / A5.3K

SCALE: 3/4" = 1'-0"

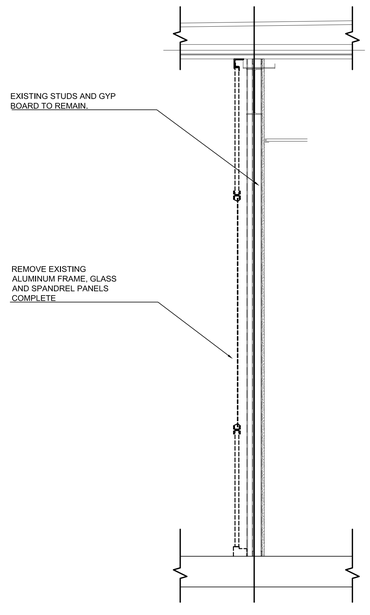

DEMO WALL SECTION @ EXTERIOR WALLS

09 / A5.3K

SCALE: 3/4" = 1'-0"

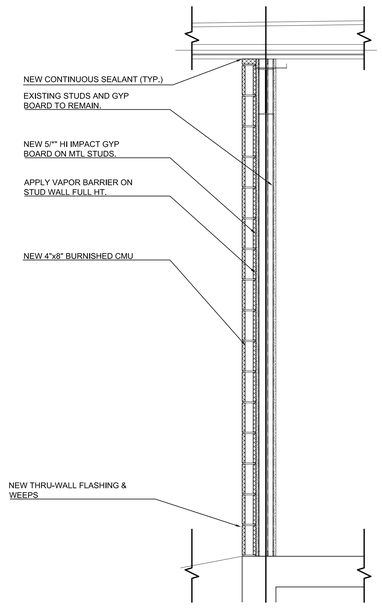

WALL SECTION @ NEW CORRIDOR WALLS

06 / A5.3K

SCALE: 3/4" = 1'-0"

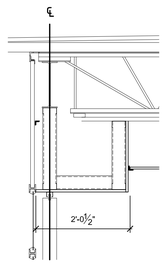

DETAIL @WINDOW SOFFIT

02 / A1.2K

SCALE: 3/4" = 1'-0"

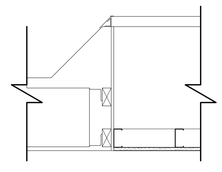

DETAIL @ INFILLED SKYLIGHT

03 / A2.1K

SCALE: 3/4" = 1'-0"

WAKELY ASSOCIATES, INC.
ARCHITECTS

30500 VAN DYKE AVENUE
SUITE M-7
WARREN, MICHIGAN 48093
PH: 586.573.4100
FX: 586.573.0822
www.WakelyAIA.com

FARMINGTON PUBLIC SCHOOLS - 2015 BOND
2018 PROJECTS
KENBROOK & BEECHVIEW ELEMENTARY SCHOOLS

KENBROOK ELEMENTARY SCHOOL

INTERIOR ELEVATIONS

PRELIMINARY ☐
DESIGN DEVELOPMENT ☐
CONSTRUCTION ☐
FINAL RECORD ■

DRAWN BY NJL
CHECKED BY BJS

REVISIONS

DATE: December 6, 2017

SHEET NO.

A5.4K

JOB NO. 171712A

DOOR SCHEDULE

DOOR OPENING			DOOR			FRAME			DETAILS						
NO.	WIDTH	HEIGHT	TYPE	MATERIAL	FINISH	TYPE	MATERIAL	FINISH	HEAD	JAMB	SILL	THRESHOLD	U.L. LABEL	HARDWARE SET	REMARKS
DOORS															
B114A	3'-0"	6'-11"	4	WD	STN	ETR	ETR	PT	-	-	-	-	20MIN	-	8,12
B115A	3'-0"	6'-11"	4	WD	STN	ETR	ETR	PT	-	-	-	-	20MIN	-	8,12
B116A	3'-0"	6'-11"	4	WD	STN	ETR	ETR	PT	-	-	-	-	20MIN	-	8,12
B116B	3'-0"	6'-11"	4	WD	STN	ETR	ETR	PT	-	-	-	-	20MIN	-	8,12
B118A	3'-0"	7'-0"	H	WD	STN	B7	HM	PT	-	-	-	-	20MIN	-	2,5,8,13,17
B119A	3'-0"	7'-0"	H	WD	STN	B7	HM	PT	-	-	-	-	20MIN	-	2,5,8,13,17
B121A	3'-0"	7'-0"	H	WD	STN	B7	HM	PT	-	-	-	-	20MIN	-	2,5,8,13,17
B122A	3'-0"	7'-0"	H	WD	STN	B7	HM	PT	-	-	-	-	20MIN	-	2,5,8,13,17
B123A	3'-0"	7'-0"	F	WD	STN	B7	HM	PT	-	-	-	-	-	-	2,5,13
B124A	3'-0"	7'-0"	H	WD	STN	B7	HM	PT	-	-	-	-	20MIN	-	2,5,8,13,17
B129A	3'-0"	7'-0"	F	WD	STN	B7	HM	PT	-	-	-	-	-	-	2,5,13
-	-	-	-	-	-	-	-	-	-	-	-	-	-	-	-
-	-	-	-	-	-	-	-	-	-	-	-	-	-	-	-
-	-	-	-	-	-	-	-	-	-	-	-	-	-	-	-
-	-	-	-	-	-	-	-	-	-	-	-	-	-	-	-
C100A	(2)3'-0"	7'-0"	E	FRP	PFN	A9	ALUM	PFN	-	-	-	AL	-	-	5,13
C101A	(2)3'-0"	7'-0"	G	FRP	PFN	A9	HM	PT	-	-	-	-	-	-	5,13
C102A	3'-0"	7'-0"	H	WD	STN	B7	HM	PT	-	-	-	-	20MIN	-	2,5,8,13,17
C103A	3'-0"	7'-0"	K	WD	STN	ETR	ETR	PT	-	-	-	-	-	-	12
C104A	3'-0"	7'-0"	H	WD	STN	B7	HM	PFN	-	-	-	-	20MIN	-	2,5,8,13,17
C105A	3'-0"	7'-0"	H	WD	STN	ETR	ETR	PT	-	-	-	-	20MIN	-	-

REMARKS: (NOTE: NOT ALL REMARKS LISTED ARE USED)

1. EXISTING WOOD DOOR AND H.M. FRAME TO REMAIN - PREP DOOR AS NEEDED TO ACCEPT NEW HARDWARE
2. REMOVE & REPLACE EXIST DOOR AND FRAME - SEE SCHEDULE
3. PROVIDE ADA AUTOMATIC OPENER @ 1 LEAF
4. PROVIDE KEYED REMOVABLE MULLION ON CENTER MULLION
5. VERIFY MASONRY OPENING IN FIELD PRIOR TO FABRICATION OF NEW DOOR & FRAME.
6. PROVIDE $\frac{1}{4}$" LAM. GLASS IN ALL DOOR AND FRAME OPENINGS.
7. PROVIDE 1" LAM. INSULATED GLASS IN DOOR AND FRAME OPENINGS
8. PROVIDE FIRE RATED GLASS IN DOOR AND FRAME OPENINGS. SEE SPEC.
9. DISCONNECT ALARM SYSTEM TO REPLACE DOOR/ FRAME AND RECONNECT AS REQUIRED WHEN NEW DOOR/ FRAME IS IN PLACE.
10. DOORS AND FRAME TO REMAIN. CHANGE HARDWARE AS SPEC'D. MODIFY DOORS & FRAMES AS REQ'D FOR NEW HARDWARE REQUIREMENTS.
11. PROVIDE 20 MIN RATED GLASS IN DOOR AND 45 MIN RATED GLASS IN FRAME / TRANSOM PANEL.
12. REMOVE EXIST. DOOR AND HARDWARE AND REPLACE WITH NEW DOOR AND HARDWARE. VERIFY FRAME OPENING/DOOR SIZE IN FIELD PRIOR TO ORDERING NEW DOOR. FRAME TO BE PAINTED.
13. NEW DOOR AND FRAME.
14. SEE ELEVATIONS FOR FRAME TYPE.
15. REMOVE / REPLACE MARBLE THRESHOLD WITH NEW.
16. PROVIDE SOUND SEALS ON ALL SIDES OF NEW WOOD DOOR.
17. DEMOLITION BY OTHERS
18. PROVIDE NEW LOCKING HARDWARE TO CREATE SECURE ENTRY-
19. PRP NEW FRAME FOR STRIKE RELEASE HARDWARE.
20. PROVIDE 1" LAMINATE GLASS IN ALL DOOR OPENINGS.
21. EXPAND EXISTING DOOR OPENING TO ACCOMMODATE NEW DOOR DIMENSIONS. PROVIDE NEW MASONRY LINTEL AND TOOTH-IN NEW BULL-NOSED BLOCK AT NEW JAMBS.

ABBREVIATIONS

AL	ALUMINUM	PTD	PAINTED
ETR	EXISTING TO REMAIN	WD	WOOD
FRP	FIBERGLASS REINFORCED POLYESTER	STL	STEEL
HM	HOLLOW METAL	STN	STAINED
MAR	SYNTHETIC MARBLE THRESHOLD	TG	TEMPERED GLASS
PFN	PRE FINISHED BY MANUFACTURER	GL	GLASS

NOTES: (APPLIES TO ALL DOORS)

A. VERIFY ALL DOOR OPENINGS AND MASONRY FRAME OPENINGS IN FIELD PRIOR TO FABRICATION OF NEW.
B. ALL NEW FRP DOORS AND ALUMINUM FRAMES TO RECEIVE MANUFACTURER FINISH.REFER TO SPECIFICATIONS FOR HARDWARE SETS.
C. ALL NEW WOOD DOORS CALLING FOR STAIN TO BE FACTORY STAINED AND SEALED ON ALL SURFACES AND SIDES AND ENDS. DO NOT LEAVE RAW WOOD ON ENDS EXPOSED.

FRAME ELEVATIONS:

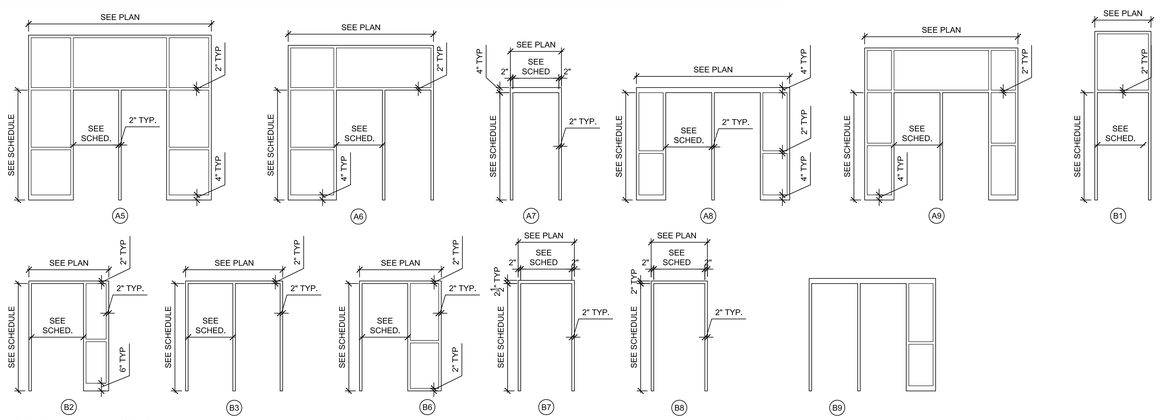

DOOR ELEVATIONS:

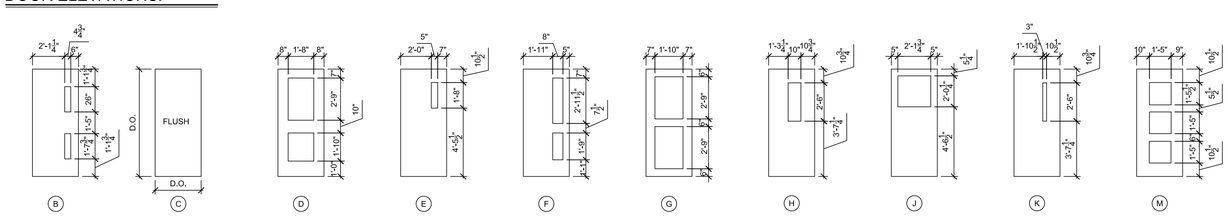

DOOR SCHEDULE

DOOR OPENING			DOOR			FRAME			DETAILS						
NO.	WIDTH	HEIGHT	TYPE	MATERIAL	FINISH	TYPE	MATERIAL	FINISH	HEAD	JAMB	SILL	THRESHOLD	U.L. LABEL	HARDWARE SET	REMARKS
DOORS															
A101A	3'-0"	6'-11"	4	WD	STN	ETR	ETR	PT	-	-	-	-	20MIN	-	8,12
A102A	3'-0"	6'-11"	4	WD	STN	ETR	ETR	PT	-	-	-	-	20MIN	-	8,12
A103A	3'-0"	6'-11"	4	WD	STN	ETR	ETR	PT	-	-	-	-	20MIN	-	8,12
A104A	3'-0"	6'-11"	4	WD	STN	ETR	ETR	PT	-	-	-	-	20MIN	-	8,12
A106A	3'-0"	7'-0"	H	WD	STN	B7	HM	PT	-	-	-	-	20MIN	-	2,5,8,13,17
A107A	3'-0"	7'-0"	H	WD	STN	B7	HM	PT	-	-	-	-	20MIN	-	2,5,8,13,17
A110A	3'-0"	7'-0"	H	WD	STN	B7	HM	PT	-	-	-	-	20MIN	-	2,5,8,13,17
A111A	3'-0"	7'-0"	H	WD	STN	B7	HM	PT	-	-	-	-	20MIN	-	2,5,8,13,17
A114A	3'-0"	7'-0"	F	WD	STN	B7	HM	PT	-	-	-	-	-	-	2,5,13
A115A	3'-0"	7'-0"	H	WD	STN	B7	HM	PT	-	-	-	-	20MIN	-	2,5,8,13,17
A116A	3'-0"	7'-0"	F	WD	STN	B7	HM	PT	-	-	-	-	-	-	2,5,13
A119A	3'-0"	7'-0"	H	WD	STN	B7	HM	PT	-	-	-	-	20MIN	-	2,5,8,13,17
A122A	8'-4"	6'-11"	F	WD	STN	ETR	ETR	PT	-	-	-	-	60MIN	-	12
A123A	3'-0"	6'-11"	ETR	ETR	PT	ETR	ETR	PT	-	-	-	-	-	-	-
A123B	8'-4"	6'-11"	ETR	ETR	PT	ETR	ETR	PT	-	-	-	-	-	-	-
A125A	(2)3'-0"	7'-0"	E	FRP	PFN	A9	ALUM	PFN	-	-	-	AL	-	-	5,13
A125B	(2)3'-0"	7'-0"	G	FRP	PFN	A9	HM	PT	-	-	-	-	-	-	5,13
A127A	3'-0"	7'-0"	H	WD	STN	B7	HM	PT	-	-	-	-	20MIN	-	2,5,8,13,17
A128A	3'-0"	7'-0"	K	WD	STN	ETR	ETR	PT	-	-	-	-	-	-	12
A129A	3'-0"	7'-0"	H	WD	STN	B7	HM	PFN	-	-	-	-	20MIN	-	2,5,8,13,17
A130A	3'-0"	7'-0"	H	WD	STN	ETR	ETR	PT	-	-	-	-	20MIN	-	-
A130B	3'-0"	7'-0"	H	WD	STN	ETR	ETR	PT	-	-	-	-	20MIN	-	-
A132B	2'-11$\frac{1}{2}$"	6'-11"	H	WD	-	B5	ALUM	-	-	-	-	-	-	-	-
A133A	3'-0"	7'-0"	H	WD	PFN	B7	ALUM	PFN	-	-	-	-	-	-	-
A136A	(2)3'-0"	7'-0"	G	FRP	PFN	A8	ALUM	PFN	-	-	-	AL	-	-	5,13
A137A	3'-0"	7'-0"	H	WD	STN	B7	HM	PT	-	-	-	-	-	-	2,5,8,13,17
A139B	3'-3"	7'-0"	ETR	ETR	PT	ETR	ETR	PT	-	-	-	-	-	-	-
A140A	3'-0"	7'-0"	B	WD	STN	B7	HM	PT	-	-	-	MAR	-	-	2,12,13,15
A141A	3'-0"	7'-0"	F	WD	STN	B7	HM	PT	-	-	-	-	-	-	2,12,13
A141B	3'-0"	7'-0"	F	WD	STN	B7	HM	PT	-	-	-	-	-	-	2,12,13
A142A	3'-0"	7'-0"	F	WD	STN	B3	HM	PT	-	-	-	-	-	-	2,12,13
A143A	(2)3'-0"	7'-0"	H	WD	STN	B3	HM	PT	-	-	-	-	-	-	2,8,12,13
A143B	(2)3'-0"	7'-0"	H	WD	STN	B9	HM	PT	-	-	-	-	-	-	2,8,12,13
A143C	(2)3'-0"	7'-0"	H	WD	STN	B9	HM	PT	-	-	-	-	-	-	2,8,12,13
A144A	3'-0"	7'-0"	F	WD	STN	B7	HM	PT	-	-	-	MAR	-	-	2,12,13,15
A145A	(2)3'-0"	7'-0"	H	WD	STN	B7	HM	PT	-	-	-	-	-	-	2,8,12,13
A146A	3'-0"	7'-0"	H	WD	STN	B7	HM	PT	-	-	-	-	20MIN	-	2,8,12,13
A147A	3'-0"	7'-0"	B	WD	STN	A9	HM	PT	-	-	-	AL	-	-	2,7,9,12,13
A149A	3'-0"	7'-0"	H	WD	STN	B7	HM	PT	-	-	-	-	-	-	2,8,12,13
A150A	3'-0"	7'-0"	H	WD	STN	B7	HM	PT	-	-	-	-	20MIN	-	2,8,12,13
A151A	3'-0"	7'-0"	H	WD	STN	B7	HM	PT	-	-	-	MAR	-	-	2,13,15,21
A154A	3'-0"	7'-0"	H	WD	STN	B7	HM	PT	-	-	-	-	20MIN	-	2,8,12,13
A155A	3'-0"	7'-0"	H	WD	STN	B7	HM	PT	-	-	-	MAR	-	-	2,13,15,21
A155B	2'-2"	7'-0"	H	WD	STN	B7	HM	PT	-	-	-	-	-	-	2,13,21
A157A	3'-0"	7'-0"	H	WD	STN	B7	HM	PT	-	-	-	-	20MIN	-	2,8,12,13
A158A	3'-0"	7'-0"	H	WD	STN	B7	HM	PT	-	-	-	MAR	-	-	2,13,15,21
A158B	2'-6"	7'-0"	H	WD	STN	B7	HM	PT	-	-	-	-	-	-	2,12,13
A161A	3'-0"	7'-0"	H	WD	STN	B7	HM	PT	-	-	-	MAR	-	-	2,13,15,21
A161B	2'-6"	7'-0"	H	WD	STN	B7	HM	PT	-	-	-	MAR	-	-	2,12,13,15
A162A	3'-0"	7'-0"	H	WD	STN	B7	HM	PT	-	-	-	-	20MIN	-	2,8,12,13
A163A	3'-0"	7'-0"	H	WD	STN	B7	HM	PT	-	-	-	-	20MIN	-	2,8,12,13
A166A	2'-6"	7'-0"	H	WD	STN	B7	HM	PT	-	-	-	-	-	-	2,12,13
A166B	2'-6"	7'-0"	H	WD	STN	B7	HM	PT	-	-	-	-	-	-	2,12,13
A167A	3'-0"	7'-0"	H	WD	STN	B7	HM	PT	-	-	-	-	-	-	2,13,21
A167B	3'-0"	7'-0"	H	WD	STN	B7	HM	PT	-	-	-	-	-	-	2,13,21
A168A	3'-0"	7'-0"	H	WD	STN	B7	HM	PT	-	-	-	-	20MIN	-	2,8,12,13
A168B	3'-0"	7'-0"	H	WD	STN	B7	HM	PT	-	-	-	-	-	-	2,8,12,13
A169A	3'-0"	7'-0"	H	WD	STN	B7	HM	PT	-	-	-	-	20MIN	-	2,8,12,13
A172A	3'-0"	7'-0"	H	WD	STN	B7	HM	PT	-	-	-	MAR	-	-	2,12,13,15
A173A	3'-0"	7'-0"	H	WD	STN	B7	HM	PT	-	-	-	MAR	-	-	2,12,13,15
A174A	3'-0"	7'-0"	H	WD	STN	B7	HM	PT	-	-	-	-	20MIN	-	2,8,12,13
A174B	3'-0"	7'-0"	ETR	ETR	PT	ETR	ETR	PT	-	-	-	-	-	-	-
A174C	3'-0"	7'-0"	ETR	ETR	PT	ETR	ETR	PT	-	-	-	-	-	-	-
A176A	3'-0"	7'-0"	F	WD	STN	B7	HM	PT	-	-	-	-	-	-	2,12,13
A177A	3'-0"	7'-0"	F	FRP	PFN	A8	AL	PFN	-	-	-	AL	-	-	2,8,9,12,13
A177B	3'-0"	7'-0"	F	WD	STN	A8	HM	PT	-	-	-	-	-	-	2,8,12,13
A178A	3'-0"	7'-0"	F	WD	STN	B7	HM	PT	-	-	-	-	-	-	2,12,13
-	-	-	-	-	-	-	-	-	-	-	-	-	-	-	-
-	-	-	-	-	-	-	-	-	-	-	-	-	-	-	-
-	-	-	-	-	-	-	-	-	-	-	-	-	-	-	-
B100A	3'-0"	7'-0"	H	WD	STN	A8	HM	PT	-	-	-	-	-	-	13
B101A	3'-0"	6'-11"	G	WD	STN	B6	HM	PT	-	-	-	-	-	-	13
B101B	3'-0"	7'-0"	G	WD	STN	B6	HM	PT	-	-	-	-	-	-	13
B102A	3'-0"	7'-0"	H	WD	STN	B6	HM	PT	-	-	-	-	-	-	13
B103B	3'-0"	7'-0"	H	WD	STN	B7	HM	PT	-	-	-	-	-	-	2,13
B104B	3'-0"	7'-0"	H	WD	STN	B7	HM	PT	-	-	-	-	-	-	2,13
B105A	3'-0"	7'-0"	H	WD	STN	B7	HM	PT	-	-	-	-	-	-	2,13
B106A	3'-0"	7'-0"	H	WD	STN	B6	HM	PT	-	-	-	-	-	-	13
B106B	3'-0"	7'-0"	H	WD	STN	B6	HM	PT	-	-	-	-	-	-	13
B108A	3'-0"	7'-0"	H	WD	STN	ETR	ETR	PT	-	-	-	-	-	-	13
B109A	3'-0"	7'-0"	F	WD	STN	ETR	ETR	PT	-	-	-	-	-	-	12
B110A	(2)3'-0"	7'-0"	F	WD	STN	ETR	ETR	PT	-	-	-	-	-	-	12
B110B	(2)3'-0"	7'-0"	F	WD	STN	ETR	ETR	PT	-	-	-	-	-	-	12
B111A	3'-0"	7'-0"	F	WD	STN	ETR	ETR	PT	-	-	-	-	-	-	12
B113B	(2)3'-0"	7'-0"	F	WD	STN	ETR	ETR	PT	-	-	-	-	-	-	12

WA

WAKELY ASSOCIATES, INC.
ARCHITECTS

30500 VAN DYKE AVENUE
SUITE M-7
WARREN, MICHIGAN 48093
PH: 586.573.4100
FX: 586.573.0822
www.WakelyAIA.com

FARMINGTON PUBLIC SCHOOLS - 2015 BOND
2018 PROJECTS
KENBROOK & BEECHVIEW ELEMENTARY SCHOOLS

KENBROOK ELEMENTARY SCHOOL

DOOR SCHEDULE & DETAILS

PRELIMINARY ☐
DESIGN DEVELOPMENT ☐
CONSTRUCTION ☐
FINAL RECORD ■

DRAWN BY NJL
CHECKED BY BJS

REVISIONS
50% REVIEW 10/13/17

DATE: December 6, 2017
SHEET NO.

A7.1KB

JOB NO. 171712A

ROOM FINISH SCHEDULE ABBREVIATIONS:

ACT	ACOUSTICAL CEILING TILE IN METAL GRID	PT	PAINT
BR	BRICK	RB	4" RESILIENT COVE BASE
CMU	CONCRETE MASONRY UNIT	RTR	RUBBER TREADS AND RISERS
CPT	CARPET	SC	SEALED CONCRETE
EPT	EPOXY PAINT	TEC	2'-0" x 2'-0" TECTUM IN GRID SYSTEM
ETR	EXISTING TO REMAIN	LVT	LUXURY VINYL TILE FLOOR
EXP	EXPOSED CONSTRUCTION	VACT	VINYL FACED ACT
GB	GYPSUM BOARD	VB	VENTED BASE
PCT	PORCELAIN CERAMIC TILE	WC	WALK-OFF CARPET
4PCT	4" PORCELAIN CERAMIC TILE COVE BASE	WD	WOOD
		AF	ACCESS FLOORING

ROOM FINISH SCHEDULE REMARKS:

1. PROVIDE MARKER BD. PAINT ON WALLS - FULL HEIGHT AND WIDTH.
2. NEW CEILING TO BE PLACED AT SAME HEIGHT AS EXISTING (VIF).
3. SEE FLOOR PLANS FOR EXTENT OF NEW FLOORING & PATTERNS.
4. MULTIPLE WALL PAINT COLORS & PATTERNS WILL BE USED IN THIS ROOM.
5. MULTIPLE COLORS WILL BE USED ON EXPOSED ROOF DECK, FRAMING, DUCTWORK, ETC.
6. SEE ELEVATIONS AND NOTES FOR HEIGHT OF WALL TILE. PAINT CMU WALL ABOVE TILE (VERIFY EACH ROOM DIMENSION IN FIELD).
7. SEE ELEVATIONS AND DETAILS FOR SOFFITS / WALL MATERIALS TO BE PAINTED.
8. REMOVE WALL COVERING, SKIM COAT WALLS, SAND AND PREP FOR NEW PAINT AS REQUIRED.
9. PROVIDE HOLD DOWN CLIPS IN ACOUSTIC CEILING TILE SYSTEM.
10. PROVIDE GYM FLOOR STRIPING AS DETAILED ON ENLARGED PLANS.

ROOM FINISH SCHEDULE GENERAL NOTES (APPLIES TO ALL ROOMS):

1. PAINT ALL EXPOSED ITEMS IN ROOMS: DOOR FRAMES, WINDOW FRAMES, DUCTS, PIPES, CONDUITS, ROOF FRAMING, ROOF DECK, ETC.
2. SEE ELEVATIONS & DETAILS FOR GYP BD SOFFIT HEIGHTS & SIZES.
3. SEE ELEVATIONS & DETAILS FOR WALL TILE HEIGHTS & LOCATIONS
4. SEE PLANS FOR FLOOR PATTERNS AND WALK-OFF CARPET LOCATIONS
5. PROVIDE VINYL TRANSITION STRIPS AT DISSIMILAR FLOOR FINISHES - CARPET / TILE, CARPET / CONCRETE, ETC.
6. PAINT NEW WALL CONSTRUCTION TO MATCH EXISTING IN ROOM (VIF)
7. PROVIDE STAINLESS STEEL SCHLUTER TRANSITIONS AT ALL HARD TILE / CARPET LOCATIONS.
8. MODIFY EXISTING LAY-IN CEILINGS AS REQUIRED TO ACCOMMODATE NEW WALL PLACEMENT.
9. REMOVE / REINSTALL EXISTING LAY-IN CEILING SYSTEMS AS REQUIRED FOR OVERHEAD PIPING, DUCT WORK, ETC (VIF).
10. VERIFY WITH EACH SCHOOL PRINCIPAL **BEFORE PAINTING OVER** TOP OF EXISTING PAINTED MURALS IN CORRIDORS AND CLASSROOMS.
11. ALL TOILET ROOMS CALLING FOR PAINT TO BE EPOXY PAINT (WALLS & CEILINGS).

ROOM FINISH SCHEDULE

NO.	ROOM NAME	FLOOR	BASE	WALLS	CEILING MATERIAL	CEILING HGT.	REMARKS
B105	EXISTING CLOSET	-	-	-	-	-	-
B106	NEW VESTIBULE	WC	RB	PT	ACT	-	-
B107	EXISTING VAULT	CPT	RB	PT	ETR/PT	-	-
B108	EXISTING B.F. TOILET	CPT	RB	PT	-	-	-
B109	EXISTING CLOSET	CPT	ETR	ETR	-	-	-
B110	EXISTING VESTIBULE	LVT	RB	PT	ACT/PAD	-	2
B111	EXISTING STORAGE	ETR	ETR	ETR	ETR	-	-
B112	EXISTING KITCHEN	ETR	ETR	PT	ETR	-	-
B113	EXISTING CAFETERIA	LVT	RB	PT	ACT/PAD	-	2,3,4
B114	EXISTING STORAGE	ETR	ETR	ETR	ETR	-	-
B115	EXISTING TOILET	PCT	4PCT	EPT	ETR/EPT	+/-8-0"(VIF)	2
B116	EXISTING CORRIDOR	LVT	RB	PT	ETR	-	3,4
B117	EXISTING PERFORMANCE AREA	LVT	RB	PT	PT	-	3,4
B118	EXISTING STORAGE	ETR	ETR	ETR	ETR	-	-
B119	EXISTING MECHANICAL	ETR	ETR	ETR	ETR	-	-
B121	EXISTING OFFICE	CPT	RB	PT	ACT	-	-
B122	CONFERENCE ROOM	CPT	RB	PT	ACT	8'-6"	-
B123	NEW CLINIC	LVT	RB	EPT	ACT	8'-0"	-
B124	NEW B.F. TOILET	PCT	4PCT	EPT	PT	8'-6"	-
B129	EXISTING STORAGE	CPT	RB	PT	ACT/PAD	-	2
C100	EXISTING OFFICE	CPT	RB	PT	ACT/PAD	7'-11"	2
C101	EXISTING OFFICE	CPT	RB	ETR	ACT/PAD	7'-11"	2
C102	EXISTING MEDIA CENTER	CPT	RB	PT	ACT/PAD	9'-1"/7'-10"	2
C103	EXISTING OFFICE	CPT	RB	ETR	ETR	7'-11"	-
C104	EXISTING PERFORMANCE AREA	CPT	RB	PT	ACT/PAD	7'-11"	2
C105	EXISTING OFFICE	ETR	ETR	ETR	ETR	7'-11"	2
-	-	-	-	-	-	-	-
-	-	-	-	-	-	-	-
-	-	-	-	-	-	-	-
-	-	-	-	-	-	-	-

ROOM FINISH SCHEDULE

NO.	ROOM NAME	FLOOR	BASE	WALLS	CEILING MATERIAL	CEILING HGT.	REMARKS
A100	-	-	-	-	-	-	-
A101	EXISTING LGI	LVT	RB	PT	-	8'-3"	-
A102	EXISTING CLASSROOM	LVT	RB	PT	-	8'-2"	-
A103	EXISTING LGI	LVT	RB	PT	-	8'-3"	-
A104	EXISTING CLASSROOM	LVT	RB	PT	-	8'-2"	-
A105	EXISTING CORRIDOR	LVT	RB	PT	ACT	8'-6"	3,4
A106	EXISTING CLASSROOM	LVT	RB	PT	ACT	8'-6"	-
A107	EXISTING CLASSROOM	LVT	RB	PT	ACT	8'-6"	-
-	-	-	-	-	-	-	-
-	-	-	-	-	-	-	-
A110	EXISTING CLASSROOM	LVT	RB	PT	ACT	8'-6"	-
A111	EXISTING CLASSROOM	LVT	RB	PT	ACT	8'-6"	-
-	-	-	-	-	-	-	-
-	-	-	-	-	-	-	-
A114	EXISTING BOYS TOILET	PCT	4PCT	PCT/EPT	GYP	9'-8"	2,6
A115	EXISTING CLASSROOM	LVT	RB	PT	ACT	8'-6"	-
A116	EXISTING GIRLS TOILET	PCT	4PCT	PCT/EPT	GYP	9'-4"	2,6
-	-	-	-	-	-	-	-
-	-	-	-	-	-	-	-
A119	EXISTING CLASSROOM	LVT	RB	PT	ACT	8'-6"	-
A120	EXISTING CORRIDOR	LVT	RB	PT	ACT	8'-6"	3,4
-	-	-	-	-	-	-	-
A122	EXISTING CUSTODIAL CLOSET	ETR	ETR	ETR	ETR	-	-
A123	EXISTING STORAGE	ETR	ETR	ETR	ETR	-	-
A124	EXISTING STORAGE	ETR	ETR	ETR	ETR	-	-
A125	EXISTING VESTIBULE	WC	RB	PT	ACT	8'-5"	-
-	-	-	-	-	-	-	-
A127	EXISTING CLASSROOM	LVT	RB	PT	ACT	8'-6"	-
A128	EXISTING KILN	ETR	ETR	ETR	ETR	-	-
A129	EXISTING CLASSROOM	LVT	RB	PT	ACT	8'-2"	-
A130	EXISTING ART ROOM	ETR	ETR	PT	-	8'-0"	-
A131	EXISTING CLOSET	-	-	-	-	-	-
A132	EXISTING OFFICE	CPT	RB	PT	ETR	8'-0"	-
A133	EXISTING MUSIC	CPT	RB	PT	ACT	8'-6"	-
-	-	-	-	-	-	-	-
A135	EXISTING CLOSET	-	-	-	-	-	-
A136	EXISTING CORRIDOR	LVT	RB	PT	ACT	8'-0"	3,4
A137	EXISTING STAFF ROOM	LVT	RB	PT	ACT	8'-6"	-
A138	EXISTING CORRIDOR	LVT	RB	PT	ACT	8'-6"	3,4
A139	EXISTING BOILER ROOM	ETR	ETR	ETR	ETR	-	-
A140	EXISTING GIRLS TOILET	PCT	4PCT	PCT/EPT	GYP/EPT	9'-9"	2,6
A141	EXISTING STORAGE	ETR	ETR	ETR	ETR	-	-
A142	EXISTING CUSTODIAL CLOSET	-	-	-	-	-	-
A143	EXISTING GYMNASIUM	LVT	RB	PT	ETR/PT	19'-9"	4,5,10
A144	EXISTING BOYS TOILET	PCT	4PCT	PCT/EPT	GYP/EPT	9'-6"	2,6
A145	EXISTING CORRIDOR	LVT	RB	PT	ACT	8'-6"	3,4
A146	EXISTING CLASSROOM	LVT	RB	PT	ACT	8'-6"	-
A147	EXISTING VESTIBULE	WC	RB	PT	ACT	8'-8"	4
A148	EXISTING CLOSET	-	-	-	-	-	-
A149	EXISTING CLASSROOM	LVT	RB	PT	ACT	8'-6"	-
A150	EXISTING CLASSROOM	LVT	RB	PT	ACT	8-6"	-
A151	EXISTING TOILET	PCT	4PCT	EPT	GYP/EPT	8'-3"	2
-	-	-	-	-	-	-	-
-	-	-	-	-	-	-	-
A154	EXISTING CLASSROOM	LVT	RB	PT	ACT	8'-6"	-
A155A	NEW TOILET	PCT	4PCT	EPT	GYP/EPT	8'-0"	2
A155B	NEW STORAGE	LVT	RB	PT	GYP/PT	8'-0"	2
A156	EXISTING TOILET	PCT	4PCT	EPT	GYP/PT	8'-3"	2
A157	EXISTING CLASSROOM	LVT	RB	PT	ACT	8'-6"	-
A158A	NEW TOILET	PCT	4PCT	EPT	GYP/PT	8'-0"	2
A158B	NEW STORAGE	LVT	RB	PT	GYP/PT	8'-0"	2
A161A	NEW TOILET	PCT	4PCT	EPT	GYP/PT	8'-0"	2
A161B	NEW STORAGE	LVT	RB	PT	GYP/PT	8'-0"	2
A162	EXISTING CLASSROOM	LVT	RB	PT	ACT	8'-6"	-
A163	EXISTING CLASSROOM	LVT	RB	PT	ACT	8'-6"	-
-	-	-	-	-	-	-	-
A166A	NEW STORAGE	LVT	RB	PT	GYP/PT	8'-0"	2
A166B	NEW STORAGE	LVT	RB	PT	GYP/PT	8'-0"	2
A167A	NEW STORAGE	LVT	RB	PT	GYP/PT	8'-0"	2
A167B	NEW STORAGE	LVT	RB	PT	GYP/PT	8'-0"	2
A168	EXISTING CLASSROOM	LVT	RB	PT	ACT	8'-6"	-
A169	EXISTING CLASSROOM	LVT	RB	PT	ACT	8'-6"	-
-	-	-	-	-	-	-	-
A172	EXISTING TOILET	PCT	4PCT	EPT	GYP/PT	8'-0"	2
A173	EXISTING TOILET	PCT	4PCT	EPT	GYP/PT	8'-0"	2
A174	EXISTING KINDERGARTEN	LVT	RB	PT	ACT	8'-6"	-
A175	EXISTING CORRIDOR	LVT	RB	PT	ACT	8'-6"	3,4
A176	EXISTING TOILET	PCT	4PCT	EPT	GYP/PT	8'-0"	2
A177	EXISTING VESTIBULE	WC	RB	PT	ACT	8'-8"	2
A178	EXISTING STORAGE	LVT	RB	ETR	ETR	-	2
A179	EXISTING CORRIDOR	LVT	RB	PT	ACT	8'-6"	3,4
A180	EXISTING CORRIDOR	LVT	RB	PT	ACT	8'-6"	3,4
A181	EXISTING RAMP	RTR	RB	PT	ACT	VARIES	-
-	-	-	-	-	-	-	-
-	-	-	-	-	-	-	-
-	-	-	-	-	-	-	-
B100	NEW PRINCIPAL'S OFFICE	CPT	RB	PT	ACT	8'-6"	-
B101	NEW MAIN OFFICE	CPT	RB	PT	ACT	9'-0"	3,4
B102	NEW WORK ROOM	CPT	RB	PT	ACT/PAD	-	2
B103	EXISTING WORK ROOM	CPT	RB	PT	ACT	-	2
B104	EXISTING TOILET	PCT	4PCT	EPT	-	-	-

WAKELY ASSOCIATES, INC.
ARCHITECTS

30500 VAN DYKE AVENUE
SUITE M-7
WARREN, MICHIGAN 48093
PH: 586.573.4100
FX: 586.573.0822
www.WakelyAIA.com

FARMINGTON PUBLIC SCHOOLS - 2015 BOND
2018 PROJECTS
KENBROOK & BEECHVIEW ELEMENTARY SCHOOLS

KENBROOK ELEMENTARY SCHOOL

ROOM FINISH SCHEDULE

PRELIMINARY ☐
DESIGN DEVELOPMENT ☐
CONSTRUCTION ■
FINAL RECORD ☐

DRAWN BY NJL
CHECKED BY BJS

REVISIONS
50% REVIEW 10/13/17

DATE: December 12, 2017

SHEET NO.

A7.2KB

JOB NO. 171712A

GENERAL DISPLAY BOARD KEYNOTES:

1. ALL WHITE BOARD/TACK BOARD SIZES AND LOCATIONS ARE TO BE COORDINATED WITH ELECTRICAL DRAWINGS TO COMPATIBILITY WITH NEW RACEWAYS.

DISPLAY BOARD KEYNOTES:

(A) NEW 48" H MARKER & 12"H TACK BOARD WITH SMART BOARD SEE DETAIL 2/A8.1WC OR 3/A8.1WC. SEE PLAN FOR WIDTH AND LOCATION. COORDINATE WITH EXISTING RACEWAYS/OBSTRUCTIONS IN FIELD AS REQ'D.

(B) PROVIDE/INSTALL NEW 60" H TACK BOARD IN SAME LOCATION ON WALL. (SAME HT. AS MARKER BOARD @ SMART BOARD) SEE PLANS FOR WIDTHS.

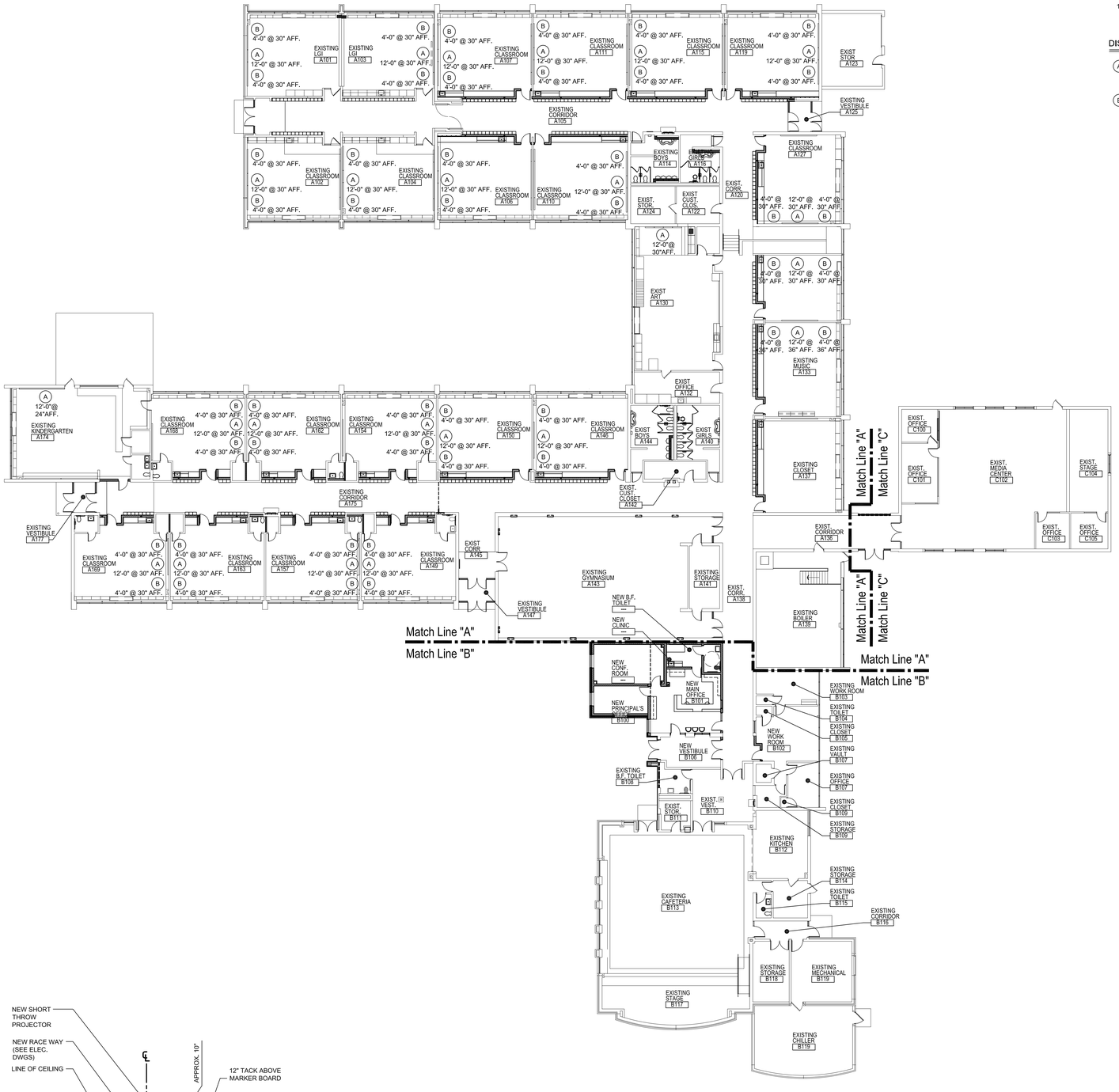

1 - COMPOSITE FLOOR PLAN

SCALE: 1/16" = 1'-0"

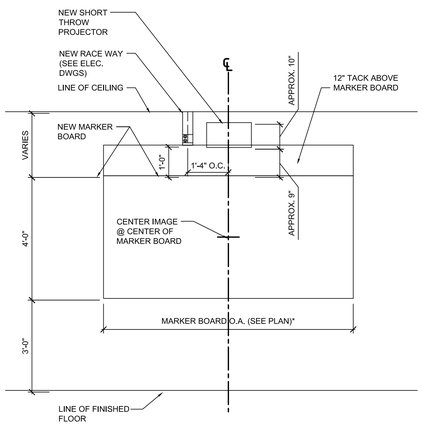

2 - TYPICAL MARKER BOARD LOCATION @ PROJECTOR LOCATION - CEILING > 8'-9" A.F.F.

SCALE: N.T.S.

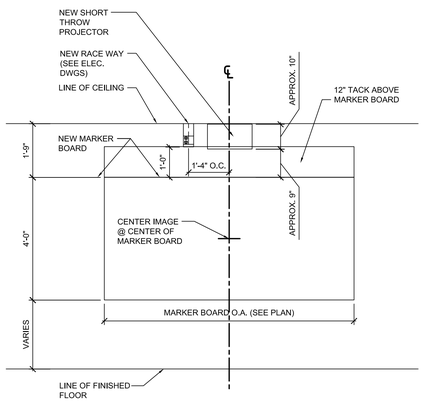

3 - TYPICAL MARKER BOARD LOCATION @ PROJECTOR LOCATION - CEILING < 8'-9" A.F.F.

SCALE: N.T.S.

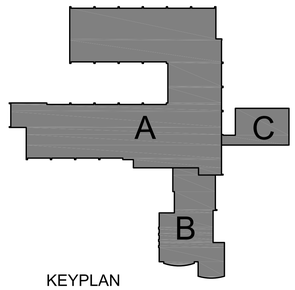

KEYPLAN

N.T.S.

WAKELY ASSOCIATES, INC. ARCHITECTS

30500 VAN DYKE AVENUE
SUITE M-7
WARREN, MICHIGAN 48093
PH: 586.573.4100
FX: 586.573.0822
www.WakelyAIA.com

FARMINGTON PUBLIC SCHOOLS - 2015 BOND
2018 PROJECTS
KENBROOK & BEECHVIEW ELEMENTARY SCHOOLS

KENBROOK ELEMENTARY SCHOOL

COMPOSTIE FLOOR PLAN

PRELIMINARY ☐
DESIGN DEVELOPMENT ☐
CONSTRUCTION ■
FINAL RECORD ☐

DRAWN BY NJL
CHECKED BY BJS

REVISIONS

DATE: December 12, 2017

SHEET NO.

A8.1KB

JOB NO. 171712A

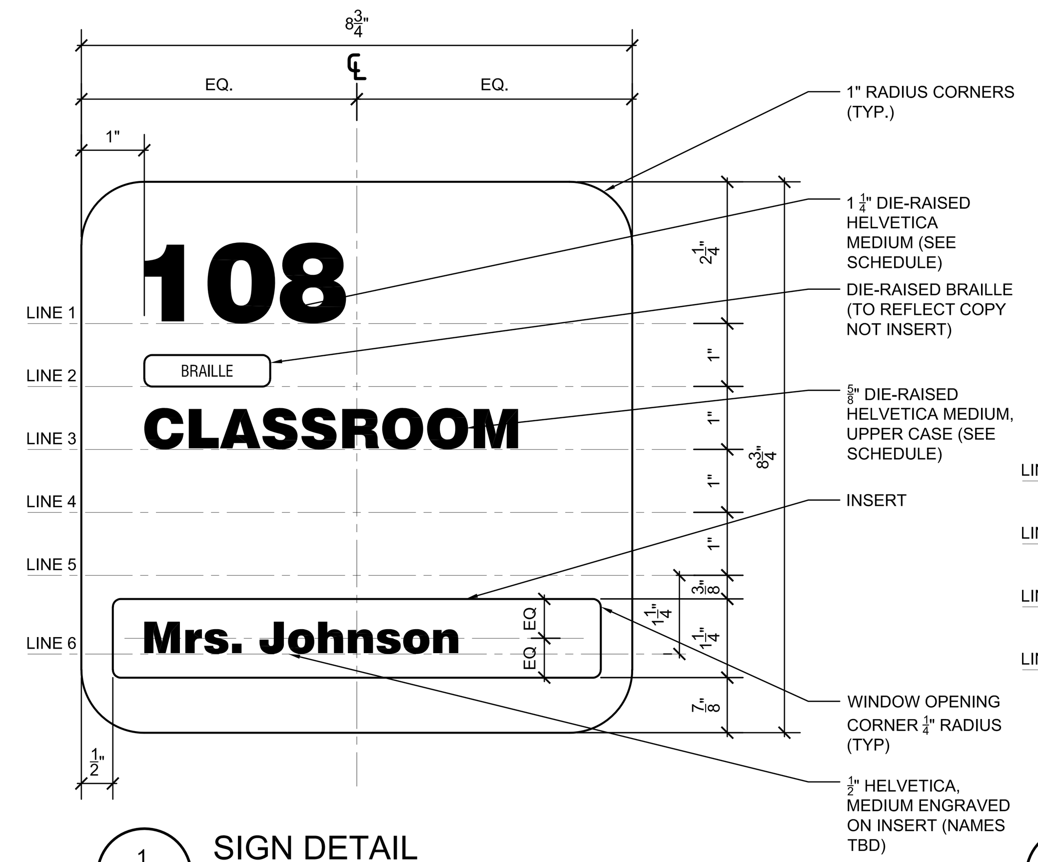

1 SIGN DETAIL
SCALE: 6" = 1'-0"

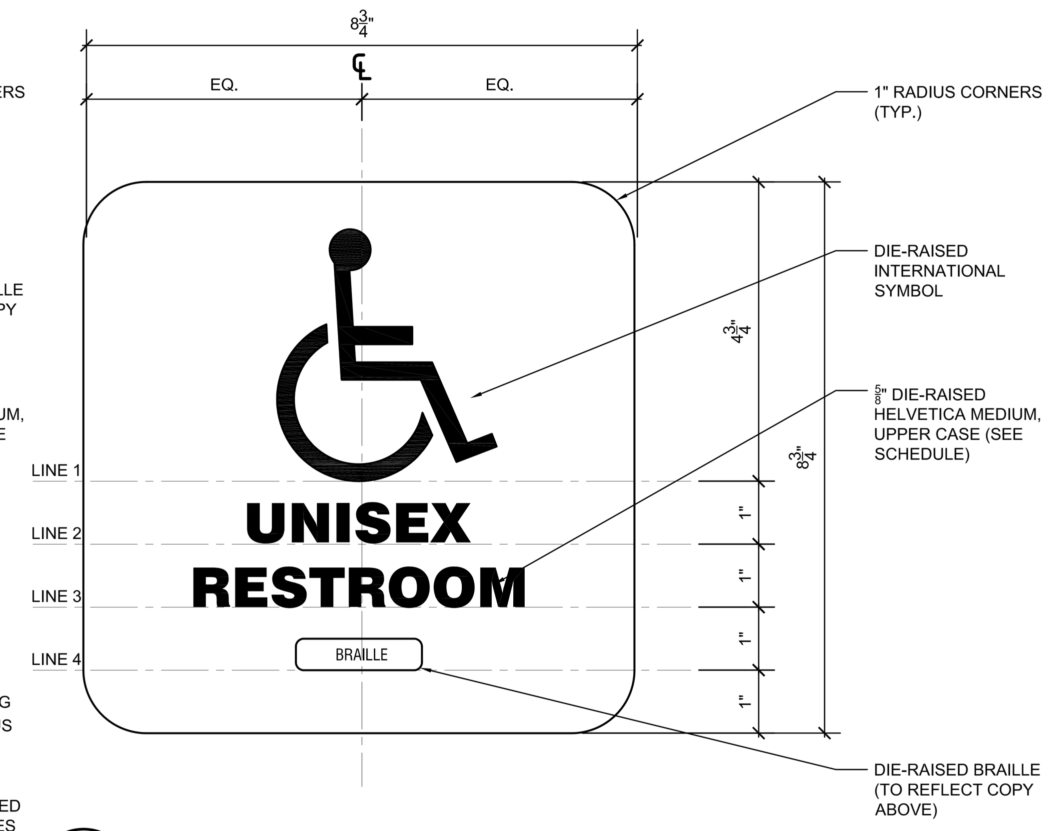

2 SIGN DETAIL
SCALE: 6" = 1'-0"

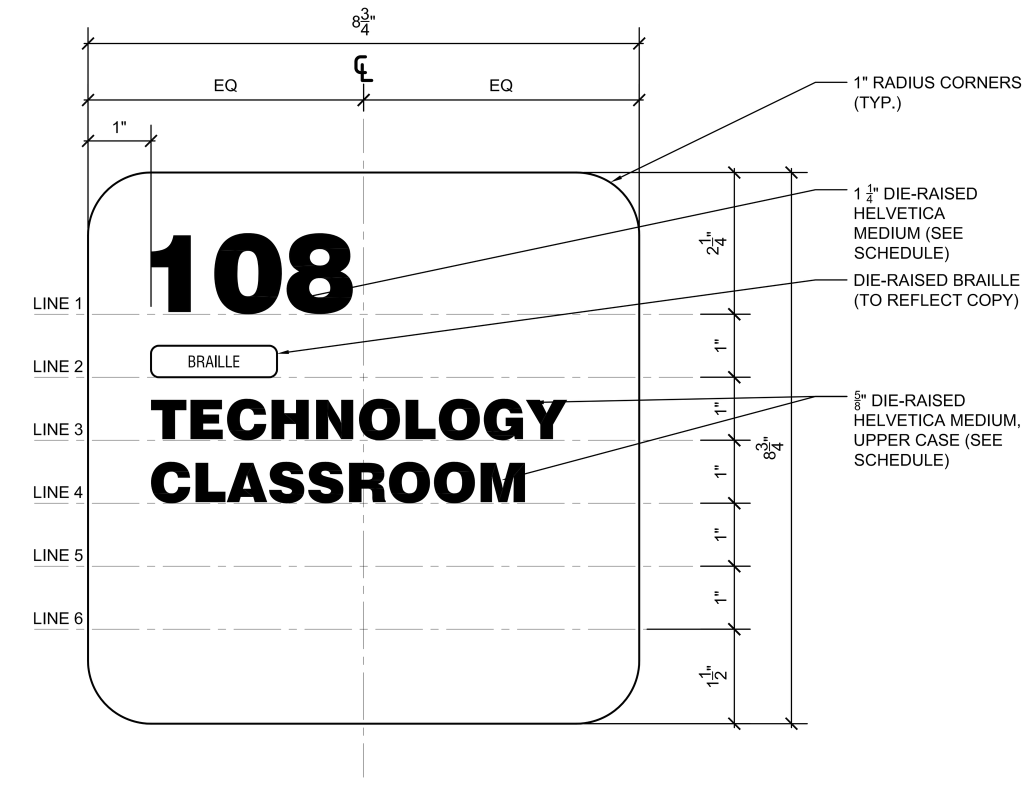

3 SIGN DETAIL
SCALE: 6" = 1'-0"

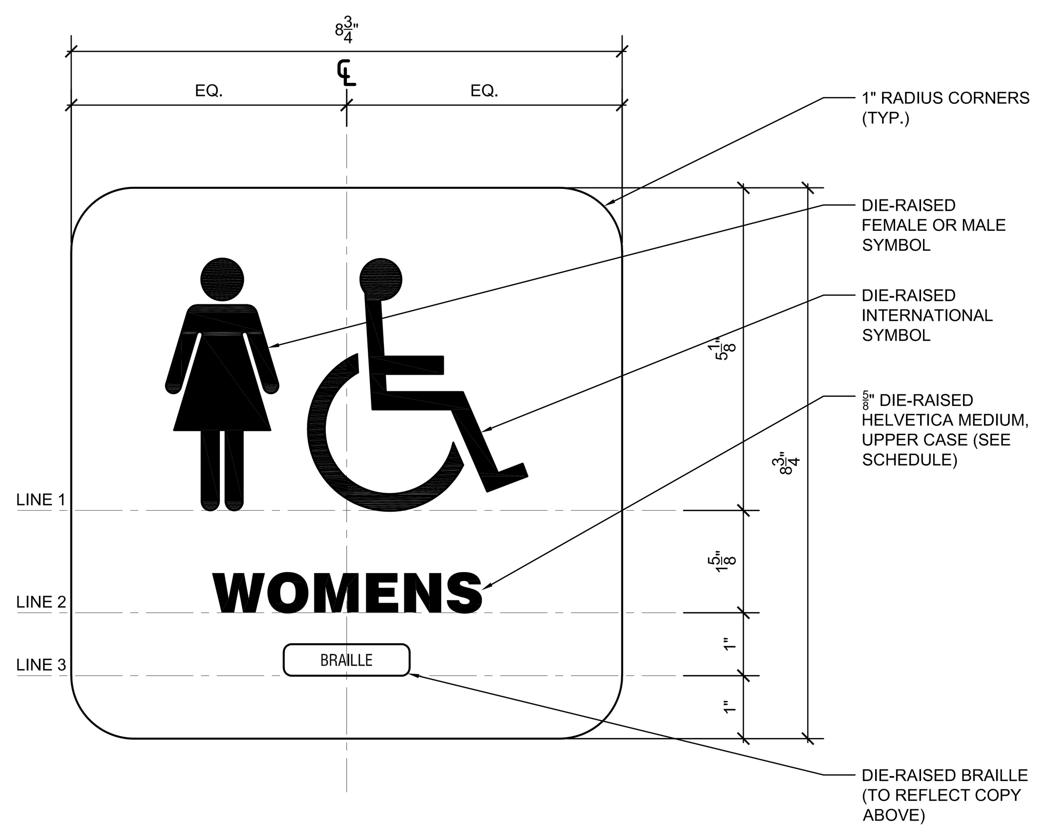

4 SIGN DETAIL
SCALE: 6" = 1'-0"

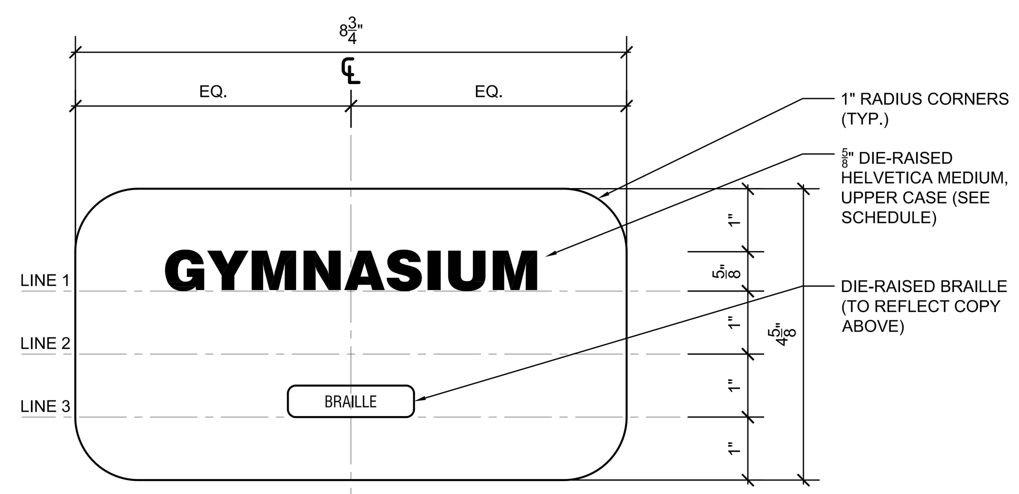

5 SIGN DETAIL
SCALE: 6" = 1'-0"

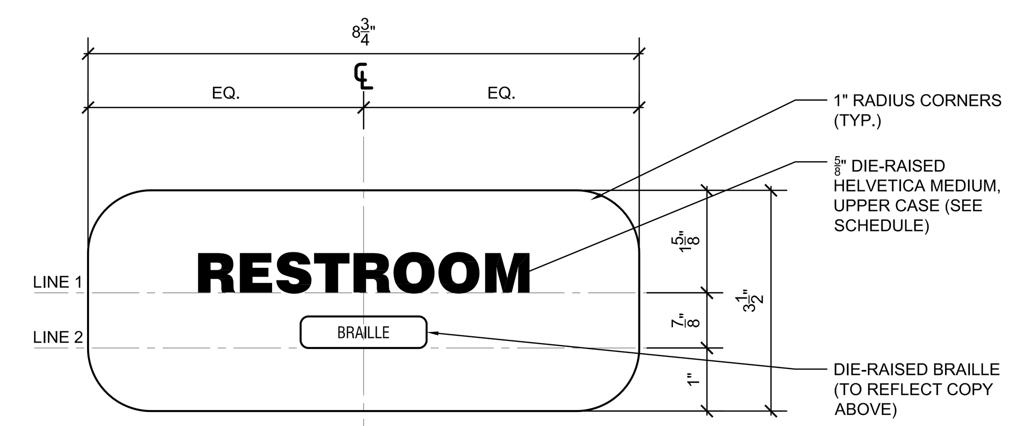

6 SIGN DETAIL
SCALE: 6" = 1'-0"

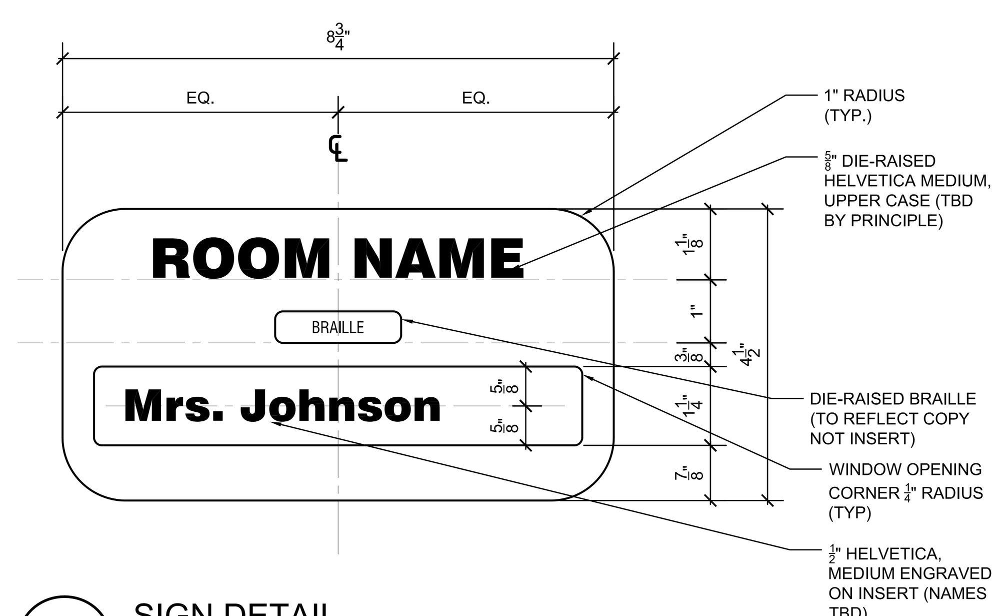

7 SIGN DETAIL
SCALE: 6" = 1'-0"

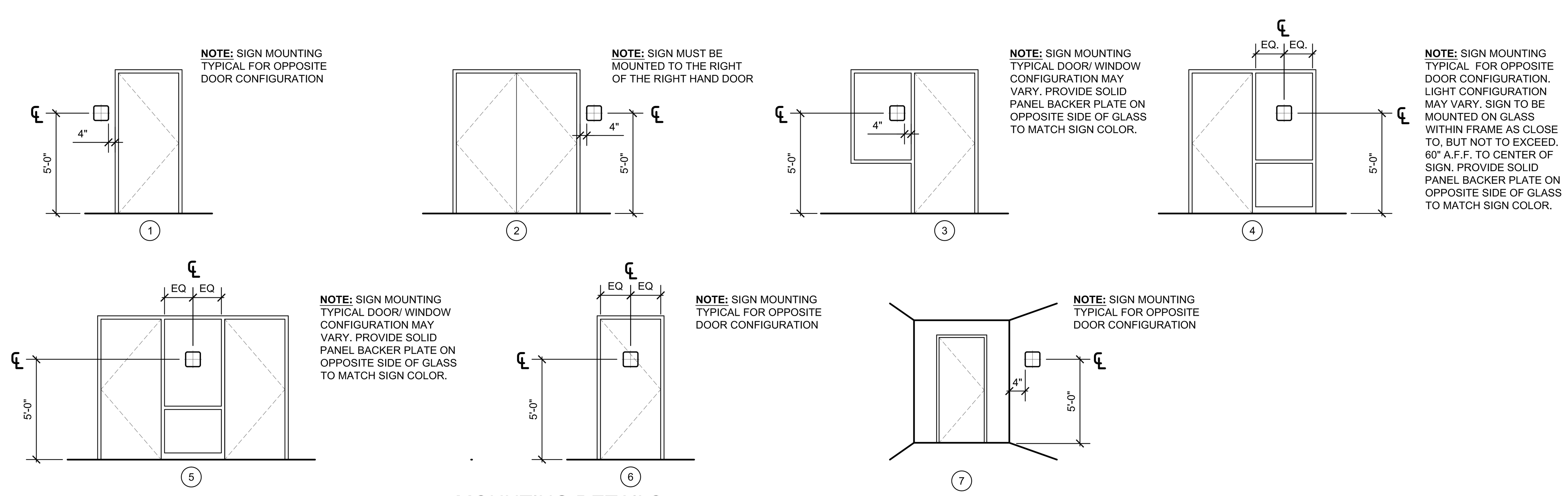

MOUNTING DETAILS
SCALE: 1/4" = 1'-0"

SIGNAGE SCHEDULE

QTY	PLAN NO.	OWNER NO.	TYPE	MOUNTING	TEXT
FIRST FLOOR					
-	-	-	-	-	-
-	-	-	-	-	-
-	-	-	-	-	-
-	-	-	-	-	-
-	-	-	-	-	-
-	-	-	-	-	-
-	-	-	-	-	-
-	-	-	-	-	-
-	-	-	-	-	-
-	-	-	-	-	-
-	-	-	-	-	-
-	-	-	-	-	-
-	-	-	-	-	-
-	-	-	-	-	-
-	-	-	-	-	-
-	-	-	-	-	-
-	-	-	-	-	-
-	-	-	-	-	-
-	-	-	-	-	-
-	-	-	-	-	-
-	-	-	-	-	-
-	-	-	-	-	-
-	-	-	-	-	-
-	-	-	-	-	-
-	-	-	-	-	-
-	-	-	-	-	-
-	-	-	-	-	-
-	-	-	-	-	-
-	-	-	-	-	-
-	-	-	-	-	-
-	-	-	-	-	-
-	-	-	-	-	-
-	-	-	-	-	-
-	-	-	-	-	-
-	-	-	-	-	-
-	-	-	-	-	-
-	-	-	-	-	-
-	-	-	-	-	-
-	-	-	-	-	-
-	-	-	-	-	-
-	-	-	-	-	-
-	-	-	-	-	-
-	-	-	-	-	-
-	-	-	-	-	-
-	-	-	-	-	-
-	-	-	-	-	-
-	-	-	-	-	-
-	-	-	-	-	-
-	-	-	-	-	-
-	-	-	-	-	-
-	-	-	-	-	-
-	-	-	-	-	-
-	-	-	-	-	-
-	-	-	-	-	-
-	-	-	-	-	-
-	-	-	-	-	-
-	-	-	-	-	-
-	-	-	-	-	-
-	-	-	-	-	-
-	-	-	-	-	-
-	-	-	-	-	-
-	-	-	-	-	-
-	-	-	-	-	-
-	-	-	-	-	-
-	-	-	-	-	-
-	-	-	-	-	-
-	-	-	-	-	-
-	-	-	-	-	-
-	-	-	-	-	-
-	-	-	-	-	-
-	-	-	-	-	-
-	-	-	-	-	-
-	-	-	-	-	-
-	-	-	-	-	-
-	-	-	-	-	-
-	-	-	-	-	-
-	-	-	-	-	-
-	-	-	-	-	-
-	-	-	-	-	-
-	-	-	-	-	-
-	-	-	-	-	-
-	-	-	-	-	-
-	-	-	-	-	-
-	-	-	-	-	-
-	-	-	-	-	-
-	-	-	-	-	-
-	-	-	-	-	-
-	-	-	-	-	-
-	-	-	-	-	-
-	-	-	-	-	-
-	-	-	-	-	-
-	-	-	-	-	-
-	-	-	-	-	-
-	-	-	-	-	-
-	-	-	-	-	-
-	-	-	-	-	-
-	-	-	-	-	-
-	-	-	-	-	-
-	-	-	-	-	-
-	-	-	-	-	-
-	-	-	-	-	-
-	-	-	-	-	-
-	-	-	-	-	-
-	-	-	-	-	-
-	-	-	-	-	-
-	-	-	-	-	-

WAKELY ASSOCIATES, INC.
ARCHITECTS

30500 VAN DYKE AVENUE
SUITE M-7
WARREN, MICHIGAN 48093
PH: 586.573.4100
FX: 586.573.0822
www.WakelyAIA.com

FARMINGTON PUBLIC SCHOOLS - 2015 BOND
2018 PROJECTS
KENBROOK & BEECHVIEW ELEMENTARY SCHOOLS

KENBROOK ELEMENTARY SCHOOL

SIGNAGE SCHEDULE AND DETAILS

PRELIMINARY ☐
DESIGN DEVELOPMENT ☐
CONSTRUCTION ☐
FINAL RECORD ■

DRAWN BY NJL
CHECKED BY BJS

REVISIONS

DATE: December 6, 2017
SHEET NO.

A8.2KB

JOB NO. 171712A

TILE FLOORING LEGEND

- 6"X36" WOOD PLANK DESIGN - LAID OUT IN PATTERN IN DETAIL 2/A8.3BV
- 6"X36" WOOD PLANK DESIGN - LAID OUT IN PATTERN IN DETAIL 3/A8.3BV
- 6" x 36" AND 18"X18" TILE DESIGN - LAID OUT IN PATTERN REPRESENTED BY DETAIL 4/A8.3BV
- WALKOFF CARPET
- CERAMIC TILE
- CARPET
- RUBBER FLOOR AND RAMP

1 COMPOSITE FLOOR PLAN

SCALE: 1/16" = 1'-0"

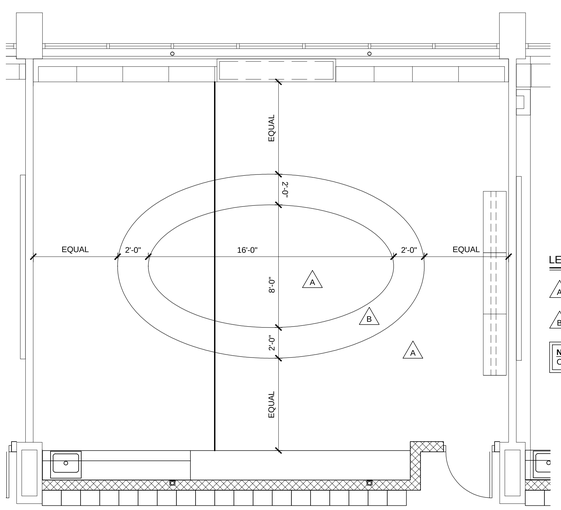

LEGEND:

- A — CPT-1 PER FINISH SCHEDULE
- B — CPT-2 PER FINISH SCHEDULE

NOTE: VERIFY EXACT LOCATION OF NEW OVAL IN ROOM WITH MUSIC TEACHER

5 MUSIC ROOM CARPET DETAIL

SCALE: 1/4" = 1'-0"

TILE PATTERNS SHOWN FOR REFERENCE FINAL PATTERNS TBD AT A LATER DATE

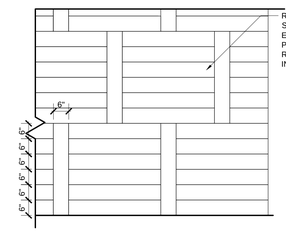

NOTE: TANDUS EVENT SERIES 6" x 36" IN COLOR: TBD

2 A8.3BV CLASSROOM FLOOR PATTERN DETAIL

SCALE: 1/2" = 1'-0"

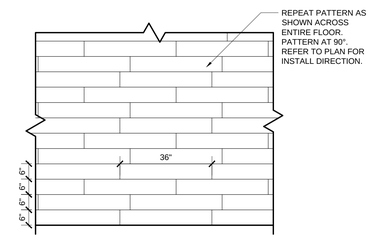

NOTE: TANDUS EVENT SERIES 6" x 36" IN COLOR: TBD

3 A8.3BV CORRIDOR FLOOR PATTERN DETAIL

SCALE: 1/2" = 1'-0"

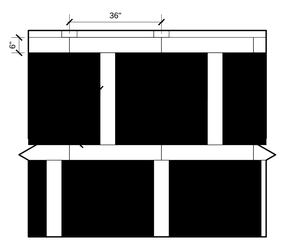

NOTE: TANDUS EVENT SERIES 6" x 36" IN COLOR: TBD

4 A8.3BV CAFETERIA FLOOR PATTERN DETAIL

SCALE: 1/4" = 1'-0"

TILE PATTERNS SHOWN FOR REFERENCE FINAL PATTERNS TBD AT A LATER DATE

WA

WAKELY ASSOCIATES, INC.
ARCHITECTS

30500 VAN DYKE AVENUE
SUITE M-7
WARREN, MICHIGAN 48093
PH: 586.573.4100
FX: 586.573.0822
www.WakelyAIA.com

FARMINGTON PUBLIC SCHOOLS - 2015 BOND
2018 PROJECTS
KENBROOK & BEECHVIEW ELEMENTARY SCHOOLS

KENBROOK ELEMENTARY SCHOOL

COMPOSTIE FLOOR PLAN

PRELIMINARY ☐
DESIGN DEVELOPMENT ☐
CONSTRUCTION ■
FINAL RECORD ☐

DRAWN BY NJL
CHECKED BY BJS

REVISIONS

DATE: December 6, 2017

SHEET NO.

A8.3KB

JOB NO. 171712A

MECHANICAL ABBREVIATION LIST

ABBREVIATION	DESCRIPTION
A	COMPRESSED AIR
A(___#)	COMPRESSED AIR (SPECIFIC PSIG)
AAV	AUTOMATIC AIR VENT
ACC	AIR COOLED CONDENSER
ACCU	AIR COOLED CONDENSING UNIT
AD	ACCESS DOOR
AD	AREA DRAIN
AE	AIR EXTRACTOR
AFF	ABOVE FINISHED FLOOR
AHU	AIR HANDLING UNIT
ALT	ALTERNATE
AMP	AMPERE
APD	AIR PRESSURE DROP
AR	ARGON
ASHRAE	AMERICAN SOCIETY OF HEATING, REFRIGERATION AND AIR-CONDITIONING ENGINEERS
ASR	AUTOMATIC SPRINKLER RISER
AUX	AUXILIARY
AV	ACID VENT
AVTR	ACID VENT THROUGH ROOF
AW	ACID WASTE
BAS	BUILDING AUTOMATION SYSTEM
BCU	BLOWER COIL UNIT
BDD	BACKDRAFT DAMPER
BFF	BELOW FINISHED FLOOR
BFP	BACKFLOW PREVENTER
BHP	BRAKE HORSEPOWER
BOD	BOTTOM OF DUCT
BOP	BOTTOM OF PIPE
BTU	BRITISH THERMAL UNIT
BTUH	BRITISH THERMAL UNIT PER HOUR
BWV	BACKWATER VALVE
C	COMMON
CAP	CAPACITY
CAV	CONSTANT AIR VOLUME
CB	CATCH BASIN
CC	COOLING COIL
CD	COLD DECK
CD	CONDENSATE DRAIN
CFCI	CONTRACTOR FURNISHED, CONTRACTOR INSTALLED
CFH	CUBIC FEET PER HOUR
CFM	CUBIC FEET PER MINUTE
CH	CHILLER
CHW	CHILLED WATER
CHWR	CHILLED WATER RETURN
CHWS	CHILLED WATER SUPPLY
CLG	COOLING
CNDS	CONDENSATE
CNDS (___#)	CONDENSATE (SPECIFIC PSIG)
CO	CLEAN OUT
CO2	CARBON DIOXIDE
CONT	CONTINUATION OR CONTINUED
CONTR	CONTRACTOR
CONV	CONVECTOR
COP	COEFFICIENT OF PERFORMACE
CP	CIRCULATING PUMP
CRU	CONDENSATE RETURN UNIT
CSS	CLINICAL SERVICE SINK
CT	COOLING TOWER
CUH	CABINET UNIT HEATER
CW	DOMESTIC COLD WATER
CWR	CONDENSER WATER RETURN
CWS	CONDENSER WATER SUPPLY
D&T	DRIP AND TRAP
DA	DISCHARGE AIR
DAT	DISCHARGE AIR TEMPERATURE
DB	DRY BULB
DDC	DIRECT DIGITAL CONTROL
DEG	DEGREE
DFU	DRAINAGE FIXTURE UNITS
DIA	DIAMETER
DMPR	DAMPER
D/N	DAY/NIGHT
DN	DOWN
DNZ	DOWNSPOUT NOZZLE
DS	DUCT SILENCER
DT	DRAIN TILE
DTC	DRAIN TILE CONNECTION
DWH	DOMESTIC WATER HEATER
DWG	DRAWING
(E)	EXISTING
E	EXHAUST GRILLE OR REGISTER
EA	EACH
EA	EXHAUST AIR
EAT	ENTERING AIR TEMPERATURE
EC	EXPANSION COMPENSATOR
ECUH	ELECTRIC CABINET UNIT HEATER
EDB	ENTERING DRY BULB
EER	ENERGY EFFICIENCY RATIO
EES	EMERGENCY EYE WASH / SHOWER
EEW	EMERGENCY EYE WASH
EF	EXHAUST FAN
EFF	EFFICIENCY
EHC	ELECTRIC HEATING COIL
EJ	EXPANSION JOINT
EL	ELEVATION
ELEC	ELECTRICAL
EMS	ENERGY MANAGEMENT SYSTEM
ERL	ENERGY RECOVERY LOOP
ERLR	ENERGY RECOVERY LOOP RETURN
ERLS	ENERGY RECOVERY LOOP SUPPLY
ERU	ENERGY RECOVERY UNIT
ESH	EMERGENCY SHOWER
ESP	EXTERNAL STATIC PRESSURE
EUH	ELECTRIC UNIT HEATER
EWB	ENTERING WET BULB
EWC	ELECTRIC WATER COOLER
EWT	ENTERING WATER TEMPERATURE
EXH	EXHAUST
F	FIRE PROTECTION
°F	DEGREES FAHRENHEIT
F&B	FACE AND BYPASS
F&T	FLOAT AND THERMOSTATIC
FA	FACE AREA
FCU	FAN COIL UNIT
FD	FLOOR DRAIN
FFD	FUNNEL FLOOR DRAIN
FH	FIRE HYDRANT
FHC	FIRE HOSE CABINET
FHR	FIRE HOSE RACK
FHV	FIRE HOSE VALVE
FLA	FULL LOAD AMPS
FLR	FLOOR
FM	FLOW METER
FMS	FLOW MEASURING STATION
FPM	FEET PER MINUTE
FP	FIRE PUMP
FPTU	FAN POWERED (AIR) TERMINAL UNIT
FS	FLOOR SINK
FSEC	FOOD SERVICE EQUIPMENT CONTRACTOR
FT	FEET
FTR	FINNED TUBE RADIATION
FV	FACE VELOCITY
G	NATURAL GAS
GA	GAUGE
GAL	GALLON
GRH	GRAVITY RELIEF HOOD
GPH	GALLONS PER HOUR
GPM	GALLONS PER MINUTE
H	HYDROGEN
HB	HOSE BIBB
HC	HEATING COIL
HD	HOT DECK
HEPA	HIGH EFFICIENCY PARTICULATE ARRESTANCE
HL	HIGH LIMIT
HOA	HAND/OFF/AUTO
HP	HEAT PUMP
HP	HORSEPOWER
HPCW	HIGH PRESSURE DOMESTIC COLD WATER
HPHW	HIGH PRESSURE DOMESTIC HOT WATER
HPHWR	HIGH PRESSURE DOMESTIC HOT WATER RETURN
HPL	HEAT PUMP LOOP
HPLR	HEAT PUMP LOOP RETURN
HPLS	HEAT PUMP LOOP SUPPLY
HR	HOUR
HTG	HEATING
HV	HEATING VENTILATING
HVAC	HEATING, VENTILATING, AIR CONDITIONING
HWH	HOT WATER HEATING
HWHR	HOT WATER HEATING RETURN
HWHS	HOT WATER HEATING SUPPLY
HW	DOMESTIC HOT WATER
HW(___)	DOMESTIC HOT WATER (SPECIFIC TEMP °F)
HWR	DOMESTIC HOT WATER RETURN
HX	HEAT EXCHANGER
HZ	HERTZ
IAQ	INDOOR AIR QUALITY
ID	INSIDE DIAMETER
IE	INVERT ELEVATION
IH	INTAKE HOOD
IN	INCHES
IR	INFRARED HEATER
IW	INDIRECT WASTE
JC	JANITOR'S CLOSET
JP	JOCKEY PUMP
KW	KILOWATT
KWH	KILOWATT-HOUR
LAT	LEAVING AIR TEMPERATURE
LAB	LABORATORY
LAV	LAVATORY
LBS	POUNDS
LDB	LEAVING DRY BULB
LL	LOW LIMIT
LPC	LOW PRESSURE CONDENSATE
LPS	LOW PRESSURE STEAM
LRA	LOCKED ROTOR AMPS
LWB	LEAVING WET BULB
LWT	LEAVING WATER TEMPERATURE
MA	MIXED AIR
MAT	MIXED AIR TEMPERATURE
MAU	MAKE-UP AIR UNIT
MAX	MAXIMUM
MBH	THOUSAND BRITISH THERMAL UNITS PER HOUR
MCA	MEDICAL COMPRESSED AIR
MCA	MINIMUM CIRCUIT AMPACITY
MCC	MOTOR CONTROL CENTER
MECH	MECHANICAL
MEZZ	MEZZANINE
MFR	MANUFACTURER
MH	MANHOLE
MIN	MINIMUM
MISC	MISCELLANEOUS
MMBH	MILLION BRITISH THERMAL UNITS PER HOUR
M/S	MOTOR STARTER
MTD	MOUNTED
MTR	MOTOR
MV	MANUAL AIR VENT
MVAC	MEDICAL VACUUM
N	NITROGEN
N2O	NITROUS OXIDE
NC	NOISE CRITERIA
NC	NORMALLY CLOSED
NCTC	NORMALLY CLOSED TIMED CLOSED
NCTO	NORMALLY CLOSED TIMED OPEN
NFPA	NATIONAL FIRE PROTECTION ASSOCIATION
NOTC	NORMALLY OPEN TIMED CLOSED
NOTO	NORMALLY OPEN TIMED OPEN
NIC	NOT IN CONTRACT
NO	NORMALLY OPEN
NOM	NOMINAL
NPCW	NON POTABLE COLD WATER
O	OXYGEN
OA	OUTSIDE AIR
OAT	OUTSIDE AIR TEMPERATURE
OBD	OPPOSED BLADE DAMPER
OC	ON CENTER/CENTER TO CENTER
OD	OUTSIDE DIAMETER
OED	OPEN ENDED DUCT
OFCI	OWNER FURNISHED, CONTRACTOR INSTALLED
OFOI	OWNER FURNISHED, OWNER INSTALLED
OL	OVERLOAD
ORC	OVERFLOW RAIN CONDUCTOR
ORD	OVERFLOW ROOF DRAIN
OS&Y	OUTSIDE SCREW AND YOKE
OV	OUTLET VELOCITY
OWS	OPERATOR WORKSTATION
PACU	PACKAGED AIR CONDITIONING UNIT
PBD	PARALLEL BLADE DAMPER
PC	PUMPED CONDENSATE
PCW	PROCESS COOLING WATER
PCWR	PROCESS COOLING WATER RETURN
PCWS	PROCESS COOLING WATER SUPPLY
PD	PRESSURE DROP (FEET OF WATER)
PH	PERIMETER HEAT
PHR	PERIMETER HEAT RETURN
PHS	PERIMETER HEAT SUPPLY
PNL	PANEL
PPM	PARTS PER MILLION
PRESS	PRESSURE
PRV	PRESSURE REDUCING VALVE
PSAN	PUMPED SANITARY
PST	PUMPED STORM
PSI	POUNDS PER SQUARE INCH
PSIA	POUNDS PER SQUARE INCH - ABSOLUTE
PSIG	POUNDS PER SQUARE INCH - GAUGE
PW	PURIFIED WATER
PWR	PURIFIED WATER RETURN
PWS	PURIFIED WATER SUPPLY
(R)	RELOCATED
R	RETURN GRILLE OR REGISTER
RA	RETURN AIR
RAT	RETURN AIR TEMPERATURE
RC	RAIN CONDUCTOR
RCP	RADIANT CEILING PANEL
RD	ROOF DRAIN
REQD	REQUIRED
REF	ROOF EXHAUST FAN
RF	RETURN FAN
RH	RELATIVE HUMIDITY
RL	REFRIGERANT LIQUID
RLFA	RELIEF AIR
RPM	REVOLUTIONS PER MINUTE
RS	REFRIGERANT SUCTION
RTU	ROOFTOP UNIT
S	SUPPLY AIR DIFFUSER OR GRILLE
SA	SOUND ATTENUATOR
SA	SUPPLY AIR
SAN	SANITARY WASTE
SAT	SUPPLY AIR TEMPERATURE
SECT	SECTION
SF	SUPPLY FAN
SH	SHOWER
SK	SINK
SMR	SNOW MELT RETURN
SMS	SNOW MELT SUPPLY
SP	STATIC PRESSURE
SPEC	SPECIFICATION
SPKLR	SPRINKLER
SQFT	SQUARE FOOT/SQUARE FEET
S/S	START/STOP
SS	SERVICE SINK
ST	STORM
STD	STANDARD
STK	STACK
STM	STEAM
STM(___#)	STEAM (SPECIFIC PSIG)
S/W	SUMMER/WINTER
SW	SWITCH
T	TRANSFER GRILLE
TC	TEMPERATURE CONTROL
TC	TEMPERING COIL
TCP	TEMPERATURE CONTROL PANEL
TD	TRENCH DRAIN
TEMP	TEMPERATURE
TEMP	TEMPORARY
TH	TERMINAL HEATING
THA	TOTAL HEAT ABSORBED
THR	TERMINAL HEATING RETURN
THR	TOTAL HEAT REJECTED
THS	TERMINAL HEATING SUPPLY
TSP	TOTAL STATIC PRESSURE
TU	(AIR) TERMINAL UNIT
TV	TURNING VANES
TYP	TYPICAL
UH	UNIT HEATER
UL	UNDERWRITER'S LABORATORY
UON	UNLESS OTHERWISE NOTED
UR	URINAL
UV	UNIT VENTILATOR
V	VALVE
V	VENT
VAC	VACUUM
VAV	VARIABLE AIR VOLUME
VB	VACUUM BREAKER
VD	VOLUME DAMPER (MANUALLY ADJUSTABLE)
VOL	VOLUME
VFC	VARIABLE FREQUENCY CONTROLLER
VTR	VENT THROUGH ROOF
VTU	VENTURI TERMINAL UNIT
VUV	VERTICAL UNIT VENTILATOR
W	WASTE
W&V	WASTE AND VENT
WB	WET BULB
WC	WATER CLOSET
WC	WATER COLUMN
WG	WATER GAUGE
WH	WALL HYDRANT
WPD	WATER PRESSURE DROP
WT	WEIGHT
XFMR	TRANSFORMER

TEMPERATURE CONTROL - PARTIAL SYMBOLS LIST

SYMBOL	DESCRIPTION	SYMBOL	DESCRIPTION
CO2	CARBON DIOXIDE SENSOR	OS	OCCUPANCY SENSOR
CO	CARBON MONOXIDE SENSOR	PT	PRESSURE TRANSMITTER
DPT	DIFFERENTIAL PRESSURE TRANSMITTER	SP	STATIC PRESSURE SENSOR OR PROBE
FM	FLOW METER		VALVE – 2 WAY CONTROL VALVE
	GUARD FOR STAT OR SENSOR		VALVE – 3 WAY CONTROL VALVE
H	HUMIDISTAT OR HUMIDITY SENSOR (AS DEFINED ON TC DRAWINGS)	T	THERMOSTAT OR TEMPERATURE SENSOR (AS DEFINED ON TC DRAWINGS)

NOTE: LIST OF ADDITIONAL SYMBOLS & ABBREVIATIONS ASSOCIATED WITH TEMPERATURE CONTROLS ARE IDENTIFIED ON TC DRAWINGS.

MECHANICAL SYMBOL LIST

PIPING SYMBOLS

SYMBOL	DESCRIPTION
AAV	AIR VENT – AUTOMATIC
MV	AIR VENT – MANUAL
BFP	BACKFLOW PREVENTER
	CATCH BASIN
	CIRCULATING PUMP
CO	CLEAN OUT – IN FLOOR
CO	CLEAN OUT – FLANGE
	DIRECTION OF FLOW
	DIRECTION OF PITCH – DOWN
	FINNED TUBE RADIATION
	FIRE PROTECTION – SIAMESE CONNECTION – FREE STANDING
	FIRE PROTECTION – SIAMESE CONNECTION – WALL MOUNTED
	FIRE PROTECTION – SPRINKLER HEAD, CONCEALED
	FIRE PROTECTION – SPRINKLER HEAD, PENDANT
	FIRE PROTECTION – SPRINKLER HEAD, UPRIGHT
	FIRE PROTECTION – SPRINKLER HEAD, SIDEWALL
	FLOOR DRAIN
	FLOOR DRAIN – ELEVATION
	FLOOR DRAIN – FUNNEL
	FLOOR DRAIN – FUNNEL, ELEVATION
	FLOW MEASURING DEVICE (FOR TEST AND BALANCING)
FS	FLOW SWITCH
FM	FLOW METER
HB	HOSE BIBB
MH	MANHOLE
	OPEN SITE DRAIN
	PIPE – ANCHOR
	PIPE – CAP OR PLUG
	PIPE – ELBOW DOWN
	PIPE – ELBOW UP
	PIPE – EXPANSION JOINT OR COMPENSATOR
	PIPE – FLANGE
	PIPE – HOSE AND BRAID FLEXIBLE CONNECTION
	PIPE – RUBBER FLEXIBLE CONNECTION
	PIPE – GUIDE
	PIPE – TEE DOWN
	PIPE – TEE UP
	PIPE – UNION
P/T	PRESSURE AND TEMPERATURE TEST PLUG
	PRESSURE GAUGE AND COCK
	REDUCER – CONCENTRIC
	REDUCER – ECCENTRIC
	ROOF/OVERFLOW DRAIN
	STEAM TRAP – FLOAT AND THERMOSTATIC
	STEAM TRAP – BUCKET
	STRAINER
	STRAINER WITH VALVE AND BLOW-OFF
	THERMOMETER
	TRAP
	VALVE – ANGLE
	VALVE – BALL
	VALVE – BUTTERFLY
0.5	VALVE – BALANCE (i.e. BALANCE VALVE TO 0.5 GPM)
0.5	VALVE – COMBINATION BALANCE & FLOW MEASURING (i.e. BALANCE VALVE TO 0.5 GPM)
	VALVE – CHECK
	VALVE – SPRING CHECK
	VALVE – GAS (MANUAL)
	VALVE – GLOBE
	VALVE – ISOLATION
	VALVE – NEEDLE
	VALVE – OS&Y
	VALVE – PLUG
	VALVE – PRESSURE REGULATING
	VALVE – PRESSURE REDUCING
	VALVE – PRESSURE RELIEF
	VALVE – PRESSURE & TEMPERATURE RELIEF
VTR	VENT THROUGH ROOF
WH	WALL HYDRANT

DOUBLE LINE PIPING SYMBOLS

SYMBOL	DESCRIPTION
	FLANGE
	FLEX CONNECTION
	STRAINER – BASKET
	STRAINER – Y TYPE
	VALVE – 2 WAY CONTROL
	VALVE – 3 WAY CONTROL
	VALVE – BUTTERFLY
	VALVE – CHECK
	VALVE – DETECTOR CHECK
	VALVE – OS&Y HORIZONTAL STEM
	VALVE – OS&Y VERTICAL STEM

DUCTWORK SYMBOLS

SYMBOL	DESCRIPTION
TU-101	AIR TERMINAL UNIT
TU-101	AIR TERMINAL UNIT WITH HEATING COIL
VTU-101	VENTURI AIR TERMINAL UNIT
VTU-101	VENTURI AIR TERMINAL UNIT WITH HEATING COIL
	DAMPER – HORIZONTAL FIRE (EXISTING, NEW)
	DAMPER – HORIZONTAL FIRE / SMOKE (EXISTING, NEW)
	DAMPER – SMOKE (EXISTING, NEW)
	DAMPER – VERTICAL FIRE (EXISTING, NEW)
	DAMPER – VERTICAL FIRE / SMOKE (EXISTING, NEW)
BDD	DAMPER – BACK DRAFT
M	DAMPER – MOTORIZED
	DAMPER – VOLUME (MANUALLY ADJUSTABLE)
	DIFFUSER – BLANK OFF
	DIFFUSER – LINEAR SLOT
	DIFFUSER – SQUARE OR RECTANGULAR
	DUCT CROSS SECTION – SUPPLY
	DUCT CROSS SECTION – RETURN
	DUCT CROSS SECTION – EXHAUST
	DUCT – FLEXIBLE CONNECTION
	DUCT – FLEXIBLE DUCT
	DUCT TAKE-OFF – ROUND CONICAL
	DUCT TAKE-OFF – RECTANGULAR WITH SHOE TAP
	ELBOW – RECTANGULAR WITH TURNING VANES
	ELBOW – RECTANGULAR/ ROUND SMOOTH RADIUS
	ELBOW DOWN – RECTANGULAR
	ELBOW DOWN – ROUND
	ELBOW UP – RECTANGULAR
	ELBOW UP – ROUND
	FAN – AXIAL
	FAN – CENTRIFUGAL (ELEVATION)
	HEATING COIL
D	INCLINED DROP IN DIRECTION OF AIRFLOW
R	INCLINED RISE IN DIRECTION OF AIRFLOW
	REGISTER – RETURN OR EXHAUST
	REGISTER – RETURN WITH BOOT
	REGISTER – TRANSFER GRILLE
	ROOF EXHAUST FAN
	TRANSITION – CONCENTRIC
	TRANSITION – ECCENTRIC
	UNIT HEATER – HORIZONTAL THROW
	UNIT HEATER – VERTICAL THROW

DOUBLE LINE DUCTWORK SYMBOLS

SYMBOL	DESCRIPTION
	DUCT TAKE-OFF – RECTANGULAR WITH SHOE TAP
	DUCT TAKE-OFF – ROUND CONICAL
	ELBOW – RECTANGULAR WITH TURNING VANES
	ELBOW – RECTANGULAR SHORT RADIUS WITH SPLITTER VANES
	ELBOW – ROUND
	ELBOW – RECTANGULAR SMOOTH RADIUS
	ELBOW DOWN – RECTANGULAR
	ELBOW DOWN – ROUND
	ELBOW UP – RECTANGULAR
	ELBOW UP – ROUND
	HEATING COIL
D	INCLINED DROP IN DIRECTION OF AIRFLOW
R	INCLINED RISE IN DIRECTION OF AIRFLOW
	TRANSITION – CONCENTRIC
	TRANSITION – ECCENTRIC

MECHANICAL DRAWING INDEX

SHEET NO.	SHEET TITLE
M0.1KB	MECHANICAL STANDARDS AND DRAWING INDEX
MD1.1KB	MECHANICAL DEMOLITION PLAN – AREA 'A'
MD1.2KB	MECHANICAL DEMOLITION PLAN – AREA 'B' AND 'C'
M2.1KB	PLUMBING NEW WORK PLAN – AREA 'A'
M2.2KB	PLUMBING NEW WORK PLAN – AREA 'B' AND 'C'
M3.1KB	HVAC PIPING NEW WORK PLAN – AREA 'A'
M3.2KB	HVAC PIPING NEW WORK PLAN – AREA 'B' AND 'C'
M4.1KB	SHEET METAL NEW WORK PLAN – AREA 'A'
M4.2KB	SHEET METAL NEW WORK PLAN – AREA 'B' AND 'C'
M6.1KB	MECHANICAL DETAILS
M6.2KB	MECHANICAL DETAILS
M6.3KB	MECHANICAL DETAILS
M7.1KB	MECHANICAL SCHEDULES
M7.2KB	MECHANICAL SCHEDULES
M7.3KB	MECHANICAL SCHEDULES
M8.1KB	TEMPERATURE CONTROL STANDARDS AND GENERAL NOTES
M8.2KB	TEMPERATURE CONTROLS
M8.3KB	TEMPERATURE CONTROLS
M8.4KB	TEMPERATURE CONTROLS

STANDARD METHODS OF NOTATION

S-1 10ø 350-4	SUPPLY DIFFUSER WITH SCHEDULE TAG "1", 10" DIAMETER NECK SIZE 350 CFM TYPICAL FOR 4
R-1 22x22 640-2	RETURN REGISTER WITH SCHEDULE TAG "1", 22"x 22" NECK SIZE 640 CFM TYPICAL FOR 2 EXHAUST REGISTER E DESIGNATION SIMILAR.
TU-101	AIR TERMINAL UNIT WITH HEATING COIL NO. 101 WITH SERVICE CLEARANCE SHOWN
VTU-101	VENTURI AIR TERMINAL WITH HEATING COIL NO. 101 WITH SERVICE CLEARANCE SHOWN
8	PIPE DIAMETER NOTATION ALL SIZES IN INCHES
8ø 22x10 18x14ø	DUCT SIZE NOTATION ALL SIZES IN INCHES OVAL DUCT RECTANGULAR DUCT
1	CONSTRUCTION NOTE NUMBER
EF 1	EQUIPMENT DESIGNATION, (i.e. EXHAUST FAN NUMBER 1)
HW-1	PIPING RISER DESIGNATION (i.e. HOT WATER RISER NUMBER 1)
	NEW SYSTEM COMPONENT EXISTING SYSTEM COMPONENT TO REMAIN POINT OF NEW CONNECTION SYMBOL
1 M5.1	SECTION OR PLAN NUMBER SHEET WHERE SECTION IS DRAWN
1 M5.1	AREA OF ENLARGEMENT PLAN NUMBER SHEET WHERE ENLARGED PLAN IS DRAWN
1 M5.1	SECTION OR PLAN NUMBER SHEET WHERE SECTION IS CUT OR ENLARGED PLAN IS REFERENCED
SHEET M1.0 / SHEET M1.1	MATCH LINE
	HEAVY LINE WEIGHT INDICATES NEW WORK
	LIGHT LINE WEIGHT INDICATES EXISTING EQUIPMENT OR REFERENCED INFORMATION
	GRAY LINE INDICATES BACKGROUND INFORMATION
	DASHED LINES INDICATE PIPING ROUTED BELOW SLAB OR GRADE
	HATCH MARKS INDICATE EQUIPMENT OR MATERIALS TO BE DISCONNECTED AND REMOVED.

SECTION OR ENLARGED PLAN

1 / M5.1

SCALE: 1/8" = 1' - 0"

NOTE: SOME SYMBOLS AND ABBREVIATIONS SHOWN MAY NOT APPLY TO THIS PROJECT.

WA

WAKELY ASSOCIATES, INC.
ARCHITECTS & ENGINEERS

30500 VAN DYKE AVE.
SUITE M-7
WARREN, MICHIGAN, 48093

TEL. 586-573-4100
FAX. 586-573-0822
E-MAIL: WA@WAKELYAIA.COM

Peter Basso Associates Inc
CONSULTING ENGINEERS
5145 Livernois, Suite 100
Troy, Michigan 48098-3276
Tel: 248-879-5668
Fax: 248-879-0007
www.PeterBassoAssociates.com
PBA Project No.: 2015-0144

FARMINGTON PUBLIC SCHOOLS - 2015 BOND
2018 PROJECTS
KENBROOK & BEECHVIEW ELEMENTARY SCHOOLS

KENBROOK ELEMENTARY SCHOOL

MECHANICAL STANDARDS AND DRAWING INDEX

PRELIMINARY ☐
DESIGN DEVELOPMENT ☐
CONSTRUCTION ■
FINAL RECORD ☐

DRAWN BY: JRM
CHECKED BY: SVM

REVISIONS:

DATE: 12-15-17

SHEET NO.: M0.1KB

JOB NO.: 171712A

g:\2015\2015-0144-00\Cad\kenbrook es\2015-0144-M0-IND.dwg, M0.1, 12/12/2017 2:25:54 PM, Suha A. Matti, _Default.pc3 ,0.09699, Peter Basso Associates Inc.

THE FOLLOWING DIMENSION EQUALS ONE INCH WHEN PRINTED TO SCALE.

KEY PLAN

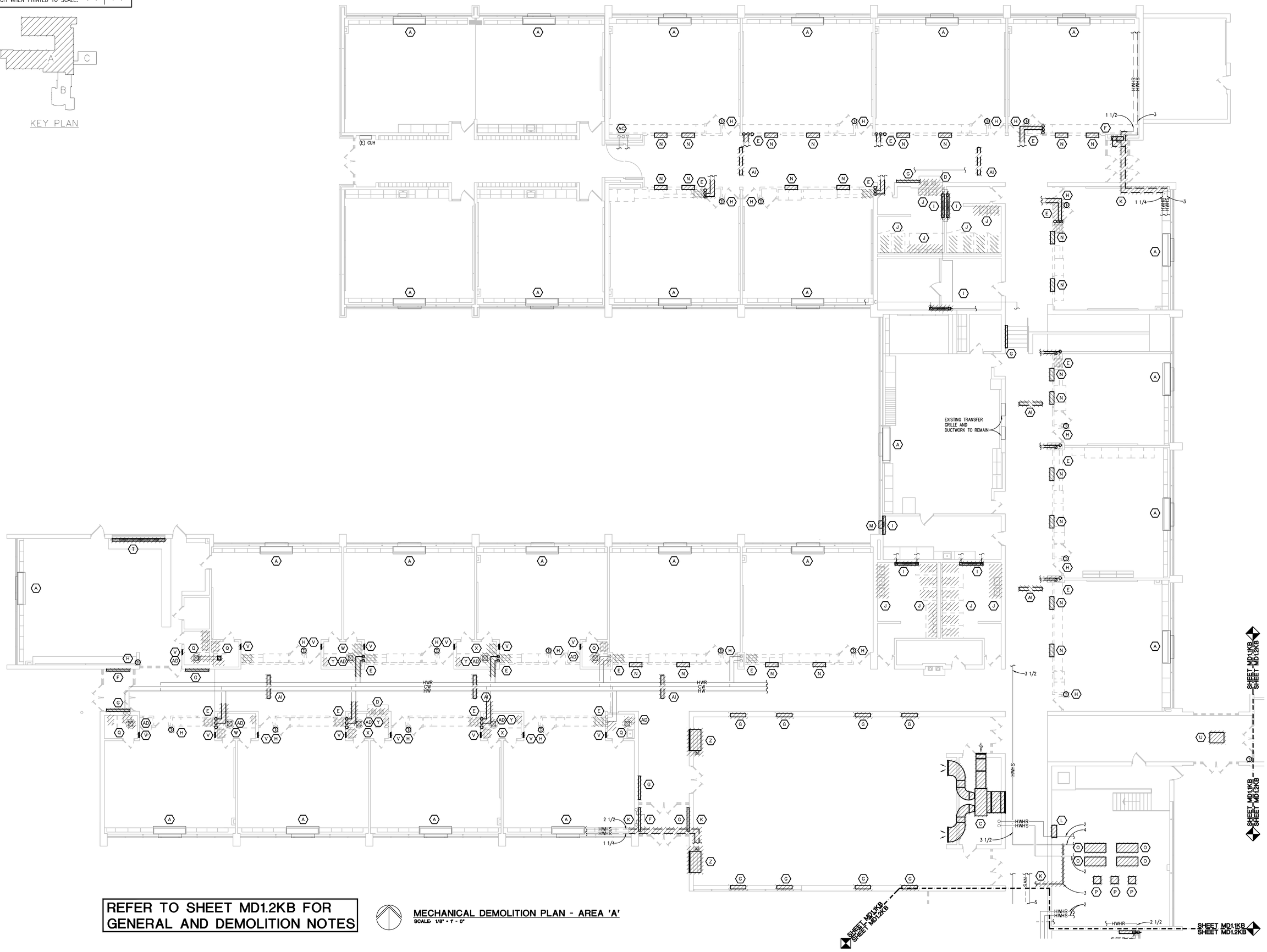

REFER TO SHEET MD1.2KB FOR GENERAL AND DEMOLITION NOTES

MECHANICAL DEMOLITION PLAN - AREA 'A'

SCALE: 1/8" = 1' - 0"

WAKELY ASSOCIATES, INC.
ARCHITECTS & ENGINEERS

30500 VAN DYKE AVE.
SUITE M-7
WARREN, MICHIGAN, 48093

TEL. 586-573-4100
FAX. 586-573-0822
E-MAIL: WA@WAKELYAIA.COM

Peter Basso Associates Inc
CONSULTING ENGINEERS
5145 Livernois, Suite 100
Troy, Michigan 48098-3276
Tel: 248-879-5668
Fax: 248-879-0007
www.PeterBassoAssociates.com
PBA Project No.: 2015-0144

FARMINGTON PUBLIC SCHOOLS - 2015 BOND
2018 PROJECTS
KENBROOK & BEECHVIEW ELEMENTARY SCHOOLS

KENBROOK ELEMENTARY SCHOOL

MECHANICAL DEMOLITION PLAN - AREA 'A'

PRELIMINARY ☐
DESIGN DEVELOPMENT ☐
CONSTRUCTION ■
FINAL RECORD ☐

DRAWN BY: JRM
CHECKED BY: SVM

REVISIONS:

DATE: 12-15-17

SHEET NO.:

MD1.1KB

JOB NO.: 171712A

g:\2015\2015-0144-00\Cad\kenbrook es\2015-0144-MD1-DP1.dwg, MD1.1KB, 12/12/2017 2:26:03 PM, Suha A. Matti, _Default.pc3 ,0.09699, Peter Basso Associates Inc.

THE FOLLOWING DIMENSION EQUALS ONE INCH WHEN PRINTED TO SCALE.

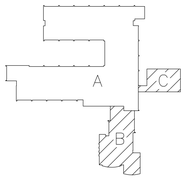

KEY PLAN

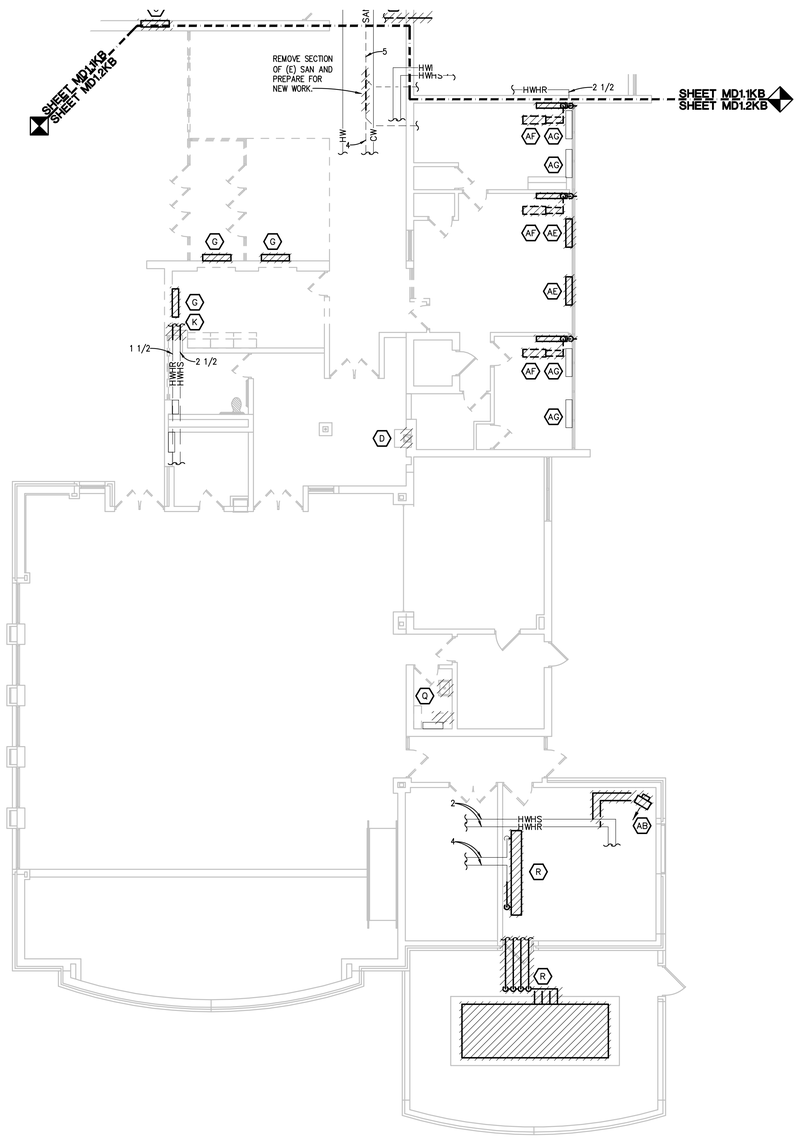

MECHANICAL DEMOLITION PLAN - AREA 'B'

SCALE: 1/8" = 1' - 0"

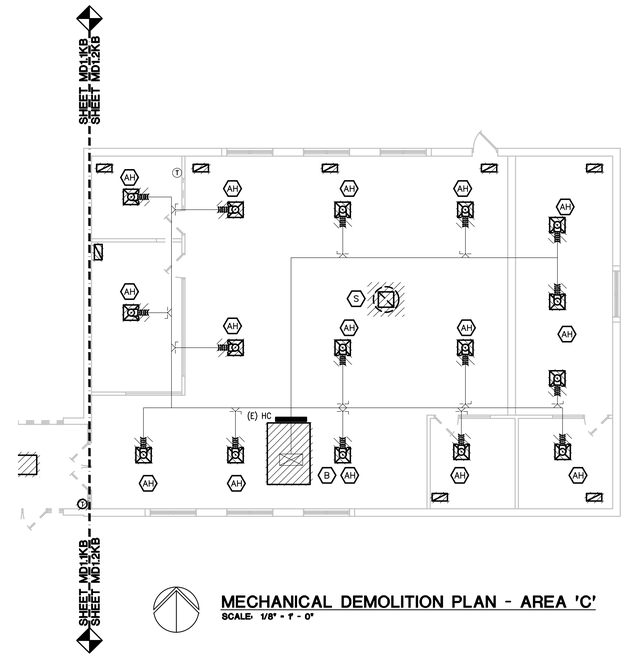

MECHANICAL DEMOLITION PLAN - AREA 'C'

SCALE: 1/8" = 1' - 0"

MECHANICAL GENERAL DEMOLITION NOTES:

1. ANY INTERRUPTION OF EXISTING SERVICES AND/OR EQUIPMENT SHALL BE PERFORMED AT A TIME APPROVED IN ADVANCE BY THE OWNER'S REPRESENTATIVE.
2. THESE DRAWINGS ARE DIAGRAMMATIC AND INDICATE THE GENERAL EXTENT OF THE WORK. ACTUAL ROUTING AND SIZES OF EXISTING PIPING AND DUCTWORK MIGHT DIFFER TO A LIMITED EXTENT FROM WHAT IS SHOWN. MAJOR DISCREPANCIES BETWEEN THE DRAWINGS AND ACTUAL EXISTING CONDITIONS SHALL BE REPORTED TO THE ENGINEER.
3. THE EXACT EXTENT OF DEMOLITION SHALL BE AS REQUIRED BY THE NEW WORK.
4. ALL MECHANICAL ITEMS TO BE REMOVED SHALL BE REMOVED COMPLETE, INCLUDING ALL RELATED ITEMS SUCH AS HANGERS, SUPPORTS, CONTROLS, ETC. CAP ALL OPEN ENDED PIPES AND DUCTWORK.

DEMOLITION KEY NOTES:

A. REMOVE EXISTING 2-WAY HOT WATER HEATING AND 2-WAY CHILLED WATER CONTROL VALVE AND ACTUATOR FROM EXISTING UNIT VENTILATOR. PREPARE PIPING FOR NEW VALVES. UNDER FULL SIMULATED LOAD, PROVIDE PRE-DEMOLITION HOT WATER HEATING AND CHILLED WATER WATER FLOW READINGS. RECORD READINGS FOR USE IN POST CONSTRUCTION VALVE BALANCING.

B. REMOVE EXISTING MEDIA CENTER ROOFTOP UNIT AND CONTROLS COMPLETE. PREPARE DUCTWORK FOR NEW CONNECTIONS. PREPARE EXISTING CURB FOR NEW WORK. REMOVE EXISTING EXHAUST FAN, DUCTWORK, AND CONTROLS COMPLETE. CAP EXISTING ROOF CURB. REFER TO ROOF CURB CAP DETAIL ON SHEET M6.2.

C. REMOVE INDOOR AIR HANDLER, SUPPLY DUCTWORK, RETURN DUCTWORK, OUTSIDE AIR DUCTWORK AND LOUVER, AND CONTROLS COMPLETE. PREPARE HWHS/R PIPING FOR NEW WORK.

D. REMOVE EXISTING DRINKING FOUNTAIN. PREPARE PIPING FOR NEW WORK.

E. REMOVE EXISTING SINK AND ASSOCIATED CW, HW, SAN, AND VENT PIPING BACK TO SOURCE AND PREPARE PIPING FOR NEW WORK.

F. REMOVE EXISTING CABINET UNIT HEATER/CONVECTOR AND CONTROLS COMPLETE. CAP PIPING BELOW FLOOR IN A CONCEALED MANOR. PREPARE EXISTING WALL OPENING FOR NEW UNIT.

G. REMOVE EXISTING CABINET UNIT HEATER/CONVECTOR AND CONTROLS COMPLETE. REMOVE HWHS/R PIPING BACK TO SOURCE AND CAP. IN-FILL OPENING TO MATCH INTERIOR EXISTING CONDITIONS. REFER TO ARCHITECTURAL DRAWINGS.

H. REMOVE/REINSTALL EXISTING TEMPERATURE SENSOR. REFER TO NEW WORK PLAN FOR NEW LOCATION.

I. REMOVE EXISTING FINNED TUBE RADIATION AND PREPARE HWHS/R PIPING FOR NEW WORK.

J. REMOVE EXISTING PLUMBING FIXTURE INCLUDING FLUSH VALVE AND FAUCET. PREPARE CW, HW, SAN, AND VENT PIPING FOR NEW WORK.

K. PREPARE EXISTING HWHS/R PIPING IN DEPRESSED TRENCH FOR NEW PIPING. REFER TO NEW WORK PLAN FOR NEW PIPE ROUTING. ABANDON DEMOED HWHS/R PIPING IN TRENCH. SAW CUT AND PATCH AS REQUIRED.

L. REMOVE EXISTING JCI NETWORK CONTROLLER AND PREPARE FOR NEW JCI FACILITY CONTROLLER.

M. REMOVE WALL MOUNTED EXHAUST FAN. PATCH OPENING TO MATCH INTERIOR AND EXTERIOR EXISTING CONDITIONS. COORDINATED WITH ARCHITECTURAL TRADES.

N. REMOVE EXISTING CLASSROOM RELIEF TRANSFER DUCT.

O. REMOVE EXISTING HWH DISTRIBUTION PUMPS. PREPARE HWHS/R PIPING FOR NEW WORK. PRIOR TO DEMOLITION PROVIDE HOT WATER FLOWS AND HEAD PRESSURE READINGS UNDER SIMULATED FULL LOAD. RECORD READINGS FOR POST CONSTRUCTION BALANCING. SUBMIT READINGS TO ENGINEER FOR FINALIZED PUMP SELECTIONS.

P. REMOVE EXISTING BOILER CIRCULATION PUMPS. PREPARE HWHS/R PIPING FOR NEW WORK. PRIOR TO DEMOLITION PROVIDE HOT WATER FLOWS AND HEAD PRESSURE READINGS UNDER SIMULATED FULL LOAD. RECORD READINGS FOR POST CONSTRUCTION BALANCING. SUBMIT READINGS TO ENGINEER FOR FINALIZED PUMP SELECTIONS.

Q. REMOVE EXISTING PLUMBING FIXTURES INCLUDING FLUSH VALVE AND FAUCET. PREPARE CW, HW, SAN, AND VENT PIPING FOR NEW WORK.

R. REMOVE EXISTING AIR COOLED CHILLER, REMOTE EVAPORATIVE BUNDLE, REFRIGERANT PIPING, AND CONTROLS COMPLETE. PREPARE CHILLED WATER PIPING FOR NEW WORK.

S. REMOVE EXISTING EXHAUST FAN, DUCTWORK, GRILLE, AND CONTROLS COMPLETE. CAP ROOF CURB. REFER TO ROOF CURB CAP DETAIL ON SHEET M6.2.

T. DISCONNECT EXISTING FINNED TUBE RADIATION AND ABANDON UNIT IN PLACE.

U. REMOVE EXISTING CEILING MOUNTED CABINET UNIT HEATER AND CONTROLS COMPLETE. PREPARE HOT WATER HEATING PIPING FOR NEW WORK.

V. REMOVE EXISTING TRANSFER GRILLE. IN-FILL OPENING TO MATCH EXISTING CONDITIONS. COORDINATE WITH ARCHITECTURAL TRADES.

W. REMOVE EXISTING PLUMBING FIXTURES INCLUDING FLUSH VALVE AND FAUCET COMPLETE. REMOVE CW, HW, AND VENT PIPING BACK TO SOURCE AND CAP. CAP SAN PIPING BELOW FLOOR IN A CONCEAL MANOR.

X. REMOVE EXISTING PLUMBING FIXTURES INCLUDING FLUSH VALVE AND FAUCET COMPLETE. REMOVE CW, HW, AND VENT PIPING BACK TO SOURCE AND PREPARE PIPING FOR NEW WORK. REMOVE SAN PIPING BELOW FLOOR AND PREPARE FOR NEW WORK. SAW CUT AND PATCH AS REQUIRED TO RELOCATE SAN PIPING

Y. REMOVE EXISTING URINAL INCLUDING FLUSH VALVE COMPLETE. REMOVE CW PIPING BACK TO SOURCE AND CAP. CAP SAN PIPING IN A CONCEALED MANOR.

Z. REMOVE EXISTING LOUVER, DUCTWORK, AND CONTROLS COMPLETE. IN-FILL OPENING TO MATCH EXISTING INTERIOR AND EXTERIOR FINISHES. COORDINATE WITH ARCHITECTURAL DRAWINGS.

AA. DISCONNECT EXISTING CABINET UNIT HEATER FROM UNDERGROUND PIPING. PREPARE EXISTING CABINET UNIT HEATER FOR NEW PIPING FROM ABOVE.

AB. REMOVE EXISTING UNIT HEATER AND CONTROLS COMPLETE. REMOVE HWHS/R PIPING BACK TO SOURCE AND CAP.

AC. REMOVE EXISTING SINK. PREPARE CW, HW, VENT, AND SAN PIPE ROUGH-INS FOR NEW WORK.

AD. REMOVE EXISTING EXHAUST GRILLE AND PREPARE DUCTWORK FOR NEW WORK.

AE. REMOVE EXISTING RADIANT FIN TUBE. CAP HWHS/R PIPING IN TRENCH. SAW CUT AND PATCH AS REQUIRED.

AF. REMOVE EXISTING SPLIT SYSTEM AIR CONDITIONING UNIT, ROOF MOUNTED CONDENSER, REFRIGERANT PIPING, AND CONTROLS COMPLETE. CAP PIPING ROOF PORTAL AND CONDENSATE WALL PENETRATION.

AG. REMOVE EXISTING TWO POSITION CONTROL VALVE. PREPARE PIPING FOR NEW ELECTRIC VALVE.

AH. REMOVE EXISTING DIFFUSER AND GRILLE. PREPARE DUCTWORK FOR NEW WORK.

AI. REMOVE EXISTING GRAVITY RELIEF HOOD. EXISTING CURB TO REMAIN. PREPARE EXISTING ROOF CURB FOR NEW WORK.

WAKELY ASSOCIATES, INC.
ARCHITECTS & ENGINEERS

30500 VAN DYKE AVE.
SUITE M-7
WARREN, MICHIGAN, 48093

TEL. 586-573-4100
FAX. 586-573-0822
E-MAIL: WA@WAKELYAIA.COM

Peter Basso Associates Inc
CONSULTING ENGINEERS
5145 Livernois, Suite 100
Troy, Michigan 48098-3276
Tel: 248-879-5668
Fax: 248-879-0007
www.PeterBassoAssociates.com
PBA Project No.: 2015-0144

FARMINGTON PUBLIC SCHOOLS - 2015 BOND
2018 PROJECTS
KENBROOK & BEECHVIEW ELEMENTARY SCHOOLS

KENBROOK ELEMENTARY SCHOOL

MECHANICAL DEMOLITION PLAN - AREA 'B' AND 'C'

PRELIMINARY ☐
DESIGN DEVELOPMENT ☐
CONSTRUCTION ■
FINAL RECORD ☐

DRAWN BY: JRM
CHECKED BY: SVM

REVISIONS:

DATE: 12-15-17

SHEET NO.:

MD1.2KB

JOB NO.: 171712A

g:\2015\2015-0144-00\Cad\kenbrook es\2015-0144-MD1-DP1.dwg, MD1.2KB, 12/12/2017 2:26:05 PM, Suha A. Matti, _Default.pc3 ,0.09699, Peter Basso Associates Inc.

THE FOLLOWING DIMENSION EQUALS ONE INCH WHEN PRINTED TO SCALE.

KEY PLAN

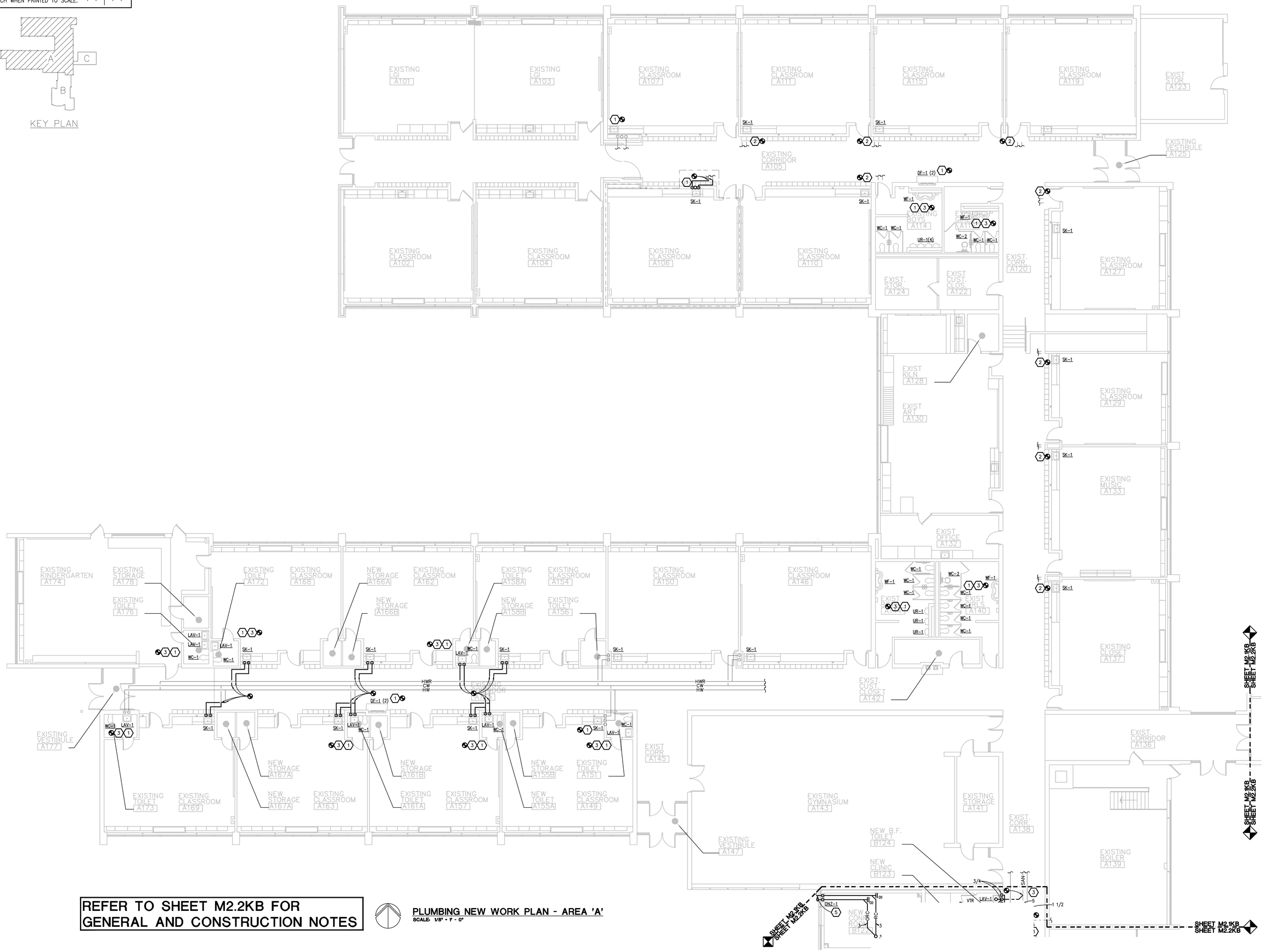

REFER TO SHEET M2.2KB FOR GENERAL AND CONSTRUCTION NOTES

PLUMBING NEW WORK PLAN - AREA 'A'

SCALE: 1/8" = 1' - 0"

WAKELY ASSOCIATES, INC.
ARCHITECTS & ENGINEERS

30500 VAN DYKE AVE.
SUITE M-7
WARREN, MICHIGAN, 48093

TEL. 586-573-4100
FAX. 586-573-0822
E-MAIL: WA@WAKELYAIA.COM

Peter Basso Associates Inc
CONSULTING ENGINEERS
5145 Livernois, Suite 100
Troy, Michigan 48098-3276
Tel: 248-879-5668
Fax: 248-879-0007
www.PeterBassoAssociates.com
PBA Project No.: 2015-0144

FARMINGTON PUBLIC SCHOOLS - 2015 BOND
2018 PROJECTS
KENBROOK & BEECHVIEW ELEMENTARY SCHOOLS

KENBROOK ELEMENTARY SCHOOL

PLUMBING NEW WORK PLAN - AREA 'A'

PRELIMINARY ☐
DESIGN DEVELOPMENT ☐
CONSTRUCTION ■
FINAL RECORD ☐

DRAWN BY: JRM
CHECKED BY: SVM

REVISIONS:

DATE: 12-15-17

SHEET NO.: M2.1KB

JOB NO.: 171712A

g:\2015\2015-0144-00\Cad\kenbrook es\2015-0144-M2-PL1.dwg, M2.1KB, 12/12/2017 2:26:15 PM, Suha A. Matti, _Default.pc3 ,0.09699, Peter Basso Associates Inc.

THE FOLLOWING DIMENSION EQUALS ONE INCH WHEN PRINTED TO SCALE.

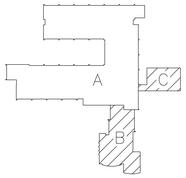

KEY PLAN

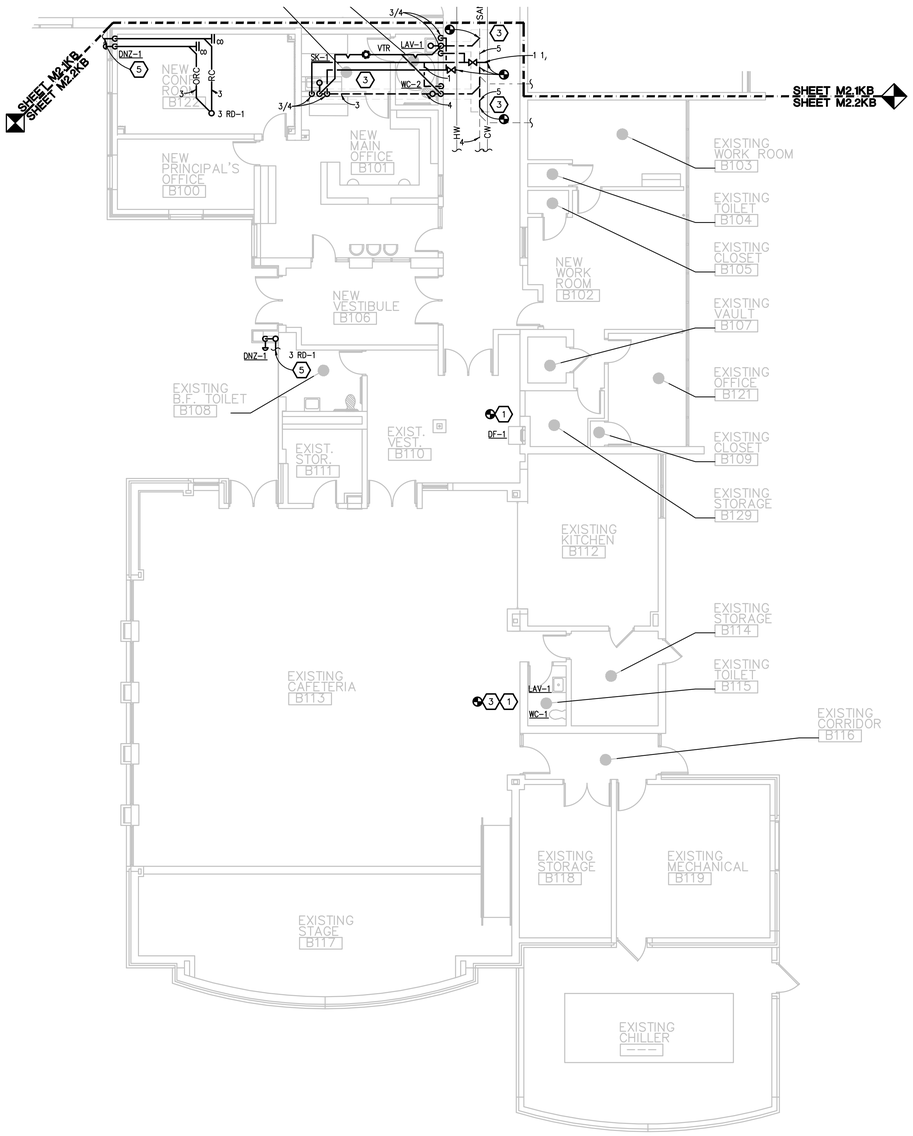

PLUMBING NEW WORK PLAN - AREA 'B'

SCALE: 1/8" = 1' - 0"

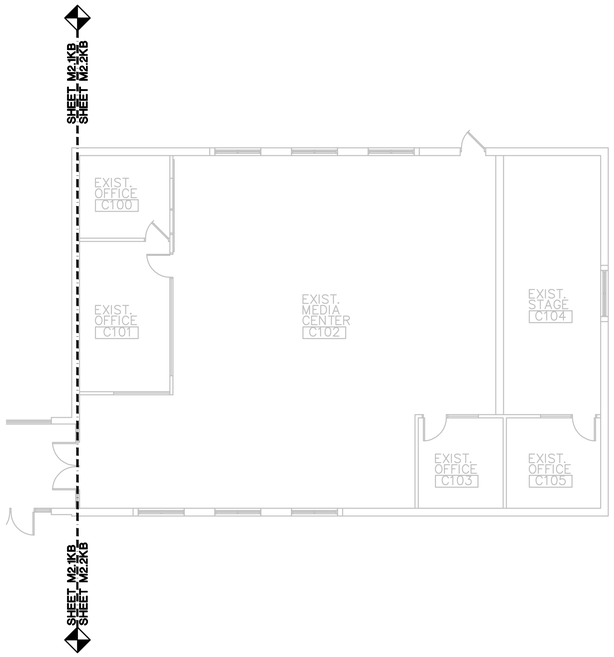

PLUMBING NEW WORK PLAN - AREA 'C'

SCALE: 1/8" = 1' - 0"

PLUMBING GENERAL NOTES:

1. THESE DRAWINGS ARE DIAGRAMMATIC, AND REPRESENT THE GENERAL INTENT AND ARRANGEMENT OF SYSTEMS. THEY ARE NOT TO BE CONSIDERED FABRICATION/COORDINATION/SHOP DRAWINGS. COORDINATION WITH OTHER TRADES IS REQUIRED. PROVIDE THE ADDITIONAL FITTINGS AND OFFSETS THAT WILL BE REQUIRED TO COMPLETE EACH SYSTEM AND TO AVOID INTERFERENCES WITH ALL OTHER SYSTEMS INCLUDING THE STRUCTURE, SHEET METAL, OTHER PIPING SYSTEMS, ELECTRICAL CONDUITS, BUS DUCTS, CABLE TRAY, LIGHT FIXTURES, ETC. AND/OR OTHER SPACE CONSTRAINTS.
2. INSTALL SYSTEMS SUCH THAT REQUIRED CLEARANCE AND SERVICE ACCESS SPACE IS PROVIDED AROUND ALL MECHANICAL AND ELECTRICAL EQUIPMENT, AND AROUND ANY COMPONENTS WHICH REQUIRE SERVICE ACCESS.
3. PIPING SHALL NOT BE INSTALLED ABOVE ELECTRICAL TRANSFORMERS, SWITCHBOARDS, PANELBOARDS OR MOTOR CONTROL CENTERS.
4. COORDINATE AND PROVIDE ACCESS DOORS WITHIN INACCESSIBLE CEILING, SHAFT, AND CHASE AREAS FOR ALL COMPONENTS WHICH REQUIRE SERVICE ACCESS. REFER TO ARCHITECTURAL DRAWINGS FOR CEILING TYPES.
5. PROVIDE SUPPLEMENTARY STEEL AS REQUIRED FOR THE PROPER SUPPORT OF ALL SYSTEMS.
6. REFER TO ARCHITECTURAL PLANS FOR DIMENSIONED LOCATIONS OF PLUMBING FIXTURES.
7. HOT AND COLD WATER PIPING RUN-OUTS TO LAVATORIES AND SINKS SHALL BE 1/2" UNLESS OTHERWISE NOTED.
8. PLUMBING VENT PIPING THROUGH ROOF SHALL BE LOCATED A MINIMUM OF 10'-0" FROM ANY FRESH AIR INTAKE LOCATION AND A MINIMUM OF 18" CLEAR FROM THE INSIDE FACE OF PARAPET.
9. PROVIDE CODE REQUIRED CLEARANCE FOR ALL CLEANOUTS INSTALLED IN SANITARY WASTE AND VENT PIPING.
10. MINIMUM UNDERGROUND PIPE SIZE SHALL BE 3".
11. WATER SERVICE ENTRANCE PIPING SHALL BE BURIED WITH DEPTH OF COVER OVER TOP OF PIPE OF AT LEAST , OR WITH TOP OF PIPE AT LEAST 12" BELOW LEVEL OF MAXIMUM FROST PENETRATION, OR AS REQUIRED BY AUTHORITIES HAVING JURISDICTION, WHICHEVER IS DEEPEST.

CONSTRUCTION KEY NOTES:

1. EXTEND/MODIFY EXISTING CW/HW/SAN/VENT PIPING AS REQUIRED TO FACILITATE THE INSTALLATION OF NEW FIXTURES. SAWCUT AND PATCH FLOOW TO EXTEND EXISTING UNDERGROUND SANITARY.
2. REFER TO EXISTING CLASSROOM A106 FOR TYPICAL NEW SINK PIPING LAYOUT.
3. DASHED LINE INDICATES TO SAW CUT AND PATCH FLOOR.
4. SNAKE SAN PIPING UPON CONFLETION OF CONSTRUCTION.
5. REFER TO CIVIL DRAWINGS FOR STORM CONTINUATION.

WAKELY ASSOCIATES, INC.
ARCHITECTS & ENGINEERS

30500 VAN DYKE AVE.
SUITE M-7
WARREN, MICHIGAN, 48093

TEL. 586-573-4100
FAX. 586-573-0822
E-MAIL: WA@WAKELYAIA.COM

Peter Basso Associates Inc
CONSULTING ENGINEERS
5145 Livernois, Suite 100
Troy, Michigan 48098-3276
Tel: 248-879-5668
Fax: 248-879-0007
www.PeterBassoAssociates.com
PBA Project No.: 2015-0144

FARMINGTON PUBLIC SCHOOLS - 2015 BOND
2018 PROJECTS
KENBROOK & BEECHVIEW ELEMENTARY SCHOOLS

KENBROOK ELEMENTARY SCHOOL

PLUMBING NEW WORK PLAN - AREA 'B' AND 'C'

PRELIMINARY ☐
DESIGN DEVELOPMENT ☐
CONSTRUCTION ■
FINAL RECORD ☐

DRAWN BY: JRM
CHECKED BY: SVM

REVISIONS:

DATE: 12-15-17

SHEET NO.: M2.2KB

JOB NO.: 171712A

g:\2015\2015-0144-00\Cad\kenbrook es\2015-0144-M2-Pl.1.dwg, M2.2KB, 12/12/2017 2:26:17 PM, Suha A. Matti, _Default.pc3 ,0.09699, Peter Basso Associates Inc.

THE FOLLOWING DIMENSION EQUALS ONE INCH WHEN PRINTED TO SCALE.

KEY PLAN

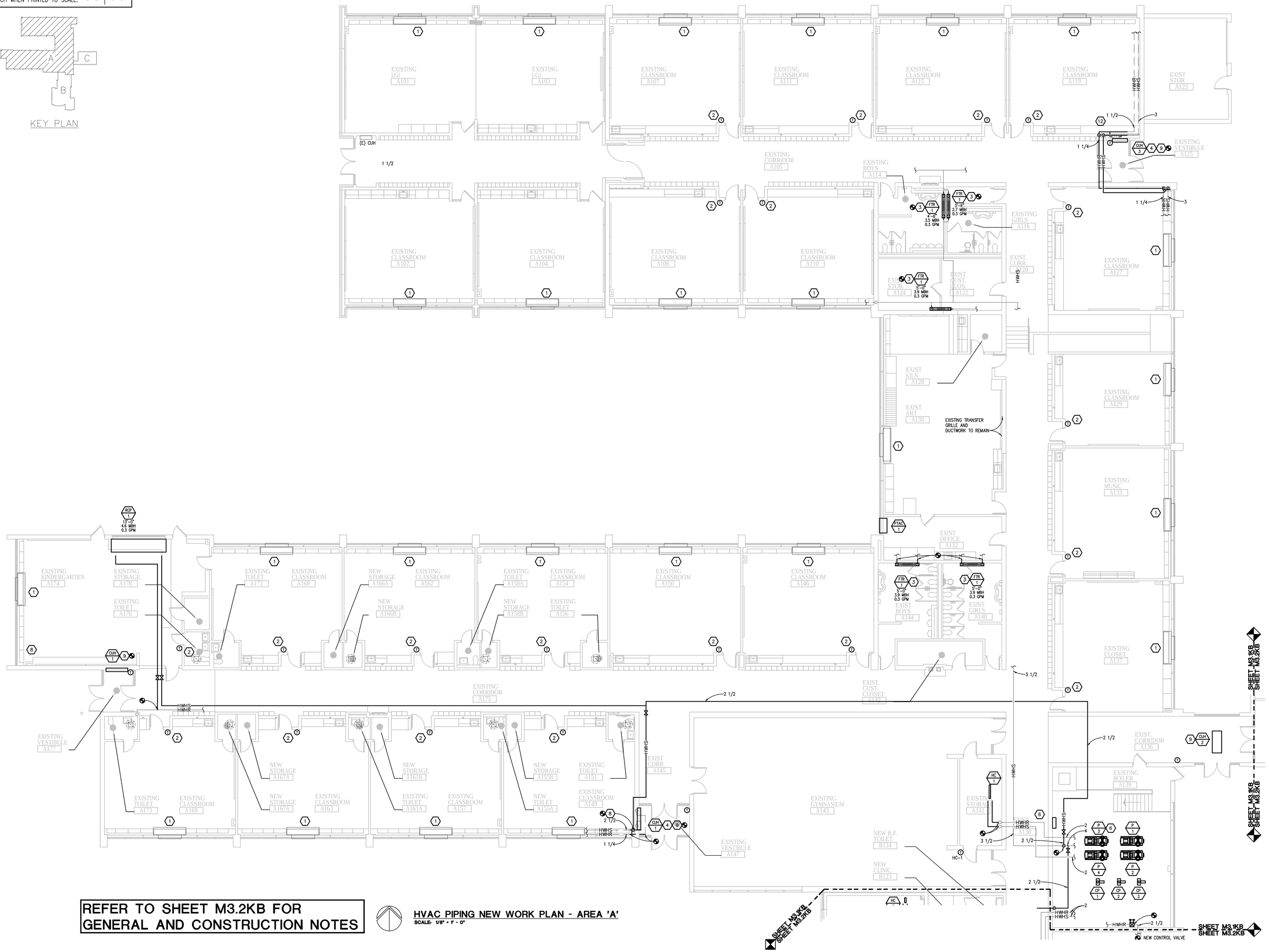

REFER TO SHEET M3.2KB FOR GENERAL AND CONSTRUCTION NOTES

HVAC PIPING NEW WORK PLAN - AREA 'A'

SCALE: 1/8" = 1' - 0"

WAKELY ASSOCIATES, INC.
ARCHITECTS & ENGINEERS

30500 VAN DYKE AVE.
SUITE M-7
WARREN, MICHIGAN, 48093

TEL. 586-573-4100
FAX. 586-573-0822
E-MAIL: WA@WAKELYAIA.COM

Peter Basso Associates Inc
CONSULTING ENGINEERS
5145 Livernois, Suite 100
Troy, Michigan 48098-3276
Tel: 248-879-5668
Fax: 248-879-0007
www.PeterBassoAssociates.com
PBA Project No.: 2015-0144

FARMINGTON PUBLIC SCHOOLS - 2015 BOND
2018 PROJECTS
KENBROOK & BEECHVIEW ELEMENTARY SCHOOLS

KENBROOK ELEMENTARY SCHOOL

HVAC PIPING NEW WORK PLAN - AREA 'A'

PRELIMINARY ☐
DESIGN DEVELOPMENT ☐
CONSTRUCTION ■
FINAL RECORD ☐

DRAWN BY: JRM
CHECKED BY: SVM

REVISIONS:

DATE: 12-15-17

SHEET NO.:

M3.1KB

JOB NO.: 171712A

g:\2015\2015-0144-00\Cad\kenbrook es\2015-0144-M3-HP1.dwg, M3.1KB, 12/12/2017 2:26:31 PM, Suha A. Matti, _Default.pc3 ,0.09699, Peter Basso Associates Inc.

THE FOLLOWING DIMENSION EQUALS ONE INCH WHEN PRINTED TO SCALE.

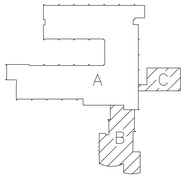

KEY PLAN

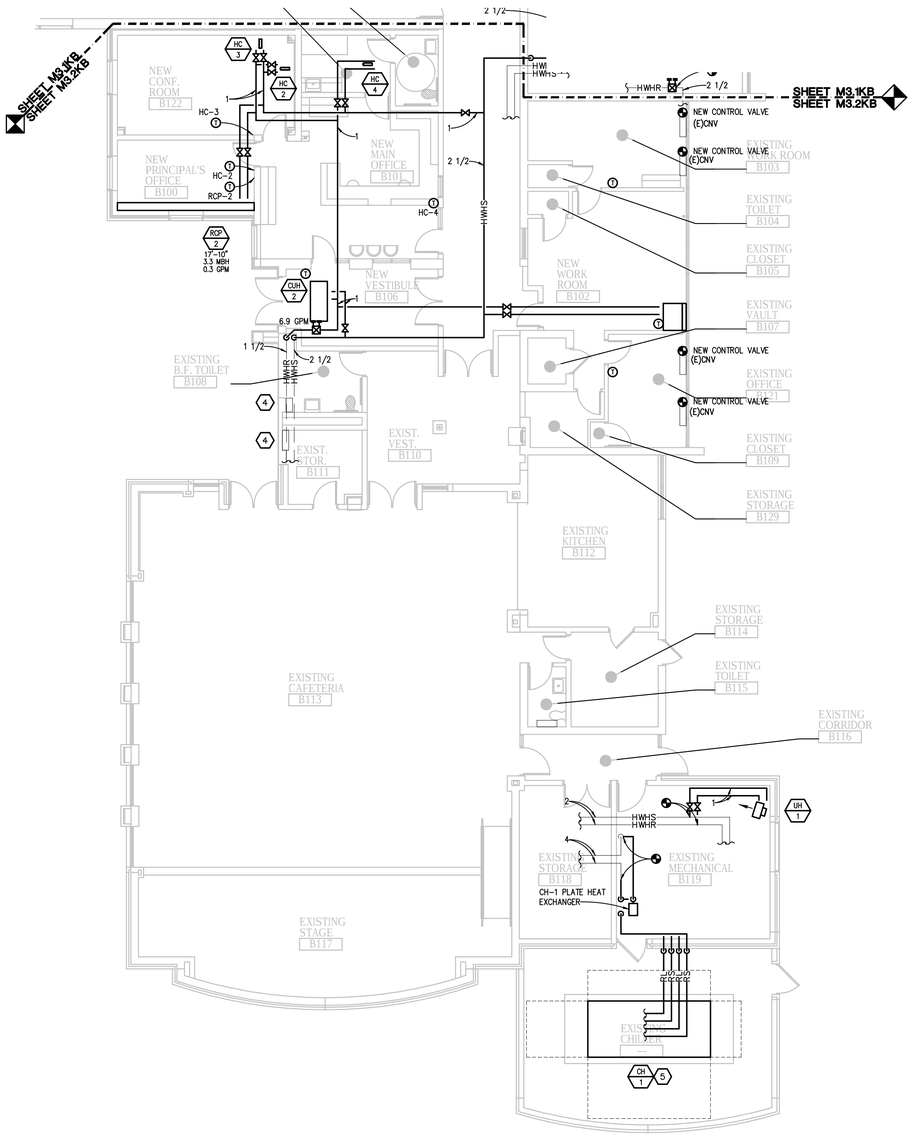

HVAC PIPING NEW WORK PLAN - AREA 'B'

SCALE: 1/8" = 1' - 0"

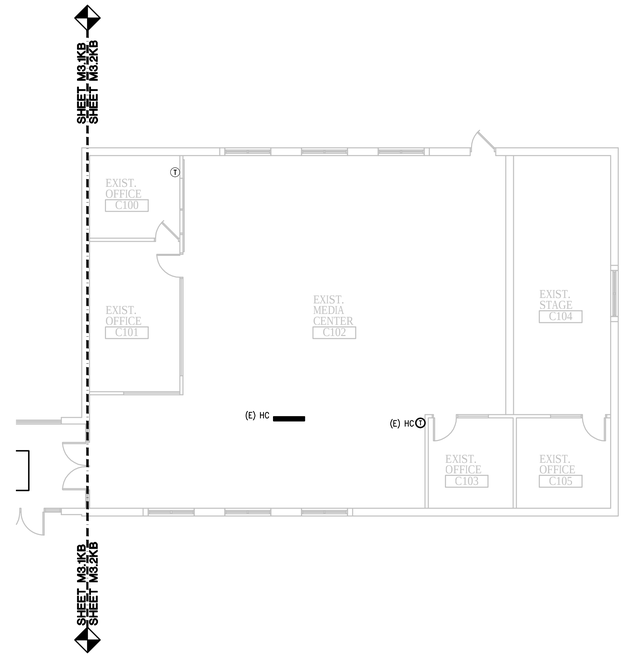

HVAC PIPING NEW WORK PLAN - AREA 'C'

SCALE: 1/8" = 1' - 0"

HVAC PIPING GENERAL NOTES:

1. THESE DRAWINGS ARE DIAGRAMMATIC, AND REPRESENT THE GENERAL INTENT AND ARRANGEMENT OF SYSTEMS. THEY ARE NOT TO BE CONSIDERED FABRICATION/COORDINATION/SHOP DRAWINGS. COORDINATION WITH OTHER TRADES IS REQUIRED. PROVIDE THE ADDITIONAL FITTINGS AND OFFSETS THAT WILL BE REQUIRED TO COMPLETE EACH SYSTEM AND TO AVOID INTERFERENCES WITH ALL OTHER SYSTEMS INCLUDING THE STRUCTURE, SHEET METAL, OTHER PIPING SYSTEMS, ELECTRICAL CONDUITS, BUS DUCTS, CABLE TRAY, LIGHT FIXTURES, ETC. AND/OR OTHER SPACE CONSTRAINTS.
2. INSTALL SYSTEMS SUCH THAT REQUIRED CLEARANCE AND SERVICE ACCESS SPACE IS PROVIDED AROUND ALL MECHANICAL AND ELECTRICAL EQUIPMENT, AND AROUND ANY COMPONENTS WHICH REQUIRE SERVICE ACCESS.
3. PIPING AND DUCTWORK SHALL NOT BE INSTALLED ABOVE ELECTRICAL TRANSFORMERS, SWITCHBOARDS, PANELBOARDS OR MOTOR CONTROL CENTERS.
4. COORDINATE AND PROVIDE ACCESS DOORS WITHIN INACCESSIBLE CEILING, SHAFT, AND CHASE AREAS FOR ALL COMPONENTS WHICH REQUIRE SERVICE ACCESS. REFER TO ARCHITECTURAL DRAWINGS FOR CEILING TYPES.
5. PROVIDE SUPPLEMENTARY STEEL AS REQUIRED FOR THE PROPER SUPPORT OF ALL SYSTEMS.
6. SUBMIT PROPOSED METHODS OF ANCHORING AND GUIDING PIPING SYSTEMS TO STRUCTURAL ENGINEER FOR APPROVAL.
7. COORDINATE LOCATION OF DUCT-MOUNTED HYDRONIC DEVICES WITH SHEET METAL TRADES.
8. BRANCH PIPING SERVING TERMINAL UNIT HEATING COILS OR RADIANT CEILING PANELS SHALL BE 3/4" UNLESS OTHERWISE NOTED. BRANCH PIPING SERVING MORE THAN ONE TERMINAL UNIT HEATING COIL SHALL BE 1" UNLESS OTHERWISE NOTED. BRANCH PIPING SERVING HOT WATER UNIT HEATERS AND CABINET UNIT HEATERS SHALL BE 1" UNLESS OTHERWISE NOTED.
9. MOUNT THERMOSTATS 48" A.F.F., UNLESS OTHERWISE NOTED. LOCATE AS CLOSE AS POSSIBLE TO DOOR WHEN INDICATED NEAR DOOR. COORDINATE EXACT LOCATION WITH ALL OTHER TRADES.

CONSTRUCTION KEY NOTES:

1. ROUTE 1 INCH HOT WATER HEATING SUPPLY AND RETURN IN FALSE BACK OF CABINETS AND UNIT VENTILATORS. PROVIDE NEW 2-WAY HOT WATER HEATING AND 2-WAY CHILLED WATER CONTROL VALVES AND ACTUATORS IN EXISTING UNIT VENTILATOR HOUSING. BRUSH AND VACUUM HEATING AND COOLING COILS, STRAIGHTEN FINS, AND VACUUM CLEAN UNIT VENTILATOR HOUSING. SNAKE EXISTING CONDENSATE PIPING AND PROVIDE NEW COPPER ELBOW ON EXTERIOR TERMINATION.
2. RELOCATED TEMPERATURE SENSOR.
3. INSTALL NEW FIN TUBE RADIATION AT SAME HEIGHT AND CONNECT TO EXISTING HWHS/R PIPING.
4. CONNECT NEW HWHS/R PIPING TO EXISTING HWHS/R IN TRENCH. PROVIDE PIPE ENCLOSURE. REFER TO PIPE ENCLOSURE DETAIL ON SHEET M6.1.
5. INSTALL NEW AIR COOLED CHILLER WITH REMOTE INDOOR EVAPORATOR BUNDLE ON EXISTING CONCRETE PAD.
6. REMOVE AND REPLACE EXISTING BUILDING CONTROLLER WITH NEW JCI FACILITY EXPLORER.
7. NOT USED.
8. ROUTE NEW HOT WATER HEATING SUPPLY PIPE DOWN WALL IN PIPE ENCLOSURE TO EXISTING HOT WATER PIPE IN DEPRESSED TRENCH. COORDINATE WITH ARCHITECTURAL TRADES.
9. CONNECT NEW CABINET UNIT HEATER TO EXISTING HOT WATER PIPING. EXTEND/MODIFY EXISTING PIPING AS REQUIRED TO FACILITATE THE INSTALLATION OF NEW CABINET UNIT HEATER.
10. REFER TO BASE MOUNTED END SUCTION PUMP PIPING DIAGRAM ON SHEET M6.2.
11. REFER TO INLINE FLEXIBLE COUPLING PUMP PIPING DIAGRAM ON SHEET M6.2
12. EXTEND 12x12 TRENCH TO PICK UP NEW HWHS/R PIPING.

WAKELY ASSOCIATES, INC.
ARCHITECTS & ENGINEERS

30500 VAN DYKE AVE.
SUITE M-7
WARREN, MICHIGAN, 48093

TEL. 586-573-4100
FAX. 586-573-0822
E-MAIL: WA@WAKELYAIA.COM

Peter Basso Associates Inc
CONSULTING ENGINEERS
5145 Livernois, Suite 100
Troy, Michigan 48098-3276
Tel: 248-879-5668
Fax: 248-879-0007
www.PeterBassoAssociates.com
PBA Project No.: 2015-0144

FARMINGTON PUBLIC SCHOOLS - 2015 BOND
2018 PROJECTS
KENBROOK & BEECHVIEW ELEMENTARY SCHOOLS

KENBROOK ELEMENTARY SCHOOL

HVAC PIPING NEW WORK PLAN - AREA 'B' AND 'C'

PRELIMINARY ☐
DESIGN DEVELOPMENT ☐
CONSTRUCTION ■
FINAL RECORD ☐

DRAWN BY: JRM
CHECKED BY: SVM

REVISIONS:

DATE: 12-15-17

SHEET NO.: M3.2KB

JOB NO.: 171712A

g:\2015\2015-0144-00\Cad\kenbrook es\2015-0144-M3-HP1.dwg, M3.2KB, 12/12/2017 2:26:33 PM, Suha A. Matti, _Default.pc3 ,0.09699, Peter Basso Associates Inc.

THE FOLLOWING DIMENSION EQUALS ONE INCH WHEN PRINTED TO SCALE.

KEY PLAN

REFER TO SHEET M4.2KB FOR GENERAL AND CONSTRUCTION NOTES

SHEET METAL NEW WORK PLAN - AREA 'A'

SCALE: 1/8" = 1' - 0"

WAKELY ASSOCIATES, INC.
ARCHITECTS & ENGINEERS

30500 VAN DYKE AVE.
SUITE M-7
WARREN, MICHIGAN, 48093

TEL. 586-573-4100
FAX. 586-573-0822
E-MAIL: WA@WAKELYAIA.COM

Peter Basso Associates Inc
CONSULTING ENGINEERS
5145 Livernois, Suite 100
Troy, Michigan 48098-3276
Tel: 248-879-5668
Fax: 248-879-0007
www.PeterBassoAssociates.com
PBA Project No.: 2015-0144

FARMINGTON PUBLIC SCHOOLS - 2015 BOND
2018 PROJECTS
KENBROOK & BEECHVIEW ELEMENTARY SCHOOLS

KENBROOK ELEMENTARY SCHOOL

SHEET METAL NEW WORK PLAN - AREA 'A'

PRELIMINARY ☐
DESIGN DEVELOPMENT ☐
CONSTRUCTION ■
FINAL RECORD ☐

DRAWN BY: JRM
CHECKED BY: SVM

REVISIONS:

DATE: 12-15-17

SHEET NO.: M4.1KB

JOB NO.: 171712A

g:\2015\2015-0144-00\Cad\kenbrook es\2015-0144-M4-SM1.dwg, M4.1KB, 12/12/2017 2:26:50 PM, Suha A. Matti, _Default.pc3 0.09699, Peter Basso Associates Inc.

THE FOLLOWING DIMENSION EQUALS ONE INCH WHEN PRINTED TO SCALE.

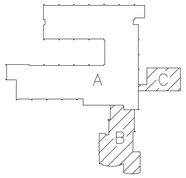

KEY PLAN

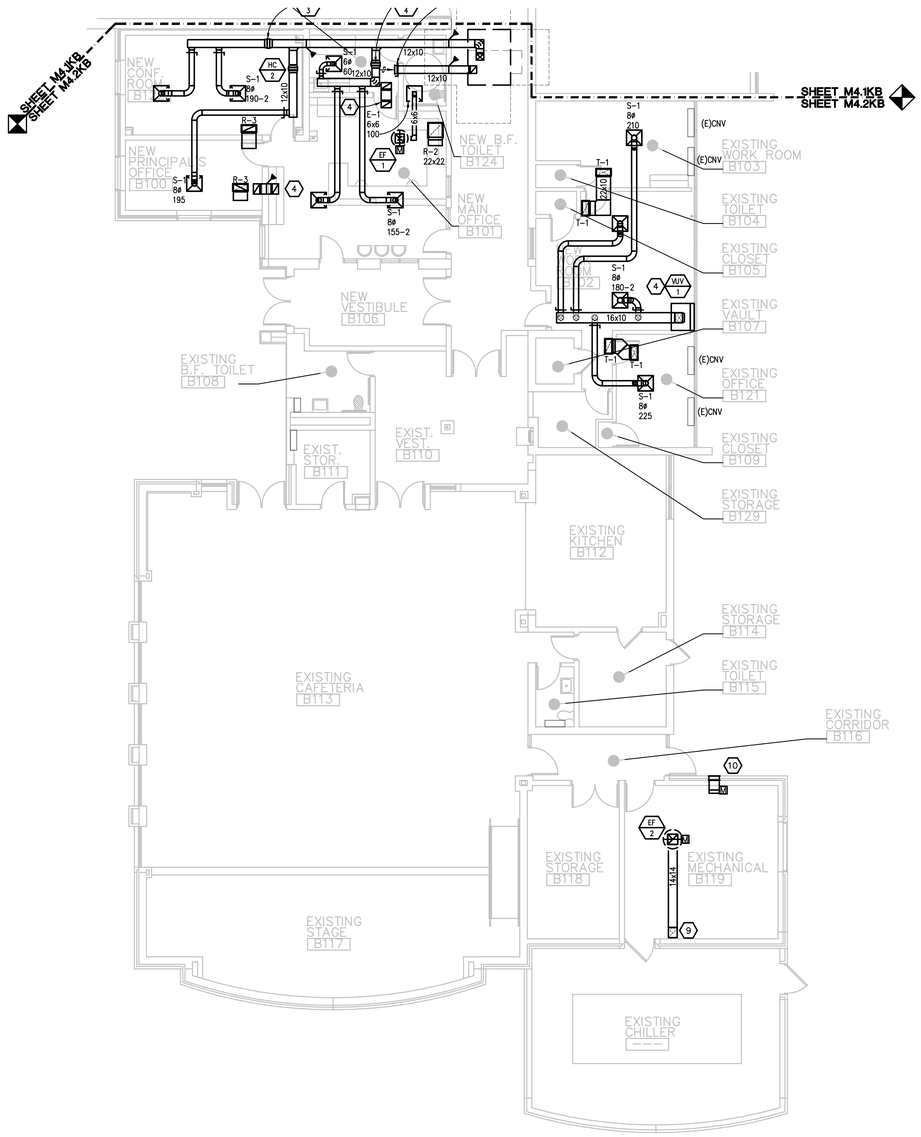

HVAC PIPING NEW WORK PLAN - AREA 'B'

SCALE: 1/8" = 1' - 0"

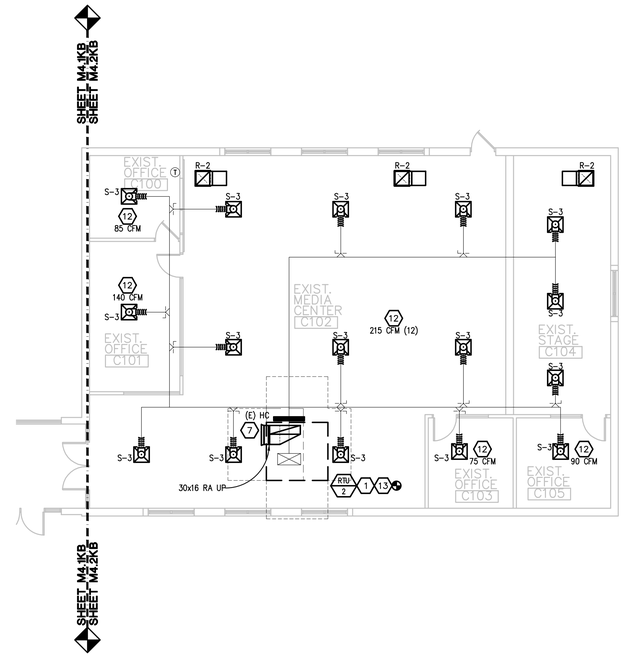

HVAC PIPING NEW WORK PLAN - AREA 'C'

SCALE: 1/8" = 1' - 0"

SHEET METAL GENERAL NOTES:

1. THESE DRAWINGS ARE DIAGRAMMATIC, AND REPRESENT THE GENERAL INTENT AND ARRANGEMENT OF SYSTEMS. THEY ARE NOT TO BE CONSIDERED FABRICATION/COORDINATION/SHOP DRAWINGS. COORDINATION WITH OTHER TRADES IS REQUIRED. PROVIDE THE ADDITIONAL FITTINGS AND OFFSETS THAT WILL BE REQUIRED TO COMPLETE EACH SYSTEM AND TO AVOID INTERFERENCES WITH ALL OTHER SYSTEMS INCLUDING THE STRUCTURE, SHEET METAL, OTHER PIPING SYSTEMS, ELECTRICAL CONDUITS, BUS DUCTS, CABLE TRAY, LIGHT FIXTURES, ETC. AND/OR OTHER SPACE CONSTRAINTS.
2. INSTALL SYSTEMS SUCH THAT REQUIRED CLEARANCE AND SERVICE ACCESS SPACE IS PROVIDED AROUND ALL MECHANICAL AND ELECTRICAL EQUIPMENT, AND AROUND ANY COMPONENTS WHICH REQUIRE SERVICE ACCESS.
3. PIPING AND DUCTWORK SHALL NOT BE INSTALLED ABOVE ELECTRICAL TRANSFORMERS, SWITCHBOARDS, PANELBOARDS OR MOTOR CONTROL CENTERS.
4. COORDINATE AND PROVIDE ACCESS DOORS WITHIN INACCESSIBLE CEILING, SHAFT, AND CHASE AREAS FOR ALL COMPONENTS WHICH REQUIRE SERVICE ACCESS. REFER TO ARCHITECTURAL DRAWINGS FOR CEILING TYPES.
5. PROVIDE SUPPLEMENTARY STEEL AS REQUIRED FOR THE PROPER SUPPORT OF ALL SYSTEMS.
6. REFER TO ARCHITECTURAL REFLECTED CEILING PLANS FOR DIMENSIONED LOCATION OF GRILLES, REGISTERS, AND DIFFUSERS.

CONSTRUCTION KEY NOTES:

1. CONNECT NEW 3,000 CFM RTU TO EXISTING SUPPLY DUCTWORK. PROVIDE CURB ADAPTOR FOR EXISTING CURB.
2. PROVIDE NEW 3,800 CFM RTU. ROUTE NEW DUCTWORK THROUGH MEZZANINE INTO GYMNASIUM.
3. PROVIDE NEW 900 CFM RTU FOR NEW OFFICE.
4. PROVIDE 16x10 TRANSFER DUCT. REFER TO TRANSFER DUCT DETAIL ON SHEET M6.1. ROUTE TRANSFER DUCT HIGH BETWEEN STRUCTURE.
5. PROVIDE 32x8 TRANSFER DUCT ABOVE CORRIDOR CEILING. PROVIDE WITH COMBINATION SMOKE/FIRE DAMPER.
6. BALANCE VOLUME DAMPER TO 845 CFM.
7. PROVIDE BELL MOUTH OPENING. REFER TO BELL MOUTH DETAIL ON SHEET M6.2.
8. DASHED DUCTWORK IS LOCATED ON ROOF. PROVIDE MANUFACTURED DUCTWORK ROOF SUPPORT (TYP.).
9. ROUTE 14x14 EXHAUST DUCTWORK DOWN WALL TO 24" ABOVE FINISHED FLOOR.
10. INTAKE LOUVER TO INSTALLED TIGHT TO UNDERSIDE OF STRUCTURE.
11. PROVIDE NEW EXHAUST GRILLE. CONNECT 10x10 EXHAUST DUCT TO EXISTING DUCTWORK. RE-BALANCE EXISTING FAN AND NEW GRILLE.
12. FIELD VERIFY NECK SIZE PRIOR TO ORDERING. BALANCE SUPPLY DIFFUSERS TO CFM INDICATED.
13. NEW ROOFTOP UNIT. CONTRACTOR SHALL VERIFY AND COORDINATE EXACT LOCATION WITH STRUCTURAL STEEL. PROVIDE MINIMUM 10'-0" FROM THE UNIT INTAKE TO ANY PLUMBING VENTS, EXHAUST FANS OR FLUE STACKS. LOCATE ALL MECHANICAL EQUIPMENT MINIMUM 10'-0" FROM ROOF EDGE OR PROVIDE GUARDS FOR SERVICE. OFFSET PLUMBING VENTS AS REQUIRED.
14. PROVIDE VUV WITH 10" REAR EXTENSION.
15. PROVIDE NEW GRAVITY RELIEF HOOD. RECONNECT TO EXISTING ROOF CURB. PROVIDE ROOF CURB ADAPTOR.

WAKELY ASSOCIATES, INC.
ARCHITECTS & ENGINEERS

30500 VAN DYKE AVE.
SUITE M-7
WARREN, MICHIGAN, 48093

TEL. 586-573-4100
FAX. 586-573-0822
E-MAIL: WA@WAKELYAIA.COM

Peter Basso Associates Inc
CONSULTING ENGINEERS
5145 Livernois, Suite 100
Troy, Michigan 48098-3276
Tel: 248-879-5668
Fax: 248-879-0007
www.PeterBassoAssociates.com
PBA Project No.: 2015-0144

FARMINGTON PUBLIC SCHOOLS - 2015 BOND
2018 PROJECTS
KENBROOK & BEECHVIEW ELEMENTARY SCHOOLS

KENBROOK ELEMENTARY SCHOOL

SHEET METAL NEW WORK PLAN - AREA 'B' AND 'C'

PRELIMINARY ☐
DESIGN DEVELOPMENT ☐
CONSTRUCTION ■
FINAL RECORD ☐

DRAWN BY: JRM
CHECKED BY: SVM

REVISIONS:

DATE: 12-15-17

SHEET NO.:

M4.2KB

JOB NO.: 171712A

g:\2015\2015-0144-00\Cad\kenbrook es\2015-0144-M4-SM1.dwg, M4.2KB, 12/12/2017 2:26:52 PM, Suha A. Matti, _Default.pc3 ,0.09699, Peter Basso Associates Inc.

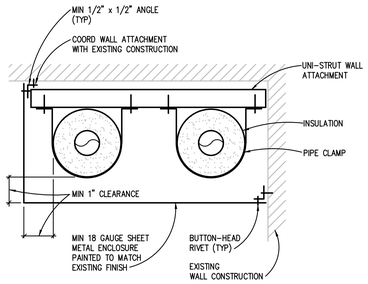

PIPE ENCLOSURE DETAIL
NO SCALE

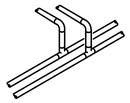

BRANCH CONNECTION OFF TOP

APPLIES TO THE FOLLOWING SYSTEMS:
DOMESTIC WATER
STEAM & CONDENSATE
LABORATORY GASES
LABORATORY VACUUM
COMPRESSED AIR
NATURAL GAS

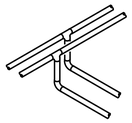

BRANCH CONNECTION OFF BOTTOM

APPLIES TO THE FOLLOWING SYSTEMS:
HOT WATER HEATING
CHILLED WATER
CONDENSER WATER
ENERGY RECOVERY
PROCESS COOLING WATER

NOTE: BOTTOM AS INDICATED OR SIDE CONNECTION IS ACCEPTABLE. CONNECTION ABOVE CENTERLINE OF MAINS IS NOT ACCEPTABLE.

TYPICAL BRANCH TAKE-OFF CONNECTION PIPING DETAIL
NO SCALE

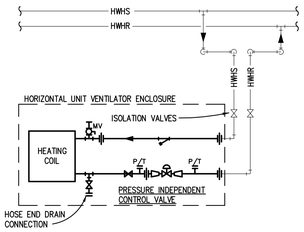

UNIT VENTILATOR WITH 2-WAY HOT WATER CONTROL VALVE PIPING DIAGRAM
NO SCALE

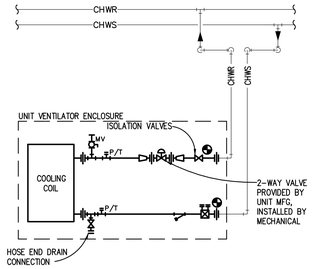

UNIT VENTILATOR WITH 2-WAY CHILLED WATER CONTROL VALVE PIPING DIAGRAM
NO SCALE

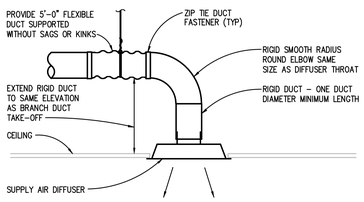

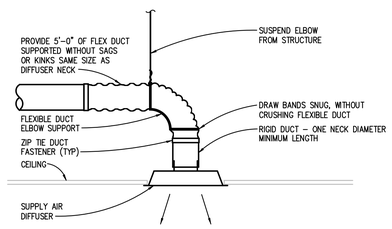

ROUND NECK SUPPLY AIR DIFFUSER DETAIL
NO SCALE

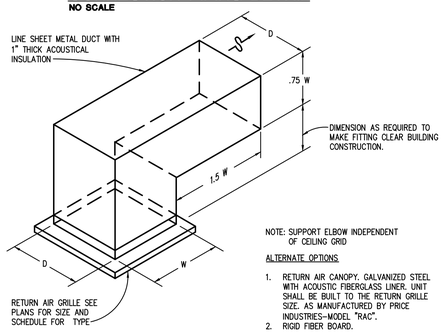

NOTE: SUPPORT ELBOW INDEPENDENT OF CEILING GRID

ALTERNATE OPTIONS

1. RETURN AIR CANOPY. GALVANIZED STEEL WITH ACOUSTIC FIBERGLASS LINER. UNIT SHALL BE BUILT TO THE RETURN GRILLE SIZE. AS MANUFACTURED BY PRICE INDUSTRIES-MODEL "RAC".
2. RIGID FIBER BOARD.

PLENUM RETURN AIR GRILLE DETAIL
NO SCALE

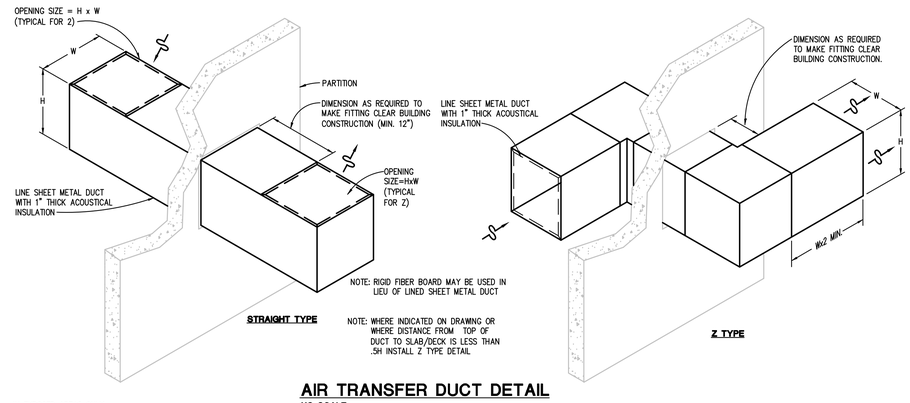

NOTE: RIGID FIBER BOARD MAY BE USED IN LIEU OF LINED SHEET METAL DUCT

STRAIGHT TYPE

NOTE: WHERE INDICATED ON DRAWING OR WHERE DISTANCE FROM TOP OF DUCT TO SLAB/DECK IS LESS THAN .5H INSTALL Z TYPE DETAIL

Z TYPE

AIR TRANSFER DUCT DETAIL
NO SCALE

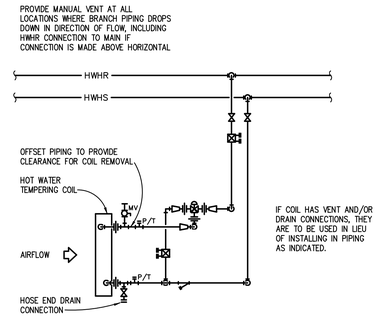

HOT WATER TEMPERING COIL WITH THREE-WAY CONTROL VALVE PIPING DIAGRAM
NO SCALE

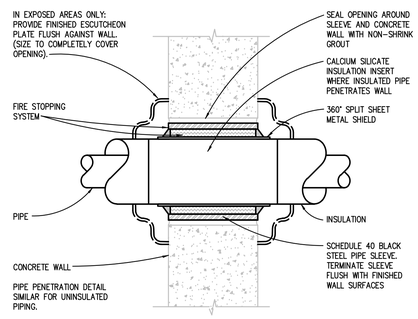

DETAIL INDICATES THE INSTALLATION REQUIREMENTS FOR A FIRE RATED ASSEMBLY. FOR A NON-FIRE RATED ASSEMBLY PACK SLEEVED OPENING WITH INSULATION MATERIAL AND CAULK WITH NON-HARDENING SEALANT.

FIRE RATED AND NON-FIRE RATED POURED CONCRETE OR BLOCK WALL PIPE PENETRATION DETAIL
NO SCALE

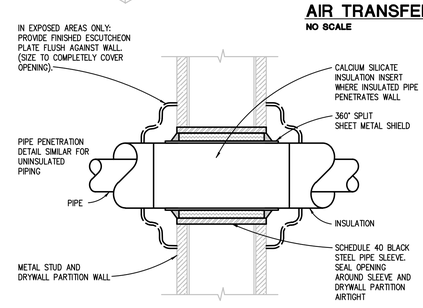

DETAIL INDICATES THE INSTALLATION REQUIREMENTS FOR A FIRE RATED ASSEMBLY. FOR A NON-FIRE RATED ASSEMBLY PACK SLEEVED OPENING WITH INSULATION MATERIAL AND CAULK WITH NON-HARDENING SEALANT.

FIRE RATED AND NON-FIRE RATED METAL STUD AND DRYWALL PARTITION WALL PIPE PENETRATION DETAIL
NO SCALE

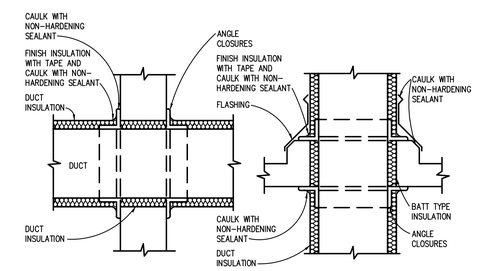

VERTICAL OR HORIZONTAL (NON FIRE RATED ASSEMBLY) DUCT PENETRATION DETAIL
NO SCALE

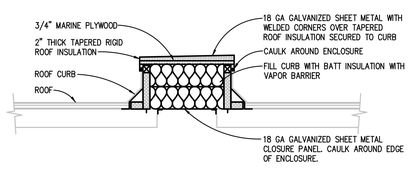

NOTE:
1. FASTEN TOP CLOSURE, WITH SCREWS THROUGH SIDE.

ROOF CURB CAP DETAIL
NO SCALE

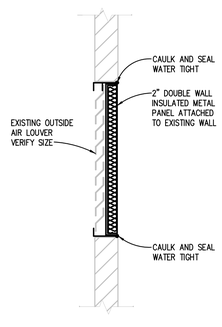

EXISTING EXTERIOR LOUVER AND/OR GRILLE CLOSURE DETAIL
NO SCALE

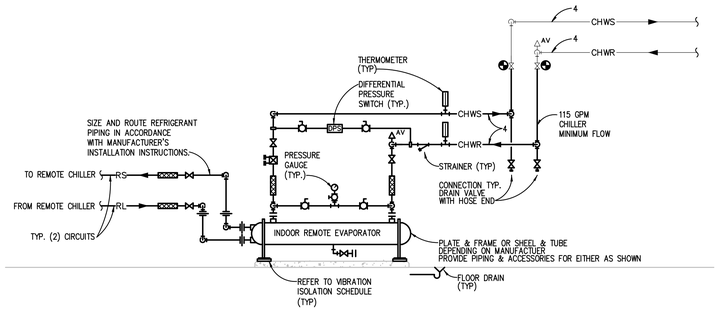

REMOTE DX EVAPORATOR PIPING DIAGRAM
NO SCALE

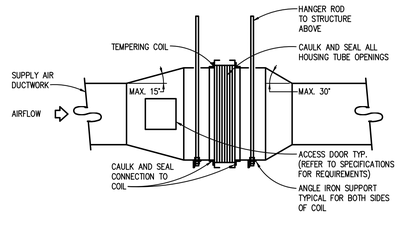

DUCT MOUNTED TEMPERING COIL INSTALLATION DETAIL
NO SCALE

WA
WAKELY ASSOCIATES, INC.
ARCHITECTS & ENGINEERS
30500 VAN DYKE AVE.
SUITE M-7
WARREN, MICHIGAN, 48093
TEL. 586-573-4100
FAX. 586-573-0822
E-MAIL: WA@WAKELYAIA.COM

Peter Basso Associates Inc
CONSULTING ENGINEERS
5145 Livernois, Suite 100
Troy, Michigan 48098-3276
Tel: 248-879-5668
Fax: 248-879-0007
www.PeterBassoAssociates.com
PBA Project No.: 2015-0144

FARMINGTON PUBLIC SCHOOLS - 2015 BOND
2018 PROJECTS
KENBROOK & BEECHVIEW ELEMENTARY SCHOOLS

KENBROOK ELEMENTARY SCHOOL

MECHANICAL DETAILS

PRELIMINARY ☐
DESIGN DEVELOPMENT ☐
CONSTRUCTION ■
FINAL RECORD ☐

DRAWN BY: JRM
CHECKED BY: SVM

REVISIONS:

DATE: 12-15-17

SHEET NO.:

M6.1KB

JOB NO.: 171712A

g:\2015\2015-0144-00\Cad\kenbrook es\2015-0144-M6-DT.dwg, M6.1, 12/12/2017 2:27:02 PM, Suha A. Matti, _Default.pc3 ,0.09699, Peter Basso Associates Inc.

TRAP DIMENSION TABLE

TYPE OF SYSTEM	S.P. AT COIL DRAIN PAN (IN.) (NOTE A)	DIMENSION "A" (INCHES) MIN.	DIMENSION "B" (INCHES)	DIMENSION "C" (INCHES) (TRAP SEAL)	DIMENSION "D" (INCHES)	DIMENSION "E" (INCHES)	DIMENSION "F" (INCHES) DRAIN PIPE SIZE (INCHES)			
							1 1/2	2	2 1/2, 3	4
DRAW THROUGH	−5.1 TO −6	5.0	5.0	2	6	2	13.0	14.0	15.0	16.0
	−4.1 TO −5	4.5	4.5	2	5	2	12.0	13.0	14.0	15.0
	−3.1 TO −4	4.0	4.0	2	4	2	11.0	12.0	13.0	14.0
	−2.1 TO −3	3.5	3.5	2	3	2	10.0	11.0	12.0	13.0
	UP TO −2	3.0	3.0	2	2	2	9.0	10.0	11.0	12.0
BLOW THROUGH	UP TO +2	4.0	2.0	2	2	4	9.0	10.0	11.0	12.0
	+2.1 TO +3	5.0	2.0	2	3	5	10.0	11.0	12.0	13.0
	+3.1 TO +4	6.0	2.0	2	4	6	11.0	12.0	13.0	14.0
	+4.1 TO +5	7.0	2.0	2	5	7	12.0	13.0	14.0	15.0
	+5.1 TO +6	8.0	2.0	2	6	8	13.0	14.0	15.0	16.0

NOTES: A. REFER TO ROOFTOP AIR HANDLING UNIT (COMMERCIAL, UNITARY, MODULAR) SCHEDULE FOR (−) OR (+) STATIC PRESSURE AT COIL DRAIN PAN.
B. ENERGY RECOVERY UNIT HEAT EXCHANGER CONDENSATE PAN TRAP PIPING OUTSIDE CASING SHALL BE INSULATED AND HEAT TRACED.
C. DIMENSION "C" IS MIN: 3" FOR UP TO 1 1/2" DRAIN PIPE
4" FOR 2" DRAIN PIPE
5" FOR 2 1/2" OR 3" DRAIN PIPE
6" FOR 4" DRAIN PIPE
D. PROVIDE ROOF CURB WITH ADEQUATE HEIGHT TO MEET DIMENSION "F"

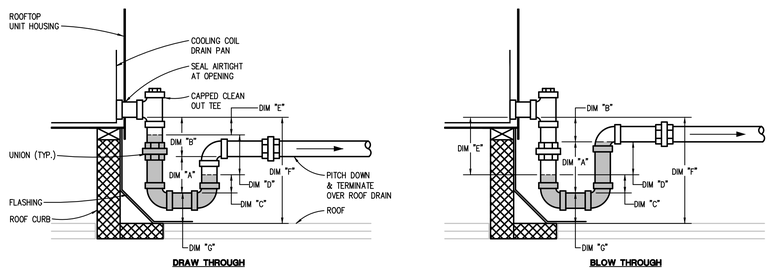

ROOFTOP AIR HANDLING UNIT CONDENSATE DRAIN PAN TRAP DETAIL
NO SCALE

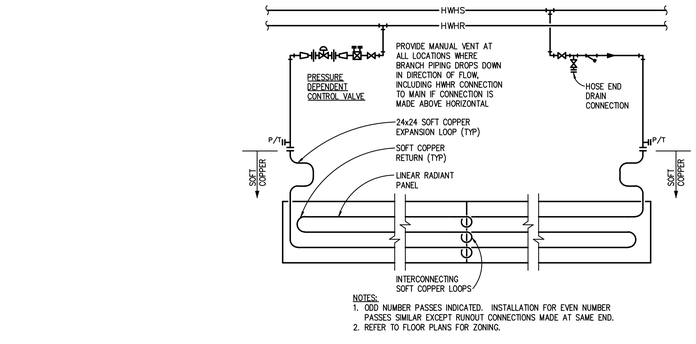

NOTES:
1. ODD NUMBER PASSES INDICATED. INSTALLATION FOR EVEN NUMBER PASSES SIMILAR EXCEPT RUNOUT CONNECTIONS MADE AT SAME END.
2. REFER TO FLOOR PLANS FOR ZONING.

END FEED LINEAR RADIANT CEILING PANEL PIPING DIAGRAM
NO SCALE

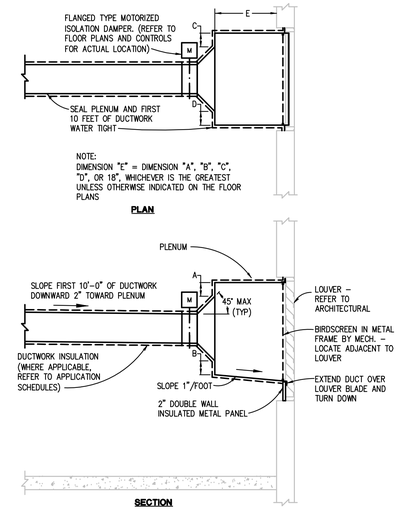

OUTDOOR AIR INTAKE OR EXHAUST/RELIEF PLENUM DETAIL
NO SCALE

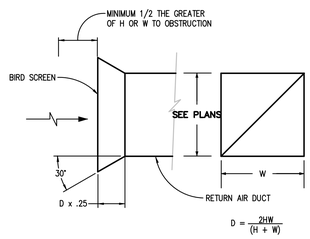

BELLMOUTH DETAIL
NO SCALE

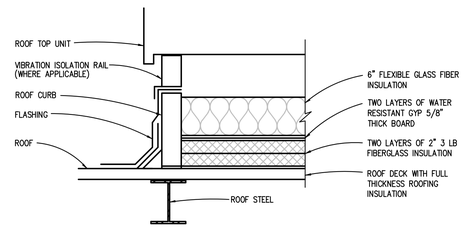

NOTE: ALL DUCT, PIPING, OR ELECTRICAL CONNECTIONS TO UNIT BELOW CURB SHALL HAVE FLEXIBLE CONNECTIONS. CUT INSULATION, GYP BOARD, ROOFING INSULATION, AND METAL DECKING PENETRATIONS TIGHT TO ITEM PENETRATING ROOF. PACK ALL PENETRATION OPENINGS WITH FLEXIBLE GLASS FIBER.

ROOF TOP UNIT CURB DETAIL
NO SCALE

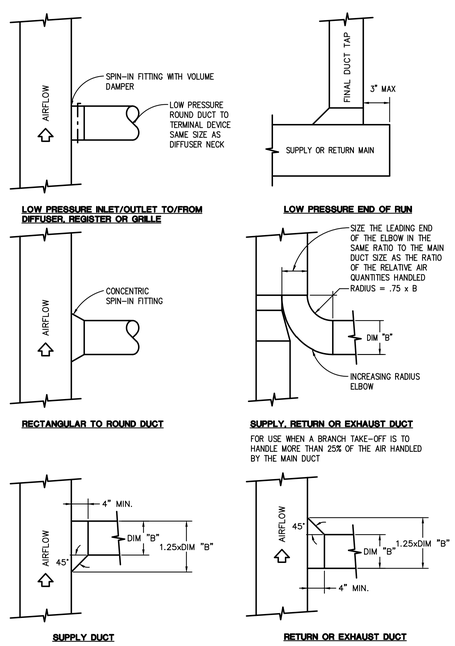

RECTANGULAR DUCT BRANCH TAKE-OFF DETAILS
NO SCALE

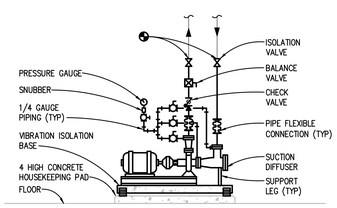

BASE MOUNTED END SUCTION PUMP PIPING DIAGRAM
NO SCALE

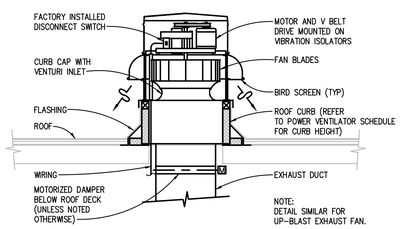

ROOF MOUNTED POWER VENTILATOR EXHAUST FAN DETAIL
NO SCALE

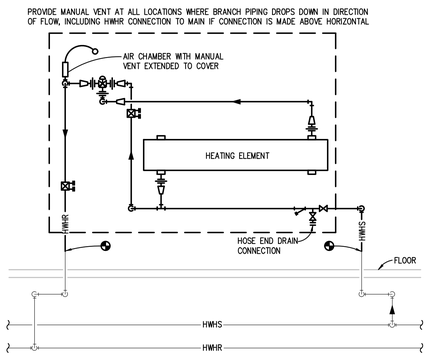

UPFEED CONV. OR CUH WITH THREE WAY CONTROL VALVE PIPING DIAGRAM
NO SCALE

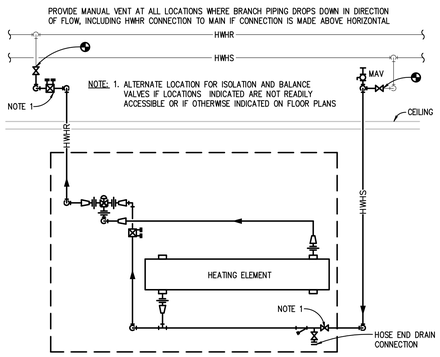

DOWNFEED CONV. OR CUH WITH THREE WAY CONTROL VALVE PIPING DIAGRAM
NO SCALE

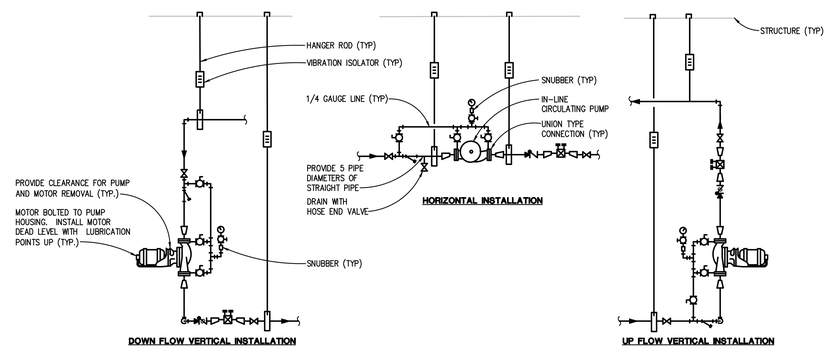

IN-LINE FLEXIBLE COUPLING (BELL AND GOSSETT SERIES 60) CIRCULATING PUMP PIPING DIAGRAM
NO SCALE

WA
WAKELY ASSOCIATES, INC.
ARCHITECTS & ENGINEERS
30500 VAN DYKE AVE.
SUITE M-7
WARREN, MICHIGAN, 48093
TEL. 586-573-4100
FAX. 586-573-0822
E-MAIL: WA@WAKELYAIA.COM
Peter Basso Associates Inc
CONSULTING ENGINEERS
5145 Livernois, Suite 100
Troy, Michigan 48098-3276
Tel: 248-879-5668
Fax: 248-879-0007
www.PeterBassoAssoc-ates.com
PBA Project No.: 2015-0144

FARMINGTON PUBLIC SCHOOLS - 2015 BOND
2018 PROJECTS
KENBROOK & BEECHVIEW ELEMENTARY SCHOOLS

KENBROOK ELEMENTARY SCHOOL
MECHANICAL DETAILS

PRELIMINARY ☐
DESIGN DEVELOPMENT ☐
CONSTRUCTION ■
FINAL RECORD ☐

DRAWN BY: JRM
CHECKED BY: SVM

REVISIONS:

DATE: 12-15-17
SHEET NO.:
M6.2KB
JOB NO.: 171712A

g:\2015\2015-0144-00\Cad\kenbrook es\2015-0144-M6-DT.dwg, M6.2, 12/12/2017 2:27:04 PM, Suha A. Matti, _Default.pc3 .0.09699, Peter Basso Associates Inc.

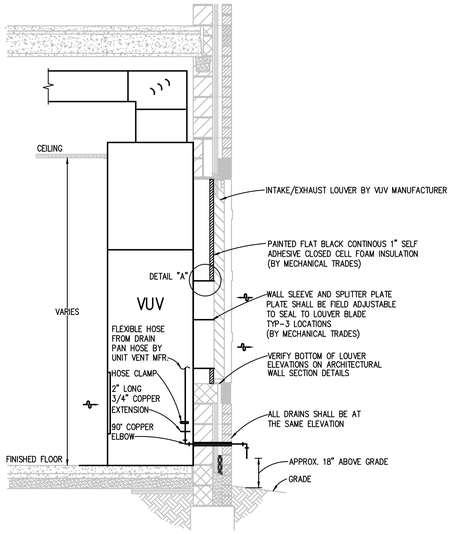

VERTICAL UNIT VENTILATOR SECTION
VUV/LOUVER DETAIL
NO SCALE
(TYPICAL UNLESS OTHERWISE NOTED)

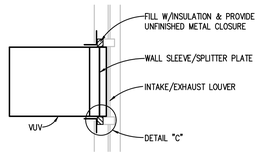

VUV ROOM CENTER ORIENTATION

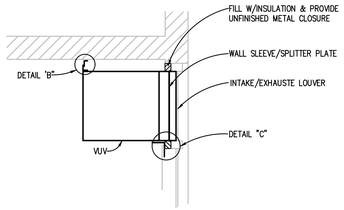

VUV ROOM CORNER ORIENTATION

VERTICAL UNIT VENTILATOR
PLAN VIEW DETAILS
NO SCALE

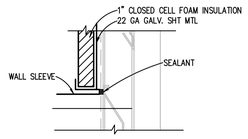

DETAIL "A"
TYPICAL ALL EDGES

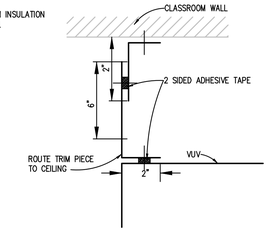

DETAIL "B"

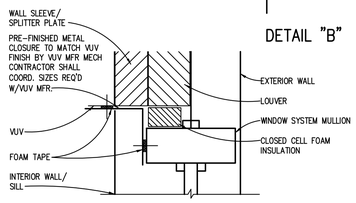

DETAIL "C"

NOTES

SECURELY FASTEN PRE-FINISHED METAL CLOSURE TO VUV CABINET & WINDOW MULLION WITH BUTTON HEAD SCREWS & SEAL W/FOAM TAPE.

WAKELY ASSOCIATES, INC.
ARCHITECTS & ENGINEERS

30500 VAN DYKE AVE.
SUITE M-7
WARREN, MICHIGAN, 48093

TEL. 586-573-4100
FAX. 586-573-0822
E-MAIL: WA@WAKELYAIA.COM

Peter Basso Associates Inc
CONSULTING ENGINEERS
5145 Livernois, Suite 100
Troy, Michigan 48098-3276
Tel: 248-879-5668
Fax: 248-879-0007
www.PeterBassoAssociates.com
PBA Project No.: 2015-0144

FARMINGTON PUBLIC SCHOOLS - 2015 BOND
2018 PROJECTS
KENBROOK & BEECHVIEW ELEMENTARY SCHOOLS

KENBROOK ELEMENTARY SCHOOL

MECHANICAL DETAILS

PRELIMINARY ☐
DESIGN DEVELOPMENT ☐
CONSTRUCTION ■
FINAL RECORD ☐

DRAWN BY: JRM
CHECKED BY: SVM

REVISIONS:

DATE: 12-15-17

SHEET NO.:

M6.3KB

JOB NO.: 171712A

g:\2015\2015-0144-00\Cad\kenbrook es\2015-0144-M6-DT.dwg, M6.3, 12/12/2017 2:27:05 PM, Suha A. Matti, _Default.pc3 ,0.09699, Peter Basso Associates Inc.

PLUMBING PIPING & VALVE APPLICATION SCHEDULE

	MATERIAL															PRESSURE CONNECTIONS												GRAVITY DWV CONNECTIONS					ISOLATION VALVES					
PIPE SIZE (INCHES)	SOFT COPPER TYPE K	HARD COPPER TYPE L	HARD COPPER TYPE M	CARBON STEEL (SCHED. 40)	CARBON STEEL (STD.)	GALV. STEEL (SCHED. 40)	PEX	PE PIPE	PE SHEATHED CARBON STEEL PIPE	CSST	NO-HUB CISP	PVC TYPE DWV	PP DRAINAGE PIPE	COPPER TYPE DWV	DUCTILE IRON PIPE	SOLDERED	BRAZED	WELDED	THREADED	FLANGED	GROOVED	INSERT & CRIMP	FUSION	PRESSURE-SEAL	MECHANICALLY-FORMED TEE	MECHANICAL JOINT	PUSH-ON-JOINT	SOLVENT WELDED	SOLDERED	FUSION	CISPI HUBLESS	HEAVY-DUTY HUBLESS	BALL	AGA BALL	GENERAL SERVICE BUTTERFLY	LUBRICATED PLUG	GATE	KEYED NOTES
ABOVEGROUND DOMESTIC WATER (POTABLE AND NON-POTABLE) ON DISTRIBUTION SIDE OF METER - MIN. WORKING PRESS. & TEMP.: 125 PSIG AT 200 DEG F																																						
UP TO 4		X														X	X			X	X			X	X								X		X			A
ABOVEGROUND SANITARY WASTE & VENT - MIN. WORKING PRESS.: 10-FOOT HEAD OF WATER																																						
1-1/2 TO 15											X																				X							
UNDERGROUND SANITARY WASTE & VENT - MIN. WORKING PRESS.: 10-FOOT HEAD OF WATER																																						
3 TO 12											X																					X						
3 TO 12												X																X										

GENERAL NOTES

1. 'X' INDICATES ACCEPTABLE SELECTION. IF MORE THAN ONE SELECTION IS INDICATED FOR A PIPING SYSTEM, CONTRACTOR MAY SELECT FROM THOSE INDICATED SELECTIONS.
2. DISSIMILAR-METAL PIPING JOINTS: CONSTRUCT JOINTS USING DIELECTRIC FITTINGS COMPATIBLE WITH BOTH PIPING MATERIALS.
   a. NPS 2 AND SMALLER: USE DIELECTRIC NIPPLE/WATERWAY.
   b. NPS 2-1/2 AND LARGER: USE DIELECTRIC FLANGE KITS.
3. USE UNIONS OR FLANGES AT VALVE AND EQUIPMENT CONNECTIONS.
4. PLUMBING EQUIPMENT DRAINS, VENTS, SAFETY VALVE PIPING, BLOWDOWN PIPING AND THE LIKE SHALL BE SAME PIPING MATERIAL AS ASSOCIATED PIPING SYSTEM.
5. GROOVED END VALVES MAY BE USED WITH GROOVED PIPING.

KEYED NOTES

A. GROOVED AND PRESSURE SEALED FITTINGS, JOINTS, AND COUPLINGS, IF INDICATED AS AN ACCEPTABLE SELECTION, MAY BE USED IN ACCESSIBLE LOCATIONS ONLY FOR THIS PIPING SYSTEM.
B. JOINTS ARE NOT PERMITTED ON UNDERGROUND WATER PIPING.
C. USE CAST IRON DRAINAGE PATTERN (DURHAM) FITTINGS.
D. INSTALL IN CONTAINMENT JACKET, REFER TO SPECIFICATIONS.
E. USE STEEL WELDING FITTINGS AND WELDED JOINTS IN PLENUM CEILINGS. VALVES, FLANGES, OR UNIONS ARE PROHIBITED.
F. NO JOINTS ALLOWED UNDERGROUND.

ABOVEGROUND HVAC PIPING & VALVE APPLICATION SCHEDULE

	MATERIAL							CONNECTION								ISOLATION VALVES				
PIPE SIZE (INCHES)	SOFT COPPER TYPE K	HARD COPPER TYPE L	HARD COPPER TYPE M	CARBON STEEL (SCHED. 40)	CARBON STEEL (SCHED. 80)	CARBON STEEL (STD.)	COPPER TYPE DWV	SOLDERED	BRAZED	WELDED	THREADED	FLANGED	GROOVED	PRESSURE SEAL	MECHANICALLY FORMED TEE	BALL	GENERAL SERVICE BUTTERFLY	HI-PERF BUTTERFLY	GATE	KEYED NOTES
CHILLED WATER SUPPLY & RETURN - MIN. WORKING PRESS. & TEMP.: 125 PSIG AT 200 DEG F																				
UP TO 2				X							X					X				
UP TO 2		X						X	X					X	X	X				
2-1/2 TO 4				X						X		X	X				X			A
2-1/2 TO 4		X						X	X				X	X	X		X			A
HEATING HOT WATER SUPPLY & RETURN - MIN. WORKING PRESS. & TEMP.: 125 PSIG AT 200 DEG F																				
UP TO 2		X						X	X					X	X	X				
2-1/2 TO 4				X						X		X	X				X			D

GENERAL NOTES

1. 'X' INDICATES ACCEPTABLE SELECTION. IF MORE THAN ONE SELECTION IS INDICATED FOR A PIPING SYSTEM, CONTRACTOR MAY SELECT FROM THOSE INDICATED SELECTIONS.
2. DISSIMILAR-METAL PIPING JOINTS: CONSTRUCT JOINTS USING DIELECTRIC FITTINGS COMPATIBLE WITH BOTH PIPING MATERIALS. IF A BRONZE VALVE CONNECTS THE DISSIMILAR METALS NO FURTHER DIELECTRIC ISOLATION IS REQUIRED.
   a. NPS 2 AND SMALLER: USE BRASS COUPLING, NIPPLE, OR UNION.
   b. NPS 2-1/2 AND LARGER: USE DIELECTRIC FLANGE KITS.
3. USE UNIONS OR FLANGES AT VALVE AND EQUIPMENT CONNECTIONS.
4. HVAC EQUIPMENT DRAINS, VENTS, SAFETY VALVE PIPING, BLOWDOWN PIPING AND THE LIKE SHALL BE SAME PIPING MATERIAL AS ASSOCIATED PIPING SYSTEM.
5. GROOVED END VALVES MAY BE USED WITH GROOVED PIPING.

KEYED NOTES

A. GROOVED FITTINGS, JOINTS, AND COUPLINGS, IF INDICATED AS AN ACCEPTABLE SELECTION, MAY BE USED IN ACCESSIBLE LOCATIONS FOR THIS PIPING SYSTEM ONLY.
B. BALL VALVE WITH 250 PSIG STEAM TRIM.
C. BALL VALVE WITH 150 PSIG STEAM TRIM.
D. GROOVED FITTINGS, JOINTS AND COUPLINGS MAY BE USED IN MECHANICAL ROOMS ONLY.

DUCT SYSTEM APPLICATION SCHEDULE

	DUCT MATERIAL																	
AIR SYSTEMS	G90 GALV. SHEET METAL	DOUBLE-WALL LINED G90 GALV. SHEET METAL (SOLID INNER WALL)	DOUBLE-WALL LINED G90 GALV. SHEET METAL (PERF. INNER WALL)	G90 GALV. SHEET METAL WITH 1-INCH LINING	GALVANNEALED SHEET METAL	ALUMINUM	TYPE 304 STAINLESS STEEL	TYPE 316 STAINLESS STEEL	PVC COATED GALV. SHEET METAL (4X1)	PVC COATED GALV. SHEET METAL (1X4)	PVC COATED GALV. SHEET METAL (4X4)	16 GA. CARBON STEEL	ZERO-CLEARANCE PREFABRICATED RANGE HOOD EXHAUST DUCT	FABRIC	DESIGN PRESSURE CLASS (INCHES WG)	SEAL CLASS	MAX. ALLOWABLE LEAKAGE RATE (PERCENT)	KEYED NOTES
SUPPLY AIR WITHOUT TERMINAL UNITS	X														+2	A	5	
RETURN AIR WITHOUT TERMINAL UNITS	X														-2	A	5	
EXHAUST AIR WITHOUT TERMINAL UNITS	X														-2	A	5	

GENERAL NOTES

1. 'X' INDICATES ACCEPTABLE SELECTION. IF MORE THAN ONE SELECTION IS INDICATED FOR A DUCT SYSTEM, CONTRACTOR MAY SELECT FROM THOSE INDICATED SELECTIONS.
2. 4 X 1 PVC-COATED GALVANIZED STEEL: FACTORY-APPLIED PVC COATINGS SHALL BE 4 MILS (0.10 MM) THICK ON EXTERIOR SHEET METAL SURFACES OF DUCTS AND FITTINGS EXPOSED TO CORROSIVE CONDITIONS AND MINIMUM 1 MIL (0.025 MM) THICK ON INTERIOR SURFACES.
3. 1 X 4 (4 X 1 REVERSE COATED) PVC-COATED GALVANIZED STEEL: FACTORY-APPLIED PVC COATINGS SHALL BE 4 MILS (0.10 MM) THICK ON INTERIOR SHEET METAL SURFACES OF DUCTS AND FITTINGS EXPOSED TO CORROSIVE CONDITIONS AND MINIMUM 1 MIL (0.025 MM) THICK ON EXTERIOR SURFACES.
4. 4 X 4 PVC-COATED GALVANIZED STEEL: FACTORY-APPLIED PVC COATINGS SHALL BE 4 MILS (0.10 MM) THICK ON SHEET METAL SURFACES OF DUCTS AND FITTINGS EXPOSED TO CORROSIVE CONDITIONS AND 4 MILS (0.10 MM) THICK ON OPPOSITE SURFACES.

KEYED NOTES

A. SCREWS, DAMPERS, OR PROJECTIONS OF ANY TYPE ON INTERIOR OF DUCT SURFACE ARE PROHIBITED.
B. DUCT SHALL BE LINED WITHIN 25 FEET UPSTREAM OF FANS.
C. ALL WELDED CONSTRUCTION.

ABOVEGROUND PLUMBING PIPE & ACCESSORY INSULATION APPLICATION SCHEDULE

	INSULATION MATERIAL & THICKNESS (INCHES)							FIELD-APPLIED JACKET MATERIAL						
	FLEXIBLE ELASTOMERIC	FIBERGLASS	MINERAL WOOL	POLYISOCYANURATE	PHENOLIC	CELLULAR GLASS	CALCIUM SILICATE	ALUMINUM	STAINLESS STEEL	PVC	SELF-ADHESIVE (FOR OUTDOOR APPLICATIONS)	PVDC (INDOOR)	PVDC (OUTDOOR)	KEYED NOTES
INDOOR PIPE SYSTEM AND SIZE (INCHES)														
DOMESTIC COLD WATER	1	1						X		X				A
DOMESTIC HOT WATER SUPPLY & RETURN	1	1						X		X				A

UNLESS OTHERWISE INDICATED OR SCHEDULED, DO NOT INSULATE THE FOLLOWING:
- FIRE SUPPRESSION PIPING
- UNDERGROUND PIPING
- LABORATORY GAS AND VACUUM PIPING
- MEDICAL GAS AND VACUUM PIPING
- FUEL GAS PIPING
- FUEL OIL PIPING

GENERAL NOTES

1. 'X' OR THICKNESS IN INCHES INDICATES ACCEPTABLE SELECTION. IF MORE THAN ONE SELECTION IS INDICATED FOR A SYSTEM, CONTRACTOR MAY SELECT FROM THOSE INDICATED SELECTIONS.
2. INSULATE PIPING WITHIN AIR HANDLING EQUIPMENT THE SAME AS INDOOR PIPING. PROVIDE ALUMINUM OR STAINLESS STEEL JACKET.

KEYED NOTES

A. PROVIDE FIELD APPLIED JACKET FOR PIPING EXPOSED IN EQUIPMENT ROOMS, STORAGE ROOMS, JANITORS CLOSETS, RECEIVING ROOMS, TEST AREAS, CIRCULATION AREAS AND SUCH AREAS SUBJECT TO DAMAGE, WITHIN 10 FEET (3 METERS) OF FINISHED FLOOR.
B. PROVIDE MANUFACTURER'S RECOMMENDED PROTECTIVE COATING FOR FLEXIBLE ELASTOMERIC THERMAL INSULATION.

ABOVEGROUND HVAC PIPE & ACCESSORY INSULATION APPLICATION SCHEDULE

	INSULATION MATERIAL & THICKNESS (INCHES)							FIELD-APPLIED JACKET MATERIAL						
	FLEXIBLE ELASTOMERIC	FIBERGLASS	MINERAL WOOL	POLYISOCYANURATE	PHENOLIC	CELLULAR GLASS	CALCIUM SILICATE	ALUMINUM	STAINLESS STEEL	PVC	SELF-ADHESIVE (FOR OUTDOOR APPLICATIONS)	PVDC (INDOOR)	PVDC (OUTDOOR)	KEYED NOTES
INDOOR PIPE SYSTEM AND SIZE (INCHES)														
CHILLED WATER & BRINE 40 DEG F & BELOW														
6 AND SMALLER		1						X		X				A
8 AND LARGER		2						X		X				A
CHILLED WATER & BRINE ABOVE 40 DEG F	1	1						X		X				A
HEATING HOT WATER SUPPLY & RETURN 200 DEG F AND LOWER														
3 AND SMALLER		1						X		X				A
4 AND LARGER		1.5						X		X				A
REFRIGERANT SUCTION & HOT GAS (RIGID COPPER)	1	1						X		X				
REFRIGERANT SUCTION & HOT GAS (SOFT COPPER)	1							X		X				
OUTDOOR (ABOVEGROUND) AND TUNNEL PIPE SYSTEM AND SIZE (INCHES)														
REFRIGERANT SUCTION & HOT GAS (RIGID COPPER)	2	2						X			X			B
REFRIGERANT SUCTION & HOT GAS (SOFT COPPER)	2													B

GENERAL NOTES

1. 'X' OR THICKNESS IN INCHES INDICATES ACCEPTABLE SELECTION. IF MORE THAN ONE SELECTION IS INDICATED, CONTRACTOR MAY SELECT FROM THOSE INDICATED SELECTIONS.
2. INSULATE PIPING WITHIN AIR HANDLING EQUIPMENT THE SAME AS INDOOR PIPING. PROVIDE ALUMINUM OR STAINLESS STEEL JACKET.

KEYED NOTES

A. PROVIDE FIELD APPLIED JACKET FOR PIPING EXPOSED IN EQUIPMENT ROOMS, STORAGE ROOMS, JANITORS CLOSETS, RECEIVING ROOMS, TEST AREAS, CIRCULATION AREAS AND SUCH AREAS SUBJECT TO DAMAGE WITHIN 10 FEET (3 METERS) OF FINISHED FLOOR.
B. PROVIDE MANUFACTURER'S RECOMMENDED PROTECTIVE COATING FOR FLEXIBLE ELASTOMERIC THERMAL INSULATION.
C. STEAM AND CONDENSATE PIPING JACKET SHALL BE STUCCO EMBOSSED.
D. PIPING WITHIN ENERGY RECOVERY UNITS SHALL BE TYPE 304 STAINLESS STEEL, SMOOTH; 0.010 INCH THICK. SEAMS AND JOINTS CAULKED WITH CHEMICALLY RESISTANT SEALER.

PUMP SCHEDULE

UNIT IDENTIFICATION	SYSTEM SERVED	LOCATION	TYPE	COUPLING TYPE	WATERFLOW GPM	FLUID TYPE	COLDEST SYSTEM OPERATING TEMP. °F FOR PUMP SELECTION	PUMP HEAD FT.	OVERLOAD GPM	MINIMUM EFFICIENCY %	MOTOR			MODULATION/ CONTROL TYPE	ELECTRICAL			MODEL NUMBER	REMARKS
											BHP	HP	RPM		VOLTS	PHASE	OPTIONS/ ACCESSORIES		
P-1	HOT WATER SYSTEM	BOILER ROOM	CENTRIFUGAL	CLOSE	175	WATER	32.0	35	NON-OVERLOADING	74.13	2.13	3	1750	AUTO	208	3	B	E-1510-2.5AB	
P-2	HOT WATER SYSTEM	BOILER ROOM	CENTRIFUGAL	CLOSE	175	WATER	32.0	35	NON-OVERLOADING	74.13	2.13	3	1750	AUTO	208	3	B	E-1510-2.5AB	
P-3	HOT WATER SYSTEM	BOILER ROOM	CENTRIFUGAL	CLOSE	50	WATER	32.0	45	NON-OVERLOADING	56.0	0.99	1 1/2	1750	AUTO	208	3	B	E-1510-1.25AD	NOTE 4
P-4	HOT WATER SYSTEM	BOILER ROOM	CENTRIFUGAL	CLOSE	50	WATER	32.0	45	NON-OVERLOADING	56.0	0.99	1 1/2	1750	AUTO	208	3	B	E-1510-1.25AD	NOTE 4
CP-1	EXISTING BOILER	BOILER ROOM	INLINE	FLEXIBLE	75	WATER	32.0	20	NON-OVERLOADING	65.0	---	3/4	1750	AUTO	208	3	B	E-90 3AAB	NOTE 4
CP-2	EXISTING BOILER	BOILER ROOM	INLINE	FLEXIBLE	75	WATER	32.0	20	NON-OVERLOADING	65.0	---	3/4	1750	AUTO	208	3	B	E-90 3AAB	NOTE 4
CP-3	EXISTING BOILER	BOILER ROOM	INLINE	FLEXIBLE	75	WATER	32.0	20	NON-OVERLOADING	65.0	---	3/4	1750	AUTO	208	3	B	E-90 3AAB	NOTE 4

NOTE:
1. REFER TO SCHEDULES GENERAL NOTES.
2. MODEL NUMBER ARE BELL & GOSSETT UNLESS OTHERWISE NOTED.
3. FLUID TYPE: W = WATER, PGXX = PROPYLENE GLYCOL SOLUTION XX PERCENTAGE OF GLYCOL, EGXX = ETHYLENE GLYCOL SOLUTION XX PERCENTAGE OF GLYCOL.
4. PROVIDE PRE-CONSTRUCTION WATER FLOW AND HEAD PRESSURE BALANCE REPORT FOR FINALIZING PUMP SELECTION.

SCHEDULES GENERAL NOTES:

TYPICAL FOR ALL SCHEDULE SHEETS:

1. REFER TO ELECTRICAL STANDARD SCHEDULES, ONE LINE DIAGRAM AND PANEL SCHEDULES FOR ADDITIONAL ELECTRICAL INFORMATION
2. PROVIDE THE FOLLOWING FACTORY-WIRED ELECTRICAL OPTIONS/ACCESSORIES WHERE INDICATED IN SCHEDULE:
   A - NON-FUSED DISCONNECT SWITCH
   B - UNIT SHALL BE SINGLE POINT ELECTRICAL CONNECTION WITH FACTORY INSTALLED DISCONNECTING MEANS AND ALL REQUIRED STARTERS AND CONTROLS
   C - SERVICE RECEPTACLE
   D - FUSED DISCONNECT SWITCH
   E - COMBINATION STARTER
   F - UNIT SHALL HAVE (2) SINGLE POINT CONNECTIONS WITH FACTORY INSTALLED DISCONNECTING MEANS AND ALL REQUIRED STARTERS AND CONTROLS. (1) CONNECTION SHALL BE FOR CONDENSING SECTION AND (1) CONNECTION SHALL BE FOR THE REMAINDER OF THE UNIT.
3. FOR MODULATION/CONTROL TYPE COLUMN, "VFC" INDICATES VARIABLE FREQUENCY CONTROLLERS, "AUTO" INDICATES AUTOMATIC OPERATION (CONTROLLED BY TEMPERATURE CONTROLS OR SELF CONTAINED CONTROLS), "MANUAL" INDICATES HAND OPERATION.
4. IF VARIABLE FREQUENCY CONTROLLERS ARE INDICATED TO BE PROVIDED AND ARE NOT INSTALLED INTEGRAL TO THE UNIT, VARIABLE FREQUENCY CONTROLLERS SHALL BE SUPPLIED BY THE MECHANICAL CONTRACTOR (UNLESS OTHERWISE NOTED) AND INSTALLED BY THE ELECTRICAL CONTRACTOR INCLUDING THE LINE SIDE AND LOAD SIDE WIRING TO THE MOTOR AND INCLUDING MISCELLANEOUS STEEL REQUIRED FOR THE SUPPORT AND MOUNTING OF THE VFC. REFER TO FLOOR PLANS FOR LOCATION.
5. WHERE EQUIPMENT IS INDICATED TO HAVE A SINGLE POINT ELECTRICAL CONNECTION, THAT EQUIPMENT SHALL COME COMPLETE WITH FACTORY INSTALLED STARTERS, MOTOR OVERLOAD PROTECTION, CONTACTORS, FUSING AND ALL NECESSARY INTERNAL WIRING AND CONTROLS. PROVIDE A FACTORY MOUNTED UNIT DISCONNECTING MEANS WHERE THE ELECTRICAL CONTRACTOR SHALL MAKE SINGLE POINT CONNECTION. INSTALL PACKAGED EQUIPMENT SUCH THAT THE ELECTRICAL CONNECTION AND CONTROLS ARE ACCESSIBLE AND HAVE CLEARANCES MEETING THE NATIONAL ELECTRICAL CODE.
6. WHERE PACKAGED EQUIPMENT IS PROVIDED, NAMEPLATE MUST INDICATE MAXIMUM OVERCURRENT PROTECTION BY HACR RATED CIRCUIT BREAKERS OR FUSES. IF FUSE PROTECTION ONLY IS INDICATED, PROVIDE A FUSIBLE DISCONNECT AND FUSES WITH THE UNIT.
7. WHERE EQUIPMENT IS DESIGNATED BY MANUFACTURER AND MODEL NUMBER, THIS IS THE BASIS OF DESIGN. IF THE CONTRACTOR ELECTS TO PROVIDE EQUIPMENT BY OTHER SPECIFIED MANUFACTURERS OR PROPOSED ALTERNATE EQUIPMENT BY THE BASIS OF DESIGN MANUFACTURER, THE CONTRACTOR SHALL BE RESPONSIBLE FOR ANY REVISIONS TO ELECTRICAL REQUIREMENTS, STRUCTURAL LOADING, OR ARCHITECTURAL APPURTENANCES AND SHALL INCLUDE THE COST OF SUCH REVISIONS IN HIS BID.
8. WHERE EQUIPMENT IS SCHEDULED TO INCLUDE A SERVICE RECEPTACLE, PROVIDE A FACTORY MOUNTED SERVICE RECEPTACLE WITH APPROPRIATE FUSES AND TRANSFORMERS CONNECTED ON THE LINE SIDE OF THE UNIT DISCONNECT. PROVIDE A NAMEPLATE ON THE DISCONNECT SWITCH INDICATING THE PRESENCE OF LIVE POWER TO THE SERVICE RECEPTACLE WHEN HE UNIT DISCONNECT IS IN THE OFF POSITION.
9. SIZE ALL EQUIPMENT FEEDERS BASED ON THE LISTED MOP (MAXIMUM OVERCURRENT PROTECTION). REFER TO THE FEEDER AND BRANCH CIRCUIT SIZING SCHEDULE ON THE ELECTRICAL STANDARD SCHEDULES SHEET.

DUCT SYSTEM INSULATION APPLICATION SCHEDULE

	INSULATION MATERIAL & THICKNESS (INCHES)							FIELD APPLIED JACKET MATERIAL		
	FIBERGLASS BLANKET 0.75 LB/CU FT	FIBERGLASS BLANKET 1.0 LB/CU FT	FIBERGLASS BOARD 2.25 LB/CU FT	FIBERGLASS BOARD 6.0 LB/CU FT	FLEXIBLE ELASTOMERIC	ASTM E2336 2-HOUR FIRE RATED BLANKET	2-HOUR FIRE RATED BLANKET	ALUMINUM	SELF-ADHESIVE (FOR OUTDOOR APPLICATIONS)	KEYED NOTES
DUCT SYSTEMS LOCATED INDOORS										
SUPPLY AIR, EXCEPT AS NOTED BELOW		1.5								A
EXHAUST AND RELIEF AIR BETWEEN ISOLATION DAMPER AND PENETRATION OF BUILDING EXTERIOR, EXCEPT AS NOTED BELOW		1.5								
DUCT SYSTEMS LOCATED OUTDOORS										
RECTANGULAR DUCTS AND AIR PLENUMS, ALL TYPES				2					X	E

PLENUMS, DUCTS, AND DUCT ACCESSORIES NOT REQUIRING INSULATION:
- FIBROUS-GLASS DUCTS
- DOUBLE-WALL METAL DUCTS WITH INSULATION OF SUFFICIENT THICKNESS TO COMPLY WITH ENERGY CODE AND ASHRAE/IESNA 90.1 - 2007
- METAL DUCTS WITH DUCT LINER OF SUFFICIENT THICKNESS TO COMPLY WITH ENERGY CODE AND ASHRAE/IESNA 90.1 - 2007
- EXPOSED SUPPLY DUCT IN CONDITIONED SPACE SERVED BY THAT SYSTEM
- FABRIC SUPPLY DUCTS
- FACTORY-INSULATED FLEXIBLE DUCTS
- FACTORY-INSULATED PLENUMS AND CASINGS
- FLEXIBLE CONNECTORS
- VIBRATION-CONTROL DEVICES
- FACTORY-INSULATED ACCESS PANELS AND DOORS

GENERAL NOTES

1. 'X' OR THICKNESS IN INCHES INDICATE ACCEPTABLE SELECTION. IF MORE THAN ONE SELECTION IS INDICATED FOR A DUCT SYSTEM, CONTRACTOR MAY SELECT FROM THOSE INDICATED SELECTIONS.
2. REFER TO METAL DUCT SECTION OF SPECIFICATIONS FOR DUCT LINING AND DOUBLE-WALL INSULATED DUCT.
3. REFER TO HVAC CASINGS SECTION OF SPECIFICATIONS FOR DOUBLE-WALL INSULATED PLENUMS.

KEYED NOTES

A. INCLUDE INSULATION AROUND DUCT MOUNTED COILS AND AIR TERMINAL UNIT COILS.
B. NUMBER OF LAYERS AND TOTAL INSULATION THICKNESS AS RECOMMENDED BY SELECTED MANUFACTURER.
C. DOES NOT APPLY TO PREFABRICATED, ZERO-CLEARANCE GREASE DUCT.
D. PROVIDE MANUFACTURER'S RECOMMENDED PROTECTIVE COATING FOR FLEXIBLE ELASTOMERIC THERMAL DUCT INSULATION.
E. INSULATE DUCTWORK IN CRAWLSPACES, VENTILATED ATTICS, AND PARKING GARAGES HAVING NATURAL OR MECHANICAL VENTILATION THE SAME AS OUTDOOR DUCTWORK.

WA
WAKELY ASSOCIATES, INC.
ARCHITECTS & ENGINEERS
30500 VAN DYKE AVE.
SUITE M-7
WARREN, MICHIGAN, 48093
TEL. 586-573-4100
FAX. 586-573-0822
E-MAIL: WA@WAKELYAIA.COM

PBA
Peter Basso Associates Inc
CONSULTING ENGINEERS
5145 Livernois, Suite 100
Troy, Michigan 48098-3276
Tel: 248-879-5666
Fax: 248-879-0007
www.PeterBassoAssociates.com
PBA Project No.: 2015-0144

FARMINGTON PUBLIC SCHOOLS - 2015 BOND
2018 PROJECTS
KENBROOK & BEECHVIEW ELEMENTARY SCHOOLS

KENBROOK ELEMENTARY SCHOOL
MECHANICAL SCHEDULES

- PRELIMINARY ☐
- DESIGN DEVELOPMENT ☐
- CONSTRUCTION ■
- FINAL RECORD ☐

DRAWN BY: JRM
CHECKED BY: SVM
REVISIONS:

DATE: 12-15-17
SHEET NO.:
M7.1KB
JOB NO.: 171712A

g:\2015\2015-0144-00\Cad\kenbrook es\2015-0144-M7-SH.dwg, M7.1, 12/12/2017 2:27:15 PM, Suha A. Matti, _Default.pc3 ,0.09699, Peter Basso Associates Inc.

UNITARY ROOFTOP AIR CONDITIONING UNIT SCHEDULE

UNIT I.D.	AREA SERVED	SUPPLY FAN								EXHAUST/RELIEF FAN		COOLING SECTION – DX									INTEGRAL AIR-COOLED CONDENSING SECTION			FILTER SECTION			CURB		HEIGHT	MAXIMUM UNIT DIMENSIONS			MAXIMUM UNIT OPERATING WEIGHT LBS. (WITH CURB)	ARRANGEMENT (SUPPLY/RETURN)	TOTAL UNIT ELECTRICAL					MODEL NO.	NOTES
		AIRFLOW CFM	MAX/MIN. OUTSIDE AIR FLOW CFM	MIN/MIN. OUTSIDE AIR FLOW CFM	E.S.P. IN. W.G.	T.S.P. IN. W.G.	FAN SPEED RPM	BHP	HP	AIRFLOW CFM	E.S.P. IN. W.G.	MIXED AIR		UNIT LEAVING AIR		NET UNIT CAPACITY		NUMBER OF CIRCUITS	REFRIG. TYPE	MAX. FACE VEL. F.P.M.	DESIGN AMBIENT TEMP. °F	MIN. AMBIENT TEMP. °F	NO. OF CAPACITY CONTROL STAGES	TYPE	AIR PRESS. DROP		TYPE			LENGTH	HEIGHT (WITH CURB)	WIDTH			VOLTS	PHASE	MCA	MOP	OPTIONS/ ACCESSORIES		
												E.D.B. °F	E.W.B. °F	L.D.B. °F	L.W.B. °F	TOTAL MBH	SENSIBLE MBH								INITIAL IN. W.G.	FINAL IN. W.G.	STANDARD	VIBRATION ISOLATION SPRING CURB												
RTU-1	GYMNASIUM	3,800	900	400	1.5	1.9	1060	2.77	3.0	3,800	0.5	79.2	67.4	56.3	55.9	123.5	73.8	2	R-410A	500	95.0	45.0	2	THROW AWAY	0.07	0.5	YES	NO	18	101.3	64.9	60.1	2,500	SIDE/SIDE	208	3	65.0	80	B	LCH150H4M	
RTU-2	MEDIA CENTER	3,000	1,100	340	1.0	1.85	1111	1.4	4.0	3,000	0.5	83.1	68.0	56.3	55.9	115.3	52.3	2	R-410A	200	95.0	45.0	MODULATING INVERTER	THROW AWAY	0.05	0.5	YES	NO	24	91.0	80.8	96.5	3,700	BOTTOM/BOTTOM	208	3	53.5	70	B	DPS010A	
RTU-3	NEW OFFICE	950	250	60	1.0	1.71	1926	0.4	1.3	950	0.5	82.2	67.0	56.4	56.0	33.1	23.3	1	R-410A	200	95.0	45.0	MODULATING INVERTER	THROW AWAY	0.02	0.5	YES	NO	24	67.0	64.8	87.0	1,300	BOTTOM/BOTTOM	208	3	16.7	20	B	DPS003A	

NOTE:
1. REFER TO SCHEDULES GENERAL NOTES.
2. MODEL NUMBERS ARE LENNOX UNLESS OTHERWISE NOTED
3. DESIGN MINIMUM OUTSIDE AIRFLOW CFM (VENTILATION) LISTED IS BASED ON THE ESTIMATED MAXIMUM OCCUPANT LOAD. REFER TO TEMPERATURE CONTROL DRAWINGS FOR OUTSIDE AIR CONTROL SEQUENCE.
4. MERV DESIGNATES THE "MINIMUM EFFICIENCY REPORTING VALUE" AS EVALUATED UNDER ASHRAE STANDARD 52.2 1999.
5. AIR HANDLING UNIT TOTAL STATIC PRESSURE FOR VARIABLE AIR VOLUME SYSTEMS IS BASED ON THE FILTER DIRTY AIR PRESSURE DROP AND AVERAGE/MIDLIFE FILTER AIR PRESSURE DROP FOR CONSTANT VOLUME SYSTEMS UNLESS NOTED OTHERWISE.
6. UNIT SHALL HAVE HOT GAS REHEAT. REFER TO SPECIFICATIONS.

HOT WATER PROPELLER FAN UNIT HEATER SCHEDULE

UNIT IDENTIFICATION	CAPACITY MBH	AIRFLOW CFM	LEAVING AIR TEMPERATURE °F	FAN		WATER				CONTROL VALVE W.P.D. FT. HEAD	MODULATION/ CONTROL TYPE	ELECTRICAL			MODEL NUMBER	REMARKS
				HP	RPM	FLOW GPM	E.W.T. °F	L.W.T. °F	MAXIMUM W.P.D. FT. HEAD			VOLTS	PHASE	OPTIONS/ ACCESSORIES		
UH-1	71.6	1775	102.1	1/8	1075	5.5	180.0	150.0	0.4	11.55	AUTO	120	1	B	HS-121	

HOT WATER HEATING COIL SCHEDULE

UNIT IDENTIFICATION	SYSTEM SERVED	MAXIMUM NUMBER ROWS	MAXIMUM FIN DENSITY FINS/INCH	CAPACITY MBH	AIR				MINIMUM FACE AREA SQ. FT.	WATER				CONTROL VALVE W.P.D. FT. HD.	MODEL NUMBER	REMARKS
					AIRFLOW CFM	E.D.B. °F	L.D.B. °F	MAXIMUM A.P.D. IN. W.G.		FLOW GPM	E.W.T. °F	L.W.T. °F	MAXIMUM W.P.D. FT. HEAD			
HC-1	RTU-1	2	8	163.4	3,800	50.2	90.0	0.25	5.8	10.8	180.0	150.0	0.6	11.55	5WH0802B	
HC-2	RTU-3	1	8	7.3	195	50.4	85.0	0.25	1.0	0.6	180.0	150.0	0.2	11.55	5BS0801B	
HC-3	RTU-3	1	9	14.2	380	50.4	85.0	0.03	1.0	1.0	180.0	150.0	0.2	11.55	5BS0901B	
HC-4	RTU-3	1	9	9.9	310	50.4	80.0	0.07	1.0	0.8	180.0	150.0	0.3	11.55	5BS0901B	

NOTE:
1. MODEL NUMBERS ARE DAIKIN UNLESS OTHERWISE NOTED.
2. COIL SELECTION BASED ON .00025 FOULING FACTOR.
3. COIL SELECTIONS SHALL BE BASED ON [25%] [30%] [40%] [ETHYLENE] [PROPYLENE] GLYCOL SOLUTION.

HOT WATER FINNED TUBE RADIATION SCHEDULE

UNIT IDENTIFICATION	CAPACITY BTUH/ LINEAR FT.	ENTERING AIR TEMP °F	WATER TEMP.		ENCLOSURE			ELEMENT				CONTROL VALVE W.P.D. FT. HEAD	MODEL NUMBER	REMARKS
			E.W.T. °F	AVERAGE °F	TYPE	LENGTH INCHES	HEIGHT INCHES	TUBE DIAMETER INCHES	WIDTH INCHES	HEIGHT INCHES	NUMBER OF TIERS			
FTR-1	780	65.0	180.0	150.0	DOUBLE SLOP	SEE PLANS	19 1/2	3/4	3 5/8	4 1/4	1	11.55	JV4-ARDS	

NOTE:
1. MODEL NUMBERS ARE VULCAN UNLESS OTHERWISE NOTED.

PACKAGED AIR COOLED LIQUID CHILLER SCHEDULE

UNIT NUMBER	CAPACITY TONS	CHILLED WATER						COMPRESSOR MOTOR			EFFICIENCY		CONDENSER		CONDENSER FAN MOTOR		MODULATION/ CONTROL TYPE	ELECTRICAL					MODEL NUMBER	REMARKS
		FLOW GPM	FLUID TYPE	E.W.T. °F	L.W.T. °F	MAXIMUM W.P.D. FT. HEAD	FOULING FACTOR	NUMBER OF COMPRESSOR	KW TOTAL	RLA EACH	MINIMUM FULL LOAD EER	MINIMUM IPLV (EER)	AMBIENT AIR TEMPERATURE °F	MINIMUM AMBIENT TEMPERATURE °F	QUANTITY	H.P. EACH		VOLTS	PHASE	FLA	MOP	OPTIONS/ ACCESSORIES		
CH-1	125	300	W	54.0	44.0	14.0	0.0001	4	139.1	111	10.1	15.2	95.0	32.0	8	2.0	VFC	208	3	534.2	600	B	AGZ120E	

NOTE:
1. REFER TO SCHEDULES GENERAL NOTES.
2. MODEL NUMBERS ARE DAIKIN UNLESS OTHERWISE NOTED.
3. FLUID TYPE: W = WATER, PGXX = PROPYLENE GLYCOL SOLUTION XX PERCENTAGE OF GLYCOL, EGXX = ETHYLENE GLYCOL SOLUTION XX PERCENTAGE OF GLYCOL.
4. EFFICIENCY RATINGS SHALL BE IN ACCORDANCE WITH ARI STANDARD 550/590-98 WITH ADDENDA THROUGH JULY 2002.

HOT WATER RADIANT CEILING PANEL SCHEDULE

UNIT IDENTIFICATION	CAPACITY BTUH/ LINEAR FT.	WATER TEMP		DIMENSIONS		FINISH	CONSTRUCTION	CONTROL VALVE W.P.D. FT. HEAD	MODEL NUMBER	REMARKS
		E.W.T. °F	L.W.T. °F	LENGTH INCHES	WIDTH INCHES					
RCP-1	356	180.0	150.0	SEE PLANS	24	WHITE	ALUMINUM	11.55	NOTE 2	
RCP-2	198	180.0	150.0	SEE PLANS	12	WHITE	ALUMINUM	11.55	NOTE 2	

NOTE:
1. MODEL NUMBERS ARE AIRTEX UNLESS OTHERWISE NOTED.
2. EXTRUDED ARCHITECTURAL SPACE MASTERY SERIES HEF-2 FLUTED.

HOT WATER CABINET UNIT HEATER SCHEDULE

UNIT IDENTIFICATION	CAPACITY MBH	AIR			FAN		WATER				CONTROL VALVE W.P.D. FT. HEAD	DIMENSIONS			RECESS DEPTH INCHES	FILTER		MODULATION/ CONTROL TYPE	ELECTRICAL			MODEL NUMBER	REMARKS
		AIRFLOW CFM	E.D.B. °F	L.D.B. °F	HP	RPM	FLOW GPM	E.W.T. °F	L.W.T. °F	MAXIMUM W.P.D. FT. HEAD		LENGTH INCHES	HEIGHT INCHES	DEPTH INCHES		TYPE	AREA SQ. FT.		VOLTS	PHASE	OPTIONS/ ACCESSORIES		
CUH-1	40.0	630	60.0	120.2	1/10	1050	3.0	180.0	150.0	0.64	11.55	59.0	25.0	10	5	THROW AWAY	3.11	AUTO	120	1	B	RWI-1130-06	
CUH-2	38.4	630	60.0	116.4	1/10	1050	3.0	180.0	150.0	0.64	11.55	59.0	25.0	10	10	THROW AWAY	3.11	AUTO	120	1	B	RC-1200-06	
CUH-3	18.4	335	60.0	116.8	1/15	1050	2.0	180.0	150.0	0.10	11.55	43.0	25.0	10	5	THROW AWAY	1.55	AUTO	120	1	B	RWI-1130-03	

NOTE:
1. REFER TO SCHEDULES GENERAL NOTES.
2. MODEL NUMBERS ARE STERLING UNLESS OTHERWISE NOTED.

GRAVITY RELIEF HOOD SCHEDULE

UNIT IDENTIFICATION	SYSTEM SERVED	CFM	THROAT SIZE INCHES	THROAT VELOCITY FPM	STATIC PRESSURE DROP IN. W.G.	HOOD SIZE			CURB HEIGHT INCHES	HOOD CONSTRUCTION	MODEL NUMBER	REMARKS
						WIDTH INCHES	LENGTH INCHES	HEIGHT INCHES				
GRH-1	CORRIDOR	2,060	66x9	500	0.06	19	84	14	18	ALUMINUM	FGR	
GRH-2	CORRIDOR	2,430	78x9	500	0.06	19	96	14	18	ALUMINUM	FGR	

NOTE:
1. MODEL NUMBERS ARE GREENHECK UNLESS OTHERWISE NOTED.
2. PROVIDE WITH BIRD SCREEN.

PACKAGED TERMINAL AIR CONDITIONER SCHEDULE

UNIT NUMBER	FAN			COOLING COIL – DX				HEATING COIL – ELECTRIC				MODULATION/ CONTROL TYPE	ELECTRICAL					MODEL NUMBER	REMARKS
	CFM	MINIMUM O.A. CFM	NUMBER FANS	MINIMUM TOTAL CAPACITY MBH	AIR		REFRIG. TYPE	MINIMUM TOTAL CAPACITY MBH	AIR		HEATING ELEMENT		VOLTS	PHASE	MCA	MOP	OPTIONS/ ACCESSORIES		
					E.D.B. °F	L.D.B. °F			E.D.B. °F	L.D.B. °F	KW								
PTAC-1	340	25	1	11.6	80.0	57.0	R-410A	11.9	65.9	98.4	3.5	AUTO	208	1	---	30	---	PTHF120HAA4	HARD WIRED

NOTE:
1. REFER TO SCHEDULES GENERAL NOTES.
2. MANUFACTURER BASED ON TRANE UNLESS OTHERWISE INDICATED.
3. PROVIDE UNITS WITH ELECTRIC HEAT KIT, HARDWIRE KIT, WALL SLEEVE, EXTRUDED ALUMINUM LOUVER, AND DISCONNECT SWITCH. ARCHITECT TO SELECT LOUVER COLOR.

VIBRATION ISOLATOR APPLICATION SCHEDULE

EQUIPMENT TYPE	EQUIPMENT CATEGORY	HORSEPOWER AND OTHER	RPM	EQUIPMENT LOCATION						KEYED NOTES
				SLAB ON GRADE			UP TO 40 FT (12 M) FLOOR SPAN			
				BASE TYPE	ISOLATOR TYPE	MIN. DEFL., IN. (MM)	BASE TYPE	ISOLATOR TYPE	MIN. DEFL., IN. (MM)	
REFRIGATION MACHINES AND CHILLERS	RECIPROCATING CENTRIFUGAL, SCROLL	ALL ALL	ALL ALL	A A	2 1a OR 1b	0.25 (6) 0.25 (6)	A A	4 4	2.50 (64) 1.50 (38)	NOTE 3
	SCREW ABSORPTION AIR-COOLED RECIP., SCROLL	ALL ALL ALL	ALL ALL ALL	A A A	1a OR 1b 1a OR 1b 2	1.00 (25) 0.25 (6) 0.25 (6)	A A A	4 4 4	2.50 (64) 1.50 (38) 2.50 (64)	
	AIR-COOLED SCREW OPEN CENTRIFUGAL	ALL ALL	ALL ALL	A C	4 1a OR 1b	1.00 (25) 0.25 (6)	B C	4 4	2.50 (64) 1.50 (38)	
PUMPS	CLOSE COUPLED	≤7.5 ≥10	ALL ALL	B C	2 3	0.25 (6) 0.75 (19)	C C	3 3	0.75 (19) 1.50 (38)	NOTE 3
	INLINE	5 TO 25 ≥30	ALL ALL	A A	3 3	0.75 (19) 1.50 (38)	A A	3, 8a OR 8b 3, 8a OR 8b	1.50 (38) 2.50 (64)	
BASE MOUNTED AXIAL FANS, PLENUM FANS, CABINET FANS, FAN SECTIONS, CENTRIFUGAL INLINE FANS	UP TO 22 IN. DIAMETER	ALL	ALL	A	2	0.25 (6)	C	3	0.75 (19)	NOTES 1, 3, 4
	24 IN. DIAMETER AND UP	≤2 IN. SP	UP TO 300 301 TO 500 500 AND UP	B B B	3 3 3	2.50 (64) 0.75 (19) 0.75 (19)	C C B	3 3 3	3.50 (89) 2.50 (64) 1.50 (38)	
		>2 IN. SP	UP TO 300 301 TO 500 500 AND UP	C C C	3 3 3	2.50 (64) 1.50 (38) 0.75 (19)	C C C	3 3 3	3.50 (89) 2.50 (64) 2.50 (64)	
PACKAGED ROOFTOP EQUIPMENT	ALL	≥10 TONS REFRIG. OR ≥10 HP FAN	ALL				D OR E	3	1.50 (38)	NOTES 1, 3, 4, 5

NOTES:
1. THRUST RESTRAINTS: PROVIDE THRUST RESTRAINTS BETWEEN FAN DISCHARGE AND DUCT (IN PAIRS, LOCATED ON THE CENTERLINE OF THE DISCHARGE OUTLET OF THE FAN, BRIDGING THE FLEXIBLE DUCT CONNECTOR) FOR ALL FAN HEADS, FOR AXIAL AND CENTRIFUGAL FANS UNITS OPERATING AT 2 INCHES OR GREATER TOTAL STATIC PRESSURE AND AS SHOWN ON DRAWINGS. SPRING DEFLECTION SHALL BE SAME AS THE SUPPORT ISOLATORS.
2. PIPING RISER ISOLATION: PROVIDE PIPE RISER RESILIENT ANCHORS, SPRING MOUNTS AND RESILIENT PIPE GUIDES CAPABLE OF DISTRIBUTING THE LOADS WITHIN THE BUILDING DESIGN LIMITS AT THE SUPPORT POINTS.
3. HORIZONTAL PIPING VIBRATION ISOLATION: PROVIDE TYPE 8a OR 8b SPRING HANGERS FOR PIPING CONNECTED TO VIBRATION ISOLATED EQUIPMENT FOR ALL PIPING IN MECHANICAL ROOMS OR THE FOLLOWING MINIMUM HORIZONTAL DISTANCES FROM THE ISOLATED EQUIPMENT: UP TO 6" – 50 FEET (1 1/2" MINIMUM DEFLECTION), 8" AND LARGER – 100 FEET (2 1/2" MINIMUM DEFLECTION), WHICHEVER IS GREATER, AND AS SHOWN ON DRAWINGS. THE FIRST 4 HANGERS FROM THE ISOLATED EQUIPMENT SHALL BE TYPE 8b.
4. DUCTWORK VIBRATION ISOLATION: PROVIDE TYPE 8a OR 8b SPRING HANGERS FOR DUCTWORK WITH A CROSS SECTION OF 2 SQUARE FEET OR GREATER CONNECTED TO AIR HANDLING UNITS, RETURN OR RELIEF FANS, AND VIBRATION ISOLATED EQUIPMENT FOR ALL SUCH DUCTWORK IN MECHANICAL ROOMS OR FOR A MINIMUM HORIZONTAL DISTANCE OF 100 FEET FROM THE ISOLATED EQUIPMENT, WHICHEVER IS GREATER, AND AS SHOWN ON DRAWINGS (3/4" MINIMUM DEFLECTION).
5. IF SPAN DOES NOT EXCEED 20 FT, SPRING DEFLECTION MAY BE 1.0 IN AND TYPE D BASE MAY BE USED. FOR SPANS GREATER THAN 20 FT, USE SPRING DEFLECTION INDICATED AND TYPE E BASE.

BASE TYPES:

BASE TYPE A – NO BASE, ISOLATORS ATTACHED DIRECTLY TO EQUIPMENT.
BASE TYPE B – STRUCTURAL, STEEL RAILS OR BASE.
BASE TYPE C – CONCRETE INERTIA BASE.
BASE TYPE D – CURB – MOUNTED ALUMINUM BASE WITH 1" DEFL. SPRING ISOLATORS
BASE TYPE E – CURB – MOUNTED STEEL BASE WITH ADJUSTABLE 1", 2" OR 3" DEFL. SPRING ISOLATORS

ISOLATOR TYPES:

ISOLATOR TYPE 1a – ELASTOMERIC ISOLATION PAD.
ISOLATOR TYPE 1b – ELASTOMERIC ISOLATION PAD WITH STEEL LOAD BEARING PLATE.
ISOLATOR TYPE 2 – ELASTOMERIC FLOOR ISOLATOR.
ISOLATOR TYPE 3 – FREE STANDING SPRING FLOOR ISOLATOR.
ISOLATOR TYPE 4 – RESTRAINED SPRING ISOLATOR.
ISOLATOR TYPE 5 – THRUST RESTRAINT.
ISOLATOR TYPE 6 – AIR SPRING.
ISOLATOR TYPE 7 – ELASTOMERIC HANGERS.
ISOLATOR TYPE 8a – SPRING HANGERS.
ISOLATOR TYPE 8b – SPRING HANGERS WITH VERTICAL-LIMIT STOP.

POWER VENTILATOR SCHEDULE

UNIT IDENTIFICATION	SYSTEM SERVED	TYPE	AIRFLOW CFM	T.S.P. IN. W.G.	TIP SPEED FPM	FAN RPM	MOTOR				CURB HEIGHT INCHES	MODULATION/ CONTROL TYPE	ELECTRICAL			MAXIMUM SOUND POWER LEVELS							MODEL NUMBER	REMARKS
							BHP	HP	RPM	DRIVE TYPE			VOLTS	PHASE	OPTIONS/ ACCESSORIES	UNIT INLET Lw BY OCTAVE BAND								
																63 HZ (DB)	125 HZ (DB)	250 HZ (DB)	500 HZ (DB)	1000 HZ (DB)	2000 HZ (DB)	4000 HZ (DB)	8000 HZ (DB)	
EF-1	TOILET ROOM	CENTRIFUGAL	100	0.3	3,388	1593	0.02	1/10	1725	DIRECT	18	AUTO	120	1	B	59	63	60	50	47	49	41	34	G-060-VG
EF-2	MECHANICAL B119	CENTRIFUGAL	200/1205	0.3	4,593	1577	0.21	1/4	1725	DIRECT	18	AUTO	120	1	B	73	72	78	69	64	66	59	53	CUBE-101-VG

NOTE:
1. REFER TO SCHEDULES GENERAL NOTES.
2. MODEL NUMBERS ARE GREENHECK UNLESS OTHERWISE NOTED.

WA
WAKELY ASSOCIATES, INC.
ARCHITECTS & ENGINEERS
30500 VAN DYKE AVE.
SUITE M-7
WARREN, MICHIGAN, 48093
TEL. 586-573-4100
FAX. 586-573-0822
E-MAIL: WA@WAKELYAIA.COM

Peter Basso Associates Inc
CONSULTING ENGINEERS
5145 Livernois, Suite 100
Troy, Michigan 48098-3276
Tel: 248-879-5668
Fax: 248-879-0007
www.PeterBassoAssociates.com
PBA Proj. No.: 2015-014

FARMINGTON PUBLIC SCHOOLS - 2015 BOND
2018 PROJECTS
KENBROOK & BEECHVIEW ELEMENTARY SCHOOLS

KENBROOK ELEMENTARY SCHOOL
MECHANICAL SCHEDULES

PRELIMINARY ☐
DESIGN DEVELOPMENT ☐
CONSTRUCTION ■
FINAL RECORD ☐

DRAWN BY: JRM
CHECKED BY: SVM

REVISIONS:

DATE: 12-15-17
SHEET NO.:
M7.2KB
JOB NO.: 171712A

g:\2015\2015-0144-00\Cad\kenbrook es\2015-0144-M7-SH.dwg, M7.2, 12/12/2017 2:27:16 PM, Suha A. Matti, _Default.pc3 ,0.09699, Peter Basso Associates Inc.

PLUMBING CONNECTION SCHEDULE

UNIT IDENTIFICATION	CW INCHES	HW INCHES	SAN INCHES	VENT INCHES	REMARKS
UR-1	3/4	–	2	1 1/2	
WC-1/WC-2	1 1/2	–	4	2	
LAV-1	1/2	1/2	1 1/2	1 1/2	
SK-1/WF-1	3/4	3/4	1 1/2	1 1/2	
EWC-1/DF-1	1/2	–	1 1/2	1 1/2	
SH-1/SH-2	3/4	3/4	–	–	
FD-1	–	–	3	–	

NOTE: INDIVIDUAL WATER LINE BRANCHES, WASTE LINES, VENTS, AND TRAPS FOR CONNECTION TO INDIVIDUAL FIXTURES, FIXTURE FITTINGS, AND SPECIALTIES SHALL BE IN ACCORDANCE WITH THE FOLLOWING SCHEDULE OR AS INDICATED ON DRAWINGS, WHICHEVER IS GREATER.

GRILLE, REGISTER, AND DIFFUSER SCHEDULE

UNIT IDENTIFICATION	TYPE	FACE SIZE	NECK SIZE	FRAME TYPE	ACCESSORY	CONSTRUCTION	FINISH	MODEL NUMBER	REMARKS
S-1	DIFFUSER	24x24	SEE PLANS	LAY-IN	---	STEEL	WHITE	SPD	
S-2	DIFFUSER	31 1/2	14ø	SURFACE	---	STEEL	WHITE	RPD	
S-3	DIFFUSER	24x24	NOTE 5	LAY-IN	---	STEEL	WHITE	SPD	
R-1	GRILLE	NECK SIZE + 1 3/4	SEE PLANS	SURFACE	---	STEEL	WHITE	91	
R-2	GRILLE	24x24	22x22	LAY-IN	---	STEEL	WHITE	PDDR	
R-3	GRILLE	24x12	22x10	LAY-IN	---	STEEL	WHITE	PDDR	
E-1	GRILLE	24x24	10x10	LAY-IN	---	STEEL	WHITE	PDDR	
E-2	GRILLE	NECK SIZE + 1 3/4	SEE PLANS	SURFACE	---	STEEL	WHITE	530	
T-1	GRILLE	24x24	22x22	LAY-IN	---	STEEL	WHITE	PDDR	

NOTE:
1. MODEL NUMBERS ARE TITUS UNLESS OTHERWISE NOTED.
2. DIFFUSERS INSTALLED IN BOTH CYP AND LAY-IN CEILINGS. CONTRACTORS TO VERIFY IN FIELD.
3. COLOR SELECTED BY ARCHITECT FROM MANUFACTURER'S STANDARD COLORS.
4. REFER TO DETAILS SHEET FOR RETURN GRILLE DETAIL.
5. FIELD VERIFY NECK SIZE PRIOR TO ORDER.

PLUMBING FIXTURE SCHEDULE

UNIT IDENTIFICATION	WATER CLOSET & URINAL						FLUSH VALVE		TOILET SEAT	REMARKS
	FIXTURE MATERIAL	FIXTURE COLOR	MOUNTING STYLE	BOWL TYPE	SUPPLY SPUD LOCATION	MANUFACTURER/ MODEL	CONSUMPTION (GALLONS PER FLUSH)	MANUFACTURER/ MODEL	MANUFACTURER/ MODEL	
WC-1	VITREOUS CHINA	WHITE	FLOOR	ELONGATED	TOP	KOHLER/K-4406	1.6	SLOAN/ROYAL 111-1.6 SFSM	KOHLER/K-4731-SC	WITH BOTTOM DISCHARGE OUTLET.
WC-2 (A.D.A.)	VITREOUS CHINA	WHITE	FLOOR	ELONGATED	TOP	KOHLER/K-4405	1.6	SLOAN/ROYAL 111-1.6 SFSM	KOHLER/K-4731-SC	WITH BOTTOM DISCHARGE OUTLET.
UR-1	VITREOUS CHINA	WHITE	WALL	ELONGATED	TOP	KOHLER/K-4904-ET	1.0	SLOAN/ROYAL 186-1 SFSM	---	WITH BACK OUTLET.

APPROVED MANUFACTURERS:
WATER CLOSETS – KOHLER, AMERICAN STANDARD, SLOAN.
TOILET SEATS – KOHLER, AMERICAN STANDARD, BEMIS, CHURCH & OLSONITE.
FLUSHOMETERS – SLOAN

UNIT IDENTIFICATION	LAVATORY & SINKS						FAUCET			REMARKS
	FIXTURE MATERIAL	FIXTURE COLOR	MOUNTING STYLE	BOWL DIMENSIONS L x W x D INCHES	OVERALL DIMENSIONS L x W INCHES	MANUFACTURER/ MODEL	FLOW RATE GALLONS/ MINUTE	DESCRIPTION	MANUFACTURER/ MODEL	
LAV-1	VITREOUS CHINA	WHITE	WALL	15 x 10 x 6 1/2	21 1/4 x 18 1/8	KOHLER/K-2007	MAX. 0.25 GAL/USE	BRASS/CHROM PLATED, SINGLE FAUCET WITH METERED PUSH BUTTON OPERATION W/ VANDAL PROOF AERATOR	CHICAGO FAUCETS / 333-665VPA	NOTE 2, COMPLETE W/THERMOSTATIC MIXING VALVE (MV-2), GRID DRAIN AND PROTECTIVE SHIELDING PIPE COVERS.
WF-1 (A.D.A)	CORTERRA	---	WALL	---	55 x 20-3/4	ACORN / MERIDIAN 3792-1-H-DV	0.5/STATION	2-STATION MANUAL METERED FAUCETS (PUSH BUTTON)	---	BACK OUTLET, 2-STATION, INTEGRAL ASSE 1070 MIXING VALVE, ARCHITECT TO SELECT COLOR
SK-1	STAINLESS STEEL	STAINLESS STEEL	TOP MOUNT	28 x 16 x 7-1/2	31 x 22 x 7-5/8	ELKAY/LR3122	1.5	BRASS/CHROME PLATED 8" FIXED CENTERS, 8" RIGID/SWING GOOSENECK, 4" VANDAL PROOF WRIST BLADE HANDLE, SIDE SPRAY	CHICAGO FAUCETS / 200-AGNBAE35-317AB	NOTE 2, COMPLETE WITH GARBAGE DISPOSAL (D-1), COMPLETE WITH THERMOSTATIC MIXING VALVE, GRID DRAIN AND PROTECTIVE SHIELDING PIPE COVERS.

UNIT IDENTIFICATION	DISPOSAL				DISCRIPTION/REMARKS
	RPM	VOLTAGE	HORSE POWER	MANUFACTURER/MODEL	
D-1	1725	120	3/4	IN-SINK-ERATOR	CONTINUOUS-FEED, HOUSEHOLD TYPE FOOD-WASTE DISPOSER. INCLUDE RESET BUTTON; WALL SWITCH; CORROSION-RESISTANT CHAMBER WITH JAM-RESISTANT, CUTLERY- OR STAINLESS-STEEL GRINDER OR SHREDDER; NPS 1-1/2 (DN 40) OUTLET; QUICK-MOUNTING, STAINLESS-STEEL SINK FLANGE; ANTISPLASH GUARD; AND COMBINATION COVER/STOPPER

UNIT IDENTIFICATION	FLOOR DRAINS & FLOOR SINKS					ACCESSORIES AND FEATURES	MANUFACTURER/MODEL	REMARKS
	PATTERN	TOP SHAPE	OUTLET SIZE INCHES	OUTLET TYPE	COATING			
FD-1	FLOOR DRAIN	ROUND	3	BOTTOM	ENAMEL	SEEPAGE FLANGE, CLAMPING DEVICE	JAY R. SMITH / 2005Y-NB-A	7 INCH DIAMETER NICKEL BRONZE TOP STRAINER, COMPLETE WITH TRAP SEAL PROTECTION DEVICE (SURESEAL), REFER TO SPECIFICATIONS. PROVIDE SEDIMENT BUCKET
FS-1	FLOOR SINK	ROUND	3	BOTTOM	ENAMEL	SEEPAGE FLANGE, CLAMPING DEVICE, FULL GRATE WITH CENTER OPENING	ZURN/Z1960-3	INSTALL RIM OF FLOOR SINK FLUSH WITH FINISHED FLOOR. COMPLETE W/TRAP SEAL PROTECTION DEVICE (SURESEAL). REFER TO SPECIFICATIONS

NOTE:
1. PROVIDE GRID WASTE OUTLET FOR ALL SINKS.
2. PROVIDE CHROME PLATED, CAST BRASS P-TRAP AND WASTE TO WALL ESCUTCHEON.

APPROVED MANUFACTURERS:
LAVATORIES – KOHLER, AMERICAN STANDARD, SLOAN, & ZURN.
SINKS – ELKAY & JUST.
SERVICE SINKS – KOHLER, AMERICAN STANDARD & ZURN.
FAUCETS – CHICAGO FAUCETS, AMERICAN STANDARD, & SLOAN.
FLOOR DRAINS – JOSAM, MIFAB, SIOUX CHIEF, JAY R. SMITH, TYLER PIPE, WATTS & ZURN.
DISPOSALS – IN-SINK-ERATOR

UNIT IDENTIFICATION	ELECTRIC WATER COOLER & DRINKING FOUNTAIN						BUBBLER			REMARKS
	FIXTURE MATERIAL	FIXTURE COLOR	MOUNTING STYLE	NUMBER OF BOWLS	OVERALL DIMENSIONS L x W x D INCHES	MANUFACTURER/ MODEL	STYLE	FLOW RATE	ELECTRICAL	
DF-1	STAINLESS STEEL	SATIN FINISH	WALL MOUNTED	1	31 1/2 x 19 x 10 5/8	MURDOCK A181400F	VANDAL-RESISTANT	---	---	ACCESS PANEL AND CARRIER

APPROVED MANUFACTURERS:
DRINKING FOUNTAIN – MURDOCK.

VERTICAL UNIT VENTILATOR SCHEDULE

UNIT NUMBER	FAN				COOLING COIL – WATER									HEATING COIL – WATER								ARRANGEMENT	MODULATION/ CONTROL TYPE	ELECTRICAL					MODEL NUMBER	REMARKS
	CFM	MINIMUM O.A. CFM	H.P. EACH (SUPPLY)	H.P. EACH (EXHAUST)	MINIMUM TOTAL CAPACITY MBH	MINIMUM SENSIBLE CAPACITY MBH	AIR E.D.B. °F	AIR L.D.B. °F	WATER FLOW GPM	WATER E.W.T. °F	WATER L.W.T. °F	WATER MAXIMUM W.P.D. FT. HEAD	WATER CONTROL VALVE W.P.D. FT. HEAD	MINIMUM TOTAL CAPACITY MBH	AIR E.D.B. °F	AIR L.D.B. °F	WATER FLOW GPM	WATER E.W.T. °F	WATER L.W.T. °F	WATER MAXIMUM W.P.D. FT. HEAD	WATER CONTROL VALVE W.P.D. FT. HEAD			VOLTS	PHASE	MCA	MOP	OPTIONS/ ACCESSORIES		
VUV-1	800	70	1/2	1/3	30.2	21.2	76.4	64.4	6.0	44	54	1.0	11.5	36.4	64.8	85.0	2.5	180	150	0.3	11.5	VERTICAL	AUTO	120	1	14.6	20	B	CAH 1000A CW	NOTE 3

NOTE:
1. REFER TO SCHEDULES GENERAL NOTES.
2. MANUFACTURER BASED ON CHANGE AIR UNLESS OTHERWISE INDICATED.
3. PROVIDE 10" REAR EXTENSION.

WA
WAKELY ASSOCIATES, INC.
ARCHITECTS & ENGINEERS
30500 VAN DYKE AVE.
SUITE M-7
WARREN, MICHIGAN, 48093
TEL. 586-573-4100
FAX. 586-573-0822
E-MAIL: WA@WAKELYAIA.COM

Peter Basso Associates Inc
CONSULTING ENGINEERS
5145 Livernois, Suite 100
Troy, Michigan 48098-3276
Tel: 248-879-5668
Fax: 248-879-0007
www.PeterBassoAssociates.com
PBA Project No.: 2015-0144

FARMINGTON PUBLIC SCHOOLS - 2015 BOND
2018 PROJECTS
KENBROOK & BEECHVIEW ELEMENTARY SCHOOLS

KENBROOK ELEMENTARY SCHOOL
MECHANICAL SCHEDULES

PRELIMINARY ☐
DESIGN DEVELOPMENT ☐
CONSTRUCTION ■
FINAL RECORD ☐

DRAWN BY: JRM
CHECKED BY: SVM

REVISIONS:

DATE: 12-15-17
SHEET NO.: M7.3KB
JOB NO.: 171712A

g:\2015\2015-0144-00\Cad\kenbrook es\2015-0144-M7-SH.dwg, M7.3, 12/12/2017 2:27:17 PM, Suha A. Matti, _Default.pc3 ,0.09699, Peter Basso Associates Inc.

TEMPERATURE CONTROL - SYMBOLS LIST

SCHEMATIC SYMBOLS

SYMBOL	DESCRIPTION
AFC	AIR FLOW CONTROLLER
AQ	AQUASTAT, STRAP ON BULB
CO2	CARBON DIOXIDE SENSOR – WALL MOUNTED
CO2	CARBON DIOXIDE SENSOR – DUCT MOUNTED
CO	CARBON MONOXIDE SENSOR – WALL MOUNTED
CO	CARBON MONOXIDE SENSOR – DUCT MOUNTED
CS	CURRENT SWITCH
CT	CURRENT TRANSMITTER
	DAMPER – INLET VANES
	DAMPER – OPPOSED BLADE
	DAMPER – PARALLEL BLADE
M	DAMPER MOTOR
M	DAMPER MOTOR W/ POSITIVE POSITIONER
DPT	DIFFERENTIAL PRESSURE TRANSMITTER
DPS	DIFFERENTIAL PRESSURE SWITCH
CM	FIRE ALARM SYSTEM, ADDRESSABLE CONTROL MODULE
IM	FIRE ALARM SYSTEM, ADDRESSABLE INTERFACE MODULE
FMS	FLOW MEASURING STATION
FM	FLOW METER
FS	FLOW SWITCH
FZ	FREEZESTAT
F/	GAUGE – FLOW
P/	GAUGE – PRESSURE
T/	GAUGE – TEMPERATURE
	GUARD FOR STAT OR SENSOR
	HUMIDIFIER
H	HUMIDISTAT OR HUMIDITY SENSOR (AS DEFINED ON TC DRAWINGS)
H	HUMIDITY SENSOR, DUCT MOUNTED
LVL	LEVEL SWITCH OR TRANSMITTER
LS	LIMIT SWITCH
	LINE – ELECTRIC
	LINE – PNEUMATIC
M	MAIN CONTROL AIR SUPPLY
M/S	MOTOR STARTER
OS	OCCUPANCY SENSOR
R	PILOT LIGHT OR BEACON R – RED LENS A – AMBER LENS B – BLUE LENS G – GREEN LENS
PS	PRESSURE SWITCH
PT	PRESSURE TRANSMITTER
R	RELAY, ELECTRIC
N	SELECTOR SWITCH, (N=NUMBER OF POSITIONS)
AI	SIGNAL – DDC/BAS, ANALOG INPUT
AO	SIGNAL – DDC/BAS, ANALOG OUTPUT
DI	SIGNAL – DDC/BAS, DIGITAL INPUT
DO	SIGNAL – DDC/BAS, DIGITAL OUTPUT
AI	SIGNAL – PACKAGED EQUIPMENT, ANALOG INPUT
AO	SIGNAL – PACKAGED EQUIPMENT, ANALOG OUTPUT
DI	SIGNAL – PACKAGED EQUIPMENT, DIGITAL INPUT
DO	SIGNAL – PACKAGED EQUIPMENT, DIGITAL OUTPUT

NOTE: REFER TO MECHANICAL STANDARDS ON DRAWING M0.1 FOR ADDITIONAL SYMBOLS & ABBREVIATIONS THAT MAY BE USED ON TEMPERATURE CONTROL DRAWINGS.

SCHEMATIC SYMBOLS (CONT.)

SYMBOL	DESCRIPTION
DD	SMOKE DETECTOR – DUCT MOUNTED
SD	SMOKE DETECTOR – SPACE MOUNTED
S/S	START/STOP RELAY
SPT	STATIC PRESSURE TRANSMITTER
SP	STATIC PRESSURE SENSOR OR PROBE
SW	SWITCH
T	TEMPERATURE SENSOR – RIGID ELEMENT IN WELL
T	TEMPERATURE SENSOR – STRAP ON BULB
T	TEMPERATURE SENSOR – DUCT MOUNTED AVG ELEMENT
T	TEMPERATURE SENSOR – DUCT MOUNTED RIGID ELEMENT
T	THERMOSTAT OR TEMPERATURE SENSOR (AS DEFINED ON TC DRAWINGS)
T N	THERMOSTAT FOR NIGHT SETBACK
XF	TRANSFORMER
	VALVE – 2 WAY CONTROL VALVE
	VALVE – 3 WAY CONTROL VALVE
M	VALVE – 2 WAY CONTROL W/ POSITIONER
M	VALVE – 3 WAY CONTROL W/ POSITIONER
VFC	VARIABLE FREQUENCY CONTROLLER
VS	VELOCITY SENSOR
VIB	VIBRATION SWITCH
V	VOLTAGE SENSOR

WIRING SYMBOLS

SYMBOL	DESCRIPTION
	AUDIBLE DEVICE (AS DEFINED ON TC DRAWINGS)
M/S	COIL – MOTOR STARTER CONTACTOR
R	COIL – RELAY
TDR	COIL – TIME DELAY RELAY
VFC	COIL – VARIABLE FREQUENCY CONTROLLER CONTACTOR
	COIL – EP OR SOLENOID VALVE
	CONTACT – INSTANT OPERATING, NO
	CONTACT – INSTANT OPERATING, NC
	CONTACT – TIMED AFTER COIL IS ENERGIZED, NOTC
	CONTACT – TIMED AFTER COIL IS ENERGIZED, NCTO
	CONTACT – TIMED AFTER COIL IS DE-ENERGIZED, NOTO
	CONTACT – TIMED AFTER COIL IS DE-ENERGIZED, NCTC
	GROUND
	MOTOR, SINGLE PHASE
R	PILOT LIGHT OR BEACON R – RED LENS A – AMBER LENS B – BLUE LENS G – GREEN LENS
R	PILOT LIGHT, WITH PUSH-TO-TEST
	PUSH BUTTON – MOMENTARY CONTACT, NO
	PUSH BUTTON – MOMENTARY CONTACT, NC
	PUSH BUTTON – MOMENTARY CONTACT, NO & NC
	PUSH BUTTON – MOMENTARY, NO (MUSHROOM HEAD)
	PUSH BUTTON – MOMENTARY, NC (MUSHROOM HEAD)

WIRING SYMBOLS (CONT.)

SYMBOL	DESCRIPTION
1 2	SWITCH – 2 POSITION SELECTOR
H O A	SWITCH – 3 POSITION SELECTOR HAND/OFF/AUTO
	SWITCH – FLOW (AIR, WATER, ETC.), NO
	SWITCH – FLOW (AIR, WATER, ETC.), NC
	SWITCH – LIMIT, NO
	SWITCH – LIMIT, NO, HELD CLOSED
	SWITCH – LIMIT, NC
	SWITCH – LIMIT, NC, HELD OPEN
	SWITCH – LIQUID LEVEL, NO
	SWITCH – LIQUID LEVEL, NC
	SWITCH – MANUAL SPST, NO
	SWITCH – MANUAL DPDT, NO
	SWITCH – MANUAL SPST, NC
	SWITCH – MANUAL DPDT, NC
	SWITCH – MANUAL SPDT
	SWITCH – MANUAL DPDT
	SWITCH – PRESSURE & VACUUM, NO
	SWITCH – PRESSURE & VACUUM, NC
	SWITCH – TEMPERATURE ACTUATED, NO
	SWITCH – TEMPERATURE ACTUATED, NC
	THERMAL OVERLOAD, SINGLE PHASE
OL'S	THERMAL OVERLOAD CONTACTS – 3 PHASE
	TRANSFORMER
	WIRE TERMINATION AT DEVICE
	WIRE TO WIRE TERMINATION
	WIRING NOT CONNECTED

WIRING TERMS

ABBREVIATION	DESCRIPTION
SPST	SINGLE POLE SINGLE THROW
SPDT	SINGLE POLE DOUBLE THROW
DPST	DOUBLE POLE SINGLE THROW
DPDT	DOUBLE POLE DOUBLE THROW
NO	NORMALLY OPEN
NC	NORMALLY CLOSED
NOTO	NORMALLY OPEN TIMED OPEN
NOTC	NORMALLY OPEN TIMED CLOSED
NCTO	NORMALLY CLOSED TIMED OPEN
NCTC	NORMALLY CLOSED TIMED CLOSED

NOTE: SOME SYMBOLS & ABBREVIATIONS SHOWN MAY NOT APPLY TO THIS PROJECT.

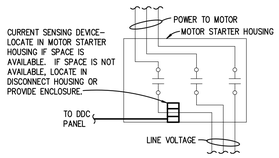

CURRENT SWITCH INSTALLATION DETAIL

TYPICAL FOR ALL CURRENT SWITCHES USED ON FAN AND PUMP MOTORS.
NOTES:

1. ALL MOTOR LOADS SHOWN ON DRAWINGS SHALL HAVE CURRENT SWITCHES FOR STATUS INDICATION AND RUN HOURS TOTALIZATION BY DDC TO THE BAS.
2. INSTALL CURRENT SWITCH ON MOTOR LEADS. CURRENT SWITCH SHALL BE ADJUSTED TO MEET THE CURRENT DRAW REQUIRED TO DETECT FAN BELT LOSS, PUMP COUPLING DETACHMENT, OR VFC LOSS.

SEQUENCE OF OPERATION

CURRENT SWITCH INSTALLATION:

1. ALL DELAY TIMERS DESCRIBED IN THE SEQUENCE SHALL BE ADJUSTABLE BY SYSTEM OPERATORS (CREATE REQUIRED VIRTUAL POINTS).
2. UPON FAN OR PUMP MOTOR START OR STOP, AND AFTER 120 SECONDS (ADJUSTABLE) DELAY BY DDC, IF THE CURRENT DRAW IS NOT APPROPRIATE, DDC SHALL ALARM THE MOTOR STATUS POINT.
3. WHEN FAN OR PUMP IS ON AND NOT IN ALARM, DDC SHALL TOTALIZE RUN TIME HOURS FOR BAS USE.

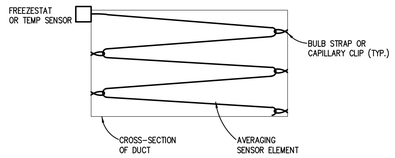

AVERAGING ELEMENT INSTALLATION DETAIL

NO SCALE

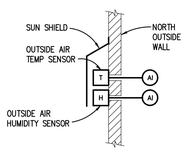

OA SENSOR INSTALLATION DETAIL

NO SCALE

SEQUENCE OF OPERATION

OUTSIDE AIR SENSORS DETAIL:

1. REPLACE EXISTING OA TEMPERATURE SENSOR WITH A NEW OA TEMPERATURE AND RELATIVE HUMIDITY SENSOR IN THE SAME LOCATION.
2. PROVIDE OA TEMPERATURE, HUMIDITY, AND ENTHALPY CALCULATION ON BACNET FOR CONTROL DECISIONS AND DISPLAY AT THE BAS.

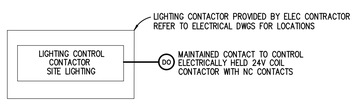

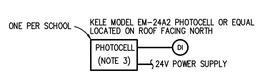

EXTERIOR LIGHTING CONTROLLER

NOTES:

1. REFER TO LIGHTING SYSTEM AND CONTROLLER DETAILS ON ELECTRICAL DRAWINGS.
2. COORDINATE WIRING REQUIREMENTS AND TERMINATIONS WITH ELECTRICAL CONTRACTOR.
3. TC CONTRACTOR SHALL PROVIDE PHOTOCELL, 24V POWER SUPPLY AND ASSOCIATED WIRING FOR BAS FOR MONITORING AND OVERRIDE OFF CONTROL OF EXTERIOR LIGHTING SCHEDULES.

SEQUENCE OF OPERATION:

1. DDC SHALL CONTROL INTERIOR LIGHTING ZONE(S) BASED ON TIME SCHEDULE.
2. FOR EXTERIOR LIGHTING CONTROLLERS: DDC MONITORED PHOTOCELL SHALL BE USED FOR "ON" CONTROL BASED ON SCHEDULED OPERATION AND BAS CONTROL "OFF" AS DIRECTED BY OWNER.

GENERAL NOTES:

1. THESE GENERAL NOTES SHALL BE APPLICABLE FOR ALL TC DRAWINGS.
2. "PROVIDE" IS DEFINED AS "FURNISH AND INSTALL".
3. TC CONTRACTOR SHALL BE RESPONSIBLE TO COMPLY WITH ALL APPLICABLE CODES AND STANDARDS.
4. FOR TEMPERATURE CONTROL DRAWINGS ONLY: ALL DETAILED INFORMATION IDENTIFIED WITH HEAVY LINE WEIGHT SHALL BE PROVIDED BY TC CONTRACTOR. ALL OTHER INFORMATION IDENTIFIED WITH LIGHT LINE WEIGHT SHALL BE PROVIDED BY OTHER TRADES.
5. ALL CONTROL SCHEMATICS AND WIRING DIAGRAMS ARE FOR THE CLARIFICATION OF EQUIPMENT INTERLOCKING FUNCTIONS AND THE INTERFACE OF VARIOUS CONTRACTORS'S WORK AND SHALL NOT BE MISTAKEN AS SHOP DRAWINGS FOR ACTUAL INSTALLATION.
6. TC CONTRACTOR SHALL PROVIDE DDC CONTROLLERS AS REQUIRED TO MEET INTENT OF DESIGN DOCUMENTS. REFER TO THE PLANS FOR THE DDC FUNCTIONS THAT APPLY TO EACH MECHANICAL SYSTEM.
7. ALL TC PROVIDED COMPONENTS AND ALL TC CONTRACTOR INSTALLED WIRING SHALL BE LABELED PER SPECIFICATIONS.
8. ALL WIRING AND SYSTEM CONTROL VOLTAGES SHALL BE IN ACCORDANCE WITH THE EQUIPMENT MANUFACTURER'S RECOMMENDATION AND THE ELECTRICAL SPECIFICATIONS.
9. VARIABLE FREQUENCY CONTROLLERS, FAN AND PUMP MOTOR STARTERS, STARTER WIRING, CONTROL VOLTAGE TRANSFORMERS AND ASSOCIATED POWER WIRING SHALL BE PROVIDED BY OTHER TRADES.
10. DUCT SMOKE DETECTORS SHALL BE FURNISHED, INSTALLED AND WIRED TO THE FIRE ALARM SYSTEM BY THE ELECTRICAL CONTRACTOR. ELECTRICAL SHALL PROVIDE FIRE ALARM SYSTEM CONTROL MODULES FOR REQUIRED SAFETIES TO MOTOR STARTERS OR VFCs AS INDICATED. CONTROL MODULES SHALL BE LOCATED NEAR RESPECTIVE MOTOR STARTERS OR VFCs. TC CONTRACTOR SHALL PROVIDE INTERLOCK WIRING FROM CONTROL MODULES TO MOTOR STARTERS OR VFCs.
11. ALL DDC AND CONTROL INTERLOCK WIRING SHALL BE BY TC CONTRACTOR UNLESS OTHERWISE NOTED. TC CONTRACTOR SHALL COORDINATE WITH VFC AND MOTOR STARTER SUPPLIERS TO DETERMINE EXACT WIRING REQUIREMENTS AND TERMINATION POINTS.
12. ALL DDC AND CONTROL INTERLOCK WIRING BETWEEN COMPONENTS SHALL BE INSTALLED WITHOUT INTERMEDIATE STOPS. WIRE SPLICING AT INTERMEDIATE TERMINAL STRIPS IS NOT ACCEPTABLE.
13. ALL ELECTRICAL WIRING AND RACEWAY SYSTEMS SHALL COMPLY WITH ELECTRICAL SPECIFICATION REQUIREMENTS. WHERE RACEWAY IS REQUIRED, TWO SEPARATE ELECTRICAL RACEWAY SYSTEMS SHALL BE PROVIDED: ONE FOR 120V WIRING AND THE OTHER FOR 24V WIRING.
14. TC CONTRACTOR SHALL BE RESPONSIBLE FOR ALL POWER SUPPLIES REQUIRED FOR TC SYSTEM UNLESS OTHERWISE NOTED. REFER TO ELECTRICAL PANEL SCHEDULES FOR SPARE CIRCUITS OR CIRCUITS DEDICATED TO TEMPERATURE CONTROLS. COORDINATE CIRCUIT USE WITH ELECTRICAL CONTRACTOR.
15. TC CONTRACTOR SHALL VERIFY EXACT LOCATION OF ALL FIELD MOUNTED COMPONENTS.
16. THERMOSTATS AND SPACE TEMPERATURE SENSORS SHALL BE MOUNTED 4'-0" ABOVE FINISHED FLOOR UNLESS NOTED OTHERWISE. PROVIDE GUARDS FOR SPACE TEMP SENSORS LOCATED IN PUBLIC AREAS.
17. TC CONTRACTOR SHALL PROVIDE AUXILIARY PANELS FOR REQUIRED PANEL MOUNTED EQUIPMENT SUCH AS RELAYS, TRANSDUCERS, CONTROL TRANSFORMERS, ETC. AUXILIARY PANELS SHALL BE LOCATED NEXT TO ASSOCIATED DDC PANEL.
18. REMOTELY MOUNTED FIELD DEVICES SUCH AS RELAYS, CONTROL TRANSFORMERS, ETC., SHALL BE HOUSED IN AN ENCLOSURE PROVIDED BY THE TC CONTRACTOR.
19. CONTROL TRANSFORMERS WHEN REQUIRED SHALL BE SIZED FOR 150% OF ACTUAL LOAD.
20. FREEZESTATS SHALL BE MOUNTED ON UPSTREAM FACE OF COOLING COILS. FREEZESTAT QUANTITY SHALL BE ONE PER 20 SQ. FT OF CROSS SECTIONAL AREA.
21. CURRENT SWITCHES USED FOR OPERATIONAL STATUS SHALL HAVE CURRENT THRESHOLD SETPOINT ADJUSTED TO INDICATE BELT OR DRIVE FAILURE.
22. ALL CONTROL VALVES, CONTROL DAMPERS AND ASSOCIATED CONTROL ACTUATORS IDENTIFIED ON TC DRAWINGS SHALL BE FURNISHED BY TC CONTRACTOR UNLESS OTHERWISE NOTED. DAMPER SIZE AND LOCATIONS ARE INDICATED ON MECHANICAL FLOOR PLAN DRAWINGS.
23. ALL CONTROL VALVES AND DAMPERS FURNISHED BY THE TC CONTRACTOR SHALL BE INSTALLED BY THE MECHANICAL CONTRACTOR. ALL PIPE PENETRATIONS AND BASIC FITTINGS REQUIRED FOR SENSOR INSTALLATIONS SHALL BE PROVIDED BY MECHANICAL CONTRACTOR.
24. DAMPER ACTUATORS SHALL BE INSTALLED BY TC CONTRACTOR.
25. ALL INSTRUMENTATION TUBING REQUIRED FOR DPS AND DPT COMPONENT INSTALLATIONS SHALL BE PROVIDED BY TC CONTRACTOR.
26. TC CONTRACTOR SHALL FIELD MOUNT ALL REQUIRED PACKAGED CONTROL COMPONENTS FURNISHED BY EQUIPMENT SUPPLIERS WHERE INDICATED. ALL REQUIRED 24V AND 120V FIELD WIRING SHALL BE PROVIDED BY TC CONTRACTOR UNLESS NOTED OTHERWISE. TC CONTRACTOR SHALL COORDINATE SPECIFIC SYSTEM WIRING REQUIREMENTS WITH PACKAGED EQUIPMENT SUPPLIERS.

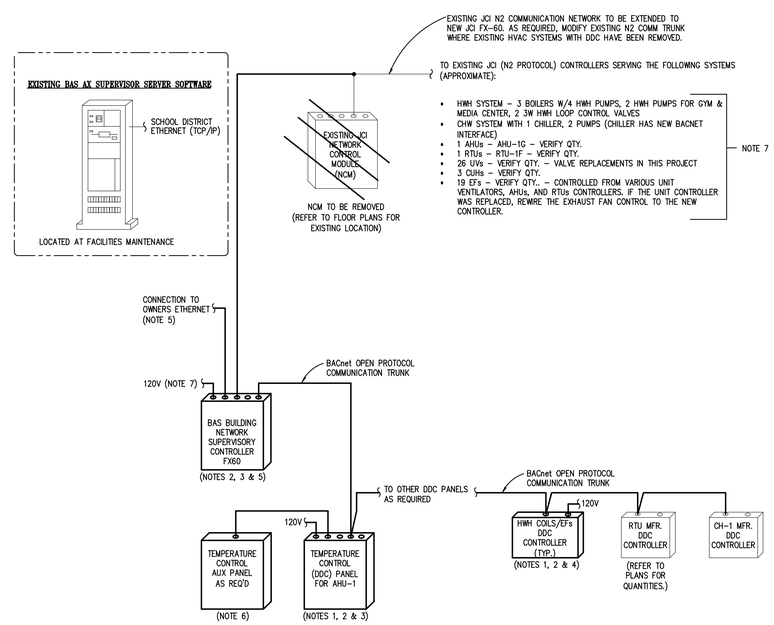

DDC SYSTEM ARCHITECTURE

NO SCALE

NOTES:

1. REFER TO TEMPERATURE CONTROL SCHEMATICS FOR THE REQUIRED POINTS ASSOCIATED FOR EACH SYSTEM.
2. TC CONTRACTOR SHALL DETERMINE DDC PANEL QUANTITY BASED ON POINT DENSITIES AND AVAILABLE MOUNTING SPACE. UNLESS SPECIFICALLY NOTED IN DESIGN DRAWINGS, TC CONTRACTOR SHALL LOCATE DDC PANELS AND COORDINATE WITH OTHER TRADES.
3. TC CONTRACTOR SHALL PROVIDE REQUIRED POWER SUPPLIES FROM SPARE CIRCUITS WHERE IDENTIFIED ON NEW ELECTRICAL PANEL SCHEDULES, FROM EXISTING TEMPERATURE CONTROL POWER CIRCUITS OR FROM EXISTING ELECTRICAL PANELBOARDS WHERE AVAILABLE AS FIELD DETERMINED. COORDINATE WITH ELEC CONTRACTOR. REFER TO ELECTRICAL DWGS FOR PANEL LOCATIONS.
4. TC CONTRACTOR SHALL PROVIDE 24V TRANSFORMERS REQUIRED FOR DDC CONTROLLERS AND OTHER CONTROLLERS AS REQUIRED. TRANSFORMERS SHALL BE LOCATED WITHIN EQUIPMENT ENCLOSURES OR OTHER TC PROVIDED ENCLOSURES TO BE LOCATED IN MECHANICAL OR ELECTRICAL ROOMS – COORDINATE LOCATIONS. MAXIMUM TRANSFORMER SIZE SHALL BE 100V.
5. BUILDING BAS NETWORK SUPERVISORY CONTROLLER SHALL BE CONNECTED TO THE SCHOOL DISTRICT ETHERNET. TC CONTRACTOR SHALL FURNISH AND INSTALL WIRING FOR DATA OUTLET FROM A BUILDING IT NETWORK RACK LOCATION. COORDINATE DATA OUTLET LOCATION, WIRING REQUIREMENTS, CONNECTION AND I/P ADDRESS WITH OWNER'S INFORMATION TECHNOLOGY PERSONNEL.
6. AUXILIARY PANEL FOR GAUGES, TRANSMITTERS, RELAYS, POWER TRANSFORMERS, ETC.
7. SCOPE OF WORK SHALL INCLUDE:
   7.1. INTEGRATION (DATABASE MIGRATION AND GRAPHICS DEVELOPMENT) FOR THE EXISTING DDC CONTROLLED HVAC SYSTEMS (THAT REMAIN) TO THE JCI FX-60 AND EXISTING REMOTE BUILDING AUTOMATION SYSTEM AX SUPERVISOR SERVER.
   7.2. INTEGRATION (DATABASE MIGRATION AND GRAPHICS DEVELOPMENT) FOR THE NEW WORK PROVIDED UNDER THIS PROJECT'S DDC CONTROLLED HVAC SYSTEMS TO THE JCI FX-60 AND EXISTING REMOTE BUILDING AUTOMATION SYSTEM AX SUPERVISOR SERVER.

WA
WAKELY ASSOCIATES, INC.
ARCHITECTS & ENGINEERS
30500 VAN DYKE AVE.
SUITE M-7
WARREN, MICHIGAN, 48093
TEL: 586-573-4100
FAX: 586-573-0822
E-MAIL: WA@WAKELYAIA.COM

Peter Basso Associates Inc
CONSULTING ENGINEERS
5145 Livernois, Suite 100
Troy, Michigan 48098-3276
Tel: 248-879-5668
Fax: 248-879-0007
www.PeterBassoAssociates.com
PBA Project No.: 2015-014

FARMINGTON PUBLIC SCHOOLS - 2015 BOND
2018 PROJECTS
KENBROOK & BEECHVIEW ELEMENTARY SCHOOLS

KENBROOK ELEMENTARY SCHOOL

TEMPERATURE CONTROL STANDARDS AND GENERAL NOTES

PRELIMINARY ☐
DESIGN DEVELOPMENT ☐
CONSTRUCTION ■
FINAL RECORD ☐

DRAWN BY: JRM
CHECKED BY: SVM

REVISIONS:

DATE: 12-15-17

SHEET NO.:
M8.1KB

JOB NO.: 171712A

g:\2015\2015-0144-00\Cad\kenbrook es\2015-0144-M8-CP.dwg, M8.1KB, 12/12/2017 2:27:27 PM, Suho A. Matti, _Default.pc3 J0.09699, Peter Basso Associates Inc.

TC GENERAL NOTES

TC GENERAL NOTES ON DRAWING M8.1LA APPLY TO THIS DRAWING.

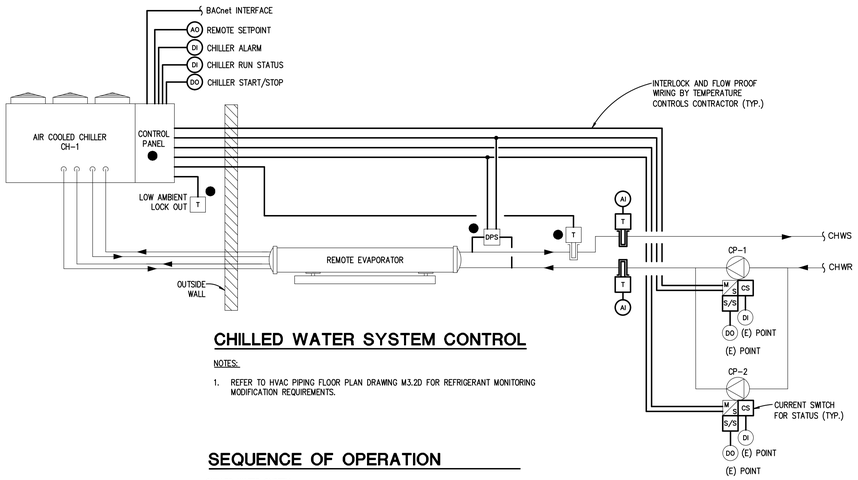

CHILLED WATER SYSTEM CONTROL

NOTES:

1. REFER TO HVAC PIPING FLOOR PLAN DRAWING M3.2D FOR REFRIGERANT MONITORING MODIFICATION REQUIREMENTS.

SEQUENCE OF OPERATION

CHILLED WATER SYSTEM:

1. ALL SETPOINTS, RESET SETPOINTS, DELAYS, TIME INTERVALS, AND DEADBANDS DESCRIBED IN SEQUENCE SHALL BE ADJUSTABLE BY SYSTEM OPERATORS. APPROPRIATE DEADBANDS SHALL BE USED TO PREVENT SHORT CYCLING SITUATIONS. ALL FAN AND PUMP MOTOR CONTROL SWITCHES SHALL BE IN "AUTO" POSITION.
2. CHILLER PACKAGED CONTROLS SHALL BE SET FOR REMOTE ENABLE FUNCTION BY OPERATORS.
3. CHILLED WATER SYSTEM OPERATION SHALL BE ENABLED BY DDC SYSTEM AUTOMATICALLY WHEN OA ENTHALPY IS GREATER THAN 23 BTU/LB AND THERE IS A DEMAND FOR CHW PRODUCTION. DDC SHALL DISABLE CH-1 WHEN OA ENTHALPY IS LESS THAN 21 BTU/LB.
4. THE CHW CIRCULATING PUMPS CP-1 & CP-2 SHALL HAVE START/STOP CAPABILITY FROM THE DDC SYSTEM. ONE OF THE TWO PUMPS SHALL BE ACTIVATED BY DDC WHEN SYSTEM IS ENABLED. THE OTHER WILL SERVE AS STANDBY.
5. DDC SHALL ALTERNATE PUMP OPERATION BASED ON RUNTIME HOURS OR AT THE BEGINNING OF EACH MONTH – OPERATOR SELECTABLE. ALTERNATION SHALL OCCUR AT BEGINNING OF NEXT CHILLER START CYCLE.
6. DDC SHALL MONITOR OPERATING STATUS OF EACH PUMP VIA CURRENT SWITCHES. UPON PUMP FAILURE, DDC SHALL ACTIVATE FAILURE ALARM AND AUTOMATICALLY START THE STANDBY PUMP. DDC SHALL TOTALIZE EACH PUMP'S RUN TIME HOURS OF OPERATION.
7. WHEN CHW FLOW IS PROVEN BY DIFFERENTIAL PRESSURE SWITCH WIRED IN SERIES WITH PARALLELED PUMP AUXILIARY CONTACTS, CHILLER INTERLOCKS ARE COMPLETE AND THE CHILLER PACKAGED CONTROL PANEL WITH INTEGRAL TEMPERATURE SENSOR SHALL SEQUENCE CHILLER OPERATION TO MAINTAIN THE CHILLER'S CHW SUPPLY SETPOINT OF 42°F (ADJUSTABLE AT CHILLER PANEL OR FROM REMOTE SETPOINT ADJUSTMENT THRU DDC).
8. DDC SHALL MONITOR OTHER CHILLER POINTS VIA BACNET INTERFACE. ALLOW FOR TEN ADDITIONAL POINTS OF INFORMATION AT THE BAS GRAPHIC.
9. DDC SHALL KEEP PUMP CP-3 ACTIVATED FOR 5 MINUTES AFTER CHILLER SHUTDOWN CYCLE IS ACTIVATED.
10. REFRIGERANT MONITOR SHALL LOCKOUT CHILLER OPERATION WHEN A REFRIGERANT LEAK IS DETECTED.
11. DDC SHALL PREVENT SHORT CYCLING OF CHILLER WITH A 20 MINUTE INTERVAL BETWEEN CHILLER SHUTDOWN AND CHILLER RESTART.

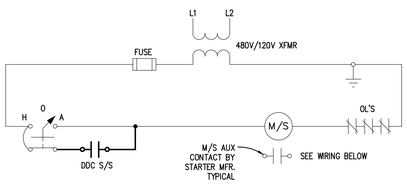

CHW PUMPS CP-1 & 2 M/S WIRING

TYPICAL

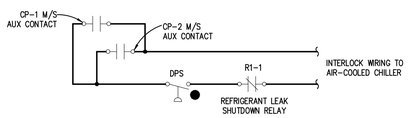

CH-1 INTERLOCK WIRING

CAUTION

DO NOT ENTER WHEN THIS ALARM IS FLASHING. IT COULD INDICATE A REFRIGERANT RELEASE IN THIS ROOM. PLEASE CALL SCHOOL DISTRICT REPRESENTATIVES AND REPORT THIS ALARM IMMEDIATELY.

REFRIGERANT LEAK SIGN DETAIL

NO SCALE

NOTES:

1. PROVIDE SIGN WITH WHITE LETTERING ON RED BACKGROUND, POLYVINYL PLASTIC, 11" WIDE X 8-1/2" HIGH. ENGRAVED LETTERS SHALL BE MINIMUM 1/2" LETTER HEIGHT. SECURE TO WALL OR DOOR APPROPRIATELY.
2. ONE SIGN REQUIRED AT EACH DOOR INTO/OUT OF THE MECHANICAL ROOM A141. REFER TO DWGS FOR LOCATIONS.

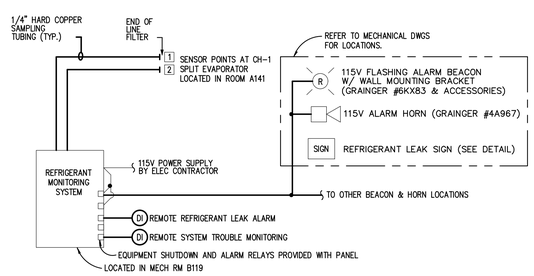

REFRIGERANT MONITORING SYSTEM

NO SCALE

GENERAL NOTES:

1. TC CONTRACTOR SHALL PROVIDE REFRIGERANT MONITORING SYSTEM FOR REFRIGERANT TYPE AS SPECIFIED AND INSTALL PER MANUFACTURER'S RECOMMENDATIONS.
2. TC CONTRACTOR SHALL PROVIDE BEACONS AND HORNS AND PROVIDE ALL WIRING TO DEVICES.
3. TC CONTRACTOR SHALL PROVIDE PANEL INTERFACE AND WIRING TO CHW SYSTEM DDC PANEL.
4. ELECTRICAL CONTRACTOR SHALL PROVIDE DEDICATED 115V POWER SUPPLY TO REFRIGERANT MONITORING PANEL WHICH SHALL ALSO BE USED TO POWER BEACONS AND HORNS. ELECTRICAL CONTRACTOR SHALL PROVIDE JUNCTION BOX AT MONITORING PANEL IF NECESSARY.
5. ELECTRICAL CONTRACTOR SHALL PROVIDE LOCKING BREAKER TO PREVENT ACCIDENTAL SHUTOFF OF SYSTEM.

SEQUENCE OF OPERATION:

1. REFER TO 15970 REFRIGERANT MONITORING SPECIFICATION FOR DETAILS.
2. REFRIGERANT MONITORING SYSTEM TROUBLE STATUS SHALL BE MONITORED BY DDC SYSTEM.
3. REFRIGERANT MONITORING SYSTEM ALARM SHALL BE MONITORED BY DDC SYSTEM.
4. WHEN THE REFRIGERANT MONITORING SYSTEM ALARM IS ACTIVATED, THE REFRIGERANT MONITORING SYSTEM ACTIVATES THE MECHANICAL ROOM VENTILATION PURGE MODE. UPON ACTIVATION THROUGH DDC, DDC SHALL SHUTDOWN CHILLER IN AN ORDERLY MANNER, TURN OFF THE OPERATING PUMP, AND PROVIDE BAS WITH AN EMERGENCY REFRIGERANT LEAK ALARM.
5. DDC MONITORS THE REFRIGERANT MONITOR, AND WHEN A HIGH LEVEL ALARM OCCURS, DDC SHALL COMMAND THE EXHAUST FAN TO HIGH CFM SETTING (PURGE MODE) AND CYCLE THE UNIT HEATER ON/OFF AS NEEDED. PURGE MODES REMAINS ACTIVE UNTIL THE REFRIGERANT MONITOR IS RESET AND THE ALARM IS DEACTIVATED.
6. THE MECHANICAL ROOM VENTILATION RETURNS TO NORMAL OPERATION WHEN THE REFRIGERANT MONITORING SYSTEM ALARM IS MANUALLY RESET.

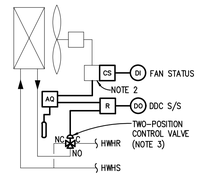

UH-1 CONTROL

SERVES B119

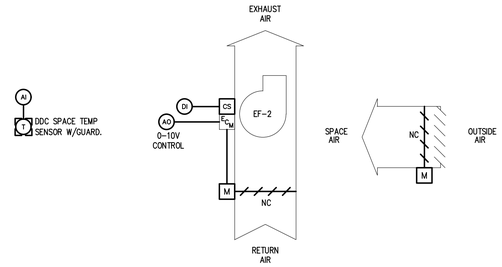

EF-2 ECM CONTROL

SERVES B119

B119 VENT/PURGE/HEATING CONTROL

TYPICAL

NOTES:

1. REFER TO FLOOR PLANS FOR ROOM B119 EQUIPMENT.
2. AQUASTAT SHALL BE WIRED IN SERIES WITH FAN CONTROL WIRING CIRCUIT.
3. CONTROL VALVE MANUFACTURER/MODEL SHALL BE SCHNEIDER ELECTRIC (FORMERLY ERIE) / VM SERIES POPTOP ZONE VALVES WITH AP23A000 MODEL ACTUATOR WITH APPROPRIATE CONTROL SIGNAL TO INTERFACE WITH NEW CONTROLLER.

SEQUENCE OF OPERATION:

1. ALL SETPOINTS, RESET SETPOINTS, DELAYS, TIME INTERVALS, AND DEADBANDS DESCRIBED IN SEQUENCE SHALL BE ADJUSTABLE BY SYSTEM OPERATORS. APPROPRIATE DEADBANDS SHALL BE USED TO PREVENT SHORT CYCLING SITUATIONS. ALL FAN MOTOR CONTROL SWITCHES SHALL BE IN "AUTO" POSITION.
2. REFER TO MECHANICAL SCHEDULE FOR LOW AND HIGH CFM SETTINGS FOR EF-2.
3. DDC SHALL MONITOR DDC ROOM TEMP SENSOR AND COMMAND EF-2 ON AT LOW CFM SETTING WHEN SPACE TEMP INCREASES ABOVE 78°F SETPOINT AND OFF WHEN SPACE TEMP DECREASES BELOW 75°F SETPOINT.
4. DDC SHALL MONITOR DDC ROOM TEMP SENSOR AND ENABLE/DISABLE UNIT
N HEATER FAN CIRCUIT AND OPEN/CLOSE HEATING VALVE AS REQUIRED TO MAINTAIN SPACE TEMP SETPOINT OF 68°F DURING BLDG OCCUPANCY AND 55°F DURING BLDG UNOCCUPANCY. FAN SHALL ACTIVATE UPON PROOF OF HWHR FLOW BY AQUASTAT. AQUASTAT SHALL PROVIDE 4°F DEADBAND MINIMUM. DDC SHALL PROVIDE 2°F DEADBAND FOR BOTH SETPOINTS.
5. DDC SHALL MONITOR THE UNIT HEATER AND EXHAUST FANS OPERATION WITH CURRENT SWITCHES. ABNORMAL OPERATING STATUS SHALL ACTIVATE AN
H ALARM. DDC SHALL TOTALIZE RUN TIME HOURS OF OPERATION FOR BOTH.
6. DDC MONITORS THE REFRIGERANT MONITOR, AND WHEN A HIGH LEVEL ALARM OCCURS, DDC SHALL COMMAND THE EXHAUST FAN TO HIGH CFM SETTING (PURGE MODE) AND CYCLE THE UNIT HEATER ON/OFF AS NEEDED. PURGE MODES REMAINS ACTIVE UNTIL THE REFRIGERANT MONITOR IS RESET AND THE ALARM IS DEACTIVATED.

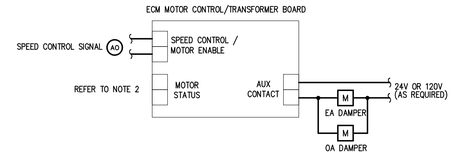

EF-2 ECM WIRING

NOTES:

1. WIRING DETAIL IDENTIFIES INTENT AND DOES NOT INDICATE ACTUAL WIRING REQUIREMENTS. CONSULT WITH ECM SUPPLIER FOR THE ACTUAL WIRING REQUIREMENTS.
2. MOUNT CURRENT SENSOR ON MOTOR LEADS FOR STATUS MONITORING.

SEQUENCE OF OPERATION:

1. REFER TO REFRIGERANT MONITORING SEQUENCE OF OPERATION.

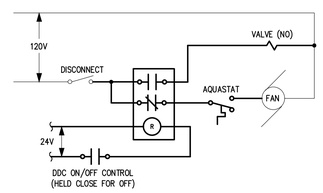

HWH UH-1 WIRING

NOTES:

1. MOUNT CURRENT SENSOR ON MOTOR LEADS FOR STATUS MONITORING.

SEQUENCE OF OPERATION:

1. REFER TO REFRIGERANT MONITORING SEQUENCE OF OPERATION.

WAKELY ASSOCIATES, INC.
ARCHITECTS & ENGINEERS
30500 VAN DYKE AVE.
SUITE M-7
WARREN, MICHIGAN, 48093
TEL. 586-573-4100
FAX. 586-573-0822
E-MAIL: WA@WAKELYAIA.COM

Peter Basso Associates Inc
CONSULTING ENGINEERS
5145 Livernois, Suite 100
Troy, Michigan 48098-3276
Tel: 248-879-5668
Fax: 248-879-0007
www.PeterBassoAssociates.com
PBA Project No. 2015-0144

FARMINGTON PUBLIC SCHOOLS - 2015 BOND
2018 PROJECTS
KENBROOK & BEECHVIEW ELEMENTARY SCHOOLS

KENBROOK ELEMENTARY SCHOOL

TEMPERATURE CONTROLS

PRELIMINARY ☐
DESIGN DEVELOPMENT ☐
CONSTRUCTION ■
FINAL RECORD ☐

DRAWN BY: JRM
CHECKED BY: SVM

REVISIONS:

DATE: 12-15-17

SHEET NO.:

M8.2KB

JOB NO.: 171712A

g:\2015\2015-0144-00\Cad\kenbrook es\2015-0144-M8-CP.dwg, M8.2KB, 12/12/2017 2:27:28 PM, Suha A. Matti, _Default.pc3 ,0.09699, Peter Basso Associates Inc.

TC GENERAL NOTES

TC GENERAL NOTES ON DRAWING M8.1LA APPLY TO THIS DRAWING.

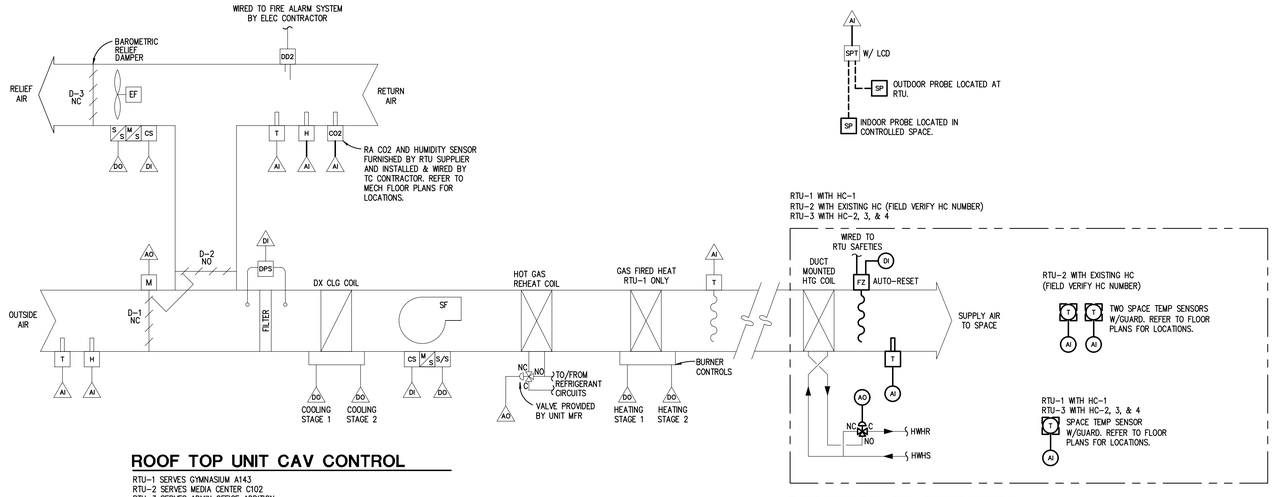

ROOF TOP UNIT CAV CONTROL

RTU-1 SERVES GYMNASIUM A143
RTU-2 SERVES MEDIA CENTER C102
RTU-3 SERVES ADMIN OFFICE ADDITION

NOTES:

1. ELECTRICAL CONTRACTOR SHALL PROVIDE FIRE ALARM SYSTEM COMPONENTS AND WIRING FROM FIRE ALARM PANEL TO CONTROL MODULE. TC CONTRACTOR SHALL PROVIDE WIRING FROM CONTROL MODULE TO MOTOR STARTER CONTROL CIRCUIT.
2. RTU TO BE PROVIDED WITH PACKAGED CONTROLS AND BACNET COMPATIBLE CARD.

RTU-1, -2, & -3 SEQUENCE OF OPERATION

ROOFTOP UNIT CONTROL:

1. MANUFACTURER'S RTU DDC CONTROLLER AND CONTROL SEQUENCE OF OPERATION (HEREIN CALLED RTU) MAY VARY SLIGHTLY FROM THE RECOMMENDED SEQUENCE SHOWN BELOW. MANUFACTURER'S REPRESENTATIVE SHALL DOCUMENT THESE VARIATIONS IN THE SUBMITTAL PACKAGE.

SEQUENCE OF OPERATION:

1. ALL SETPOINTS, RESET SETPOINTS, DELAYS, TIME INTERVALS, AND DEADBANDS DESCRIBED IN SEQUENCE SHALL BE ADJUSTABLE BY SYSTEM OPERATORS. APPROPRIATE DEADBANDS SHALL BE USED TO PREVENT SHORT CYCLING SITUATIONS. ALL FAN AND PUMP MOTOR CONTROL SWITCHES SHALL BE IN "AUTO" POSITION.
2. SUPPLY FAN AND EXHAUST FAN SHALL HAVE START/STOP CAPABILITY FROM THE BAS THRU THE RTU CONTROLLER. RTU CONTROLLER SHALL MAINTAIN BAS TIME-SCHEDULED OCCUPIED MODE (COMPENSATED BY OPTIMUM START PROGRAM), TEMPORARY OCCUPIED MODE (SET FOR 1-HR. ENABLED FROM OVERRIDE SWITCH ON TEMPERATURE SENSOR), AND UNOCCUPIED CYCLE MODE FROM HEATING/COOLING SETPOINTS AS DOWNLOADED FROM THE BAS.
3. SUPPLY FAN AND EXHAUST FAN STATUS SHALL BE MONITORED BY DDC THRU RESPECTIVE CURRENT SWITCHES. ABNORMAL STATUS CONDITION SHALL ACTIVATE ALARM. RTU SHALL TOTALIZE RUN TIME HOURS OF OPERATION FOR BOTH FANS.
4. RTU CONTROLLER SHALL CONTROL THE DISCHARGE AIR TEMPERATURE SETPOINT. DUCT-MOUNTED HEATING COILS SHALL CONTROL THESPACE TEMPERATURE SETPOINT. OUTSIDE AND RETURN AIR DAMPERS SHALL BE ALLOWED TO MODULATE AS DESCRIBED. IN OPTIMUM START MODE, RTU SHALL MAINTAIN 72°F DAT SETPOINT AND IN COOLING MODE 55°F DAT SETPOINT UNTIL SPACE TEMPERATURE SETPOINT (FROM BACNET) OR OCCUPIED MODE IS REACHED.
5. IN HEATING MODE, RTU SHALL DEACTIVATE DX COOLING AND HOT-GAS REHEAT CONTROL, MODULATE DAMPERS TO THE MINIMUM OA POSITION, AND MAINTAIN DAT SETPOINT WITH ECONOMIZER CONTROL. SEE DEHUMIDIFICATION CONTROL HEREIN.
6. IN COOLING MODE, RTU SHALL COMPARE OA ENTHALPY WITH RA ENTHALPY TO PERFORM ECONOMIZER OPERATION. WHEN OA ENTHALPY IS LESS THAN RA ENTHALPY AND OA HUMIDITY IS LESS THAN 60% RH, RTU CONTROLLER SHALL MODULATE DAMPERS MORE OPEN TO OUTSIDE AIR AS 1ST STAGE OF COOLING TO MAINTAIN DAT SETPOINT. WHEN OA DAMPERS ARE FULLY OPEN AND DAT IS STILL ABOVE SETPOINT, RTU SHALL STAGE DX COOLING CONTROL TO MAINTAIN DAT SETPOINT. HOT-GAS REHEAT CONTROL SHALL REMAIN OFF. SEE DEHUMIDIFICATION CONTROL HEREIN.
7. IN COOLING MODE, RTU SHALL COMPARE OA ENTHALPY WITH RA ENTHALPY TO PERFORM ECONOMIZER OPERATION. WHEN OA ENTHALPY IS GREATER THAN RA ENTHALPY OR OA HUMIDITY IS GREATER THAN 60% RH, RTU CONTROLLER SHALL MODULATE DAMPERS TO MINIMUM OA POSITION AND STAGE DX COOLING TO MAINTAIN DAT SETPOINT. HOT-GAS REHEAT CONTROL MAY BE USED TO MAINTAIN DAT SETPOINT. SEE DEHUMIDIFICATION CONTROL HEREIN.
8. DEHUMIDIFICATION CONTROL: DURING OCCUPIED MODE, RTU SHALL MONITOR RETURN AIR HUMIDITY. WHEN RETURN AIR HUMIDITY RISES ABOVE 55% RH SETPOINT, RTU SHALL STAGE DX COOLING CONTROL ON (IF NOT ALREADY ACTIVATED) TO DEHUMIDIFY THE AIR AND MODULATE HOT-GAS REHEAT COIL VALVE TO REHEAT THE DEHUMIDIFIED AIR TO MAINTAIN COIL LEAVING TEMPERATURE SETPOINT OF 54°F. IF THE HOT-GAS REHEAT COIL CANNOT MAINTAIN DAT SETPOINT AFTER A 5 MINUTE DELAY, RTU SHALL STAGE GAS-FIRED HEATING CONTROLS TO MAINTAIN DAT SETPOINT. RTU SHALL DEHUMIDIFY THE SPACE UNTIL RA HUMIDITY IS LESS THAN 51% RH SETPOINT.
9. RTU ECONOMIZER CONTROL SHALL ACTIVATE AND MODULATE THE POWERED EXHAUST FAN THRU FAN ECM AS REQUIRED BASED ON SPACE STATIC PRESSURE SETPOINT (DETERMINED BY TAB CONTRACTOR) TO MAINTAIN SPACE SLIGHTLY POSITIVE. WHEN RTU IS DEACTIVATED OR OPERATING IN UNOCCUPIED CYCLE MODE OR MORNING WARM-UP MODE, OA DAMPER SHALL REMAIN CLOSED AND EXHAUST FAN SHALL REMAIN OFF.
10. DISCHARGE AIR TEMP SETPOINT SHALL BE BASED ON THE FOLLOWING OUTDOOR AIR TEMP RESET SCHEDULE:

OAT	DAT
≤ 30°F	60°F
≥ 50°F	55°F

11. DUCT SMOKE DETECTOR(S) SHALL DEACTIVATE RTU (SF) WHEN PRODUCTS OF COMBUSTION ARE DETECTED.
12. FILTER STATUS SHALL BE MONITORED BY RTU THRU DIFFERENTIAL PRESSURE SWITCH. MANUFACTURER SHALL SET DPS SETPOINT BASED ON FILTER MANUFACTURER'S LOADED DATA.
13. WHEN RTU IS DEACTIVATED, SF/EF SHALL SHUT DOWN, OA DAMPER SHALL CLOSE, AND DX COOLING, HOT-GAS REHEAT, AND GAS-FIRED HEATING CONTROLS SHALL REMAIN OFF.
14. FOR UNOCCUPIED NIGHT CYCLE CONTROL, RTU SHALL CYCLE BASED ON SPACE TEMPERATURE. RTU ENERGIZES SF ONLY (EXHAUST FAN REMAINS OFF), MIXED AIR DAMPERS REMAIN CLOSED TO OUTSIDE AIR, GAS-FIRED HEATING ONLY SHALL CONTROL. RTU SHALL PROVIDE 2°F DEADBAND FOR UNOCCUPIED SPACE TEMP SETPOINT CONTROL.
15. BAS SHALL BE CAPABLE OF ADDITIONAL RTU MONITORING VIA BACNET OPEN PROTOCOL COMMUNICATION LINK AS INDICATED ON DETAIL.

SEQUENCE OF OPERATION

NOTE:

1. REPLACE (E)HC CONTROL VALVE FOR THE MEDIA CENTER WITH AN ELECTRIC CONTROL VALVE SUITABLE FOR DDC CONTROL.

SEQUENCE:

1. ALL SETPOINTS INCLUDING RESET SCHEDULE SETPOINTS DESCRIBED IN SEQUENCE SHALL BE ADJUSTABLE BY SYSTEM OPERATORS (CREATE REQUIRED VIRTUAL POINTS). APPROPRIATE DEADBANDS SHALL BE USED TO PREVENT SHORT CYCLING SITUATIONS.
2. DDC SHALL HAVE OCCUPIED/UNOCCUPIED CONTROL CAPABILITY FOR EACH DUCT-MOUNTED HEATING COIL AS SCHEDULED AND COMMANDED THRU THE BAS.
3. RTU-1 & 3: DDC SHALL MODULATE THE DUCT-MOUNTED HEATING COIL VALVE TO MAINTAIN SPACE TEMPERATURE SETPOINTS. DDC SHALL PROVIDE HIGH LIMIT CONTROL OF DUCT-MOUNTED HEATING COIL DISCHARGE AIR TEMP SENSOR AT 90°F SETPOINT.
4. RTU-2 HC ONLY: DDC SHALL MODULATE THE DUCT-MOUNTED HEATING COIL VALVE TO MAINTAIN AVERAGE SPACE TEMPERATURE SETPOINTS USING TWO ROOM TEMP SENSORS. DDC SHALL PROVIDE HIGH LIMIT CONTROL OF DUCT-MOUNTED HEATING COIL DISCHARGE AIR TEMP SENSOR AT 90°F SETPOINT.
5. SPACE TEMPERATURE SETPOINTS SHALL BE AS FOLLOWS:
   - HEATING UNOCCUPIED SETPOINT = 62°F
   - HEATING OCCUPIED SETPOINT = 70°F
   - COOLING OCCUPIED SETPOINT = 75°F
   - COOLING UNOCCUPIED SETPOINT = N/A
6. FREEZESTAT(S) LOCATED AFTER DUCT-MOUNTED HEATING COILS SHALL DEACTIVATE SUPPLY FAN WHEN TEMPERATURE IS 35°F OR BELOW. DDC SHALL MONITOR FREEZESTAT STATUS AND ACTIVATE ALARM IF CONDITION OCCURS.
7. WHEN THE ASSOCIATED RTU IS OFF (AS POLLED THROUGH BACNET), DDC SHALL MODULATE THE HEATING COIL VALVE TO MAINTAIN 50°F AT DUCT TEMP SENSOR.

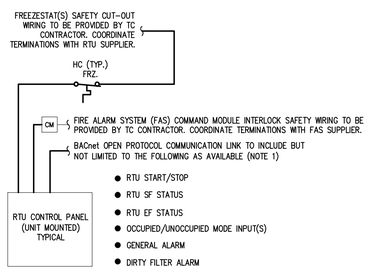

- RTU START/STOP
- RTU SF STATUS
- RTU EF STATUS
- OCCUPIED/UNOCCUPIED MODE INPUT(S)
- GENERAL ALARM
- DIRTY FILTER ALARM
- DISCHARGE AIR LOW-LIMIT ALARM
- SAFETY CUT-OUT ALARM
- OCCUPIED MODE DAT SETPOINT
- UNOCCUPIED MODE ZONE HEATING SETPOINT
- UNOCCUPIED MODE ZONE COOLING SETPOINT
- OUTDOOR AIR TEMPERATURE/HUMIDITY
- RETURN AIR TEMPERATURE/HUMIDITY
- SUPPLY AIR TEMPERATURE
- SPACE TEMP (WRITE POINT FROM BAS)
- OUTDOOR AIR DAMPER MINIMUM SETPOINT
- MIXED AIR DAMPER POSITION
- COOLING MODE STATUS
- COOLING MODE OUTPUT
- ECONOMIZER STATUS
- DEHUMIDIFICATION MODE STATUS
- HOT-GAS REHEAT CONTROL PERCENTAGE
- ECONOMIZER STATUS
- MINIMUM OA SETPOINT

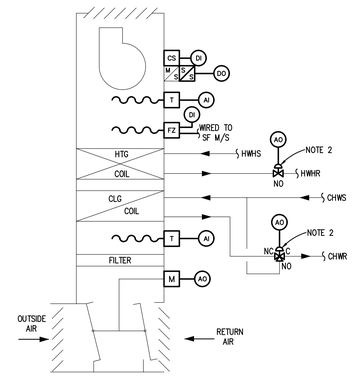

NEW VERTICAL UNIT VENTILATOR CONTROL

TYPICAL

NOTE:

1. REFER TO FLOOR PLANS FOR UNIT AND SPACE TEMP SENSOR LOCATIONS.
2. CONTROL VALVE MANUFACTURER/MODEL SHALL BE SCHNEIDER ELECTRIC (FORMERLY ERIE) / VM SERIES POPTOP ZONE VALVES WITH AP23A000 MODEL ACTUATOR WITH APPROPRIATE CONTROL SIGNAL TO INTERFACE WITH NEW DDC CONTROLLER.
3. UNITS ARE FLOOR MOUNTED OR CEILING RECESSED, REFER TO MECHANICAL SCHEDULES AND EQUIPMENT SUBMITTALS.

SEQUENCE OF OPERATION

UNIT VENTILATOR (TYPICAL):

1. ALL SETPOINTS INCLUDING RESET SCHEDULE SETPOINTS, DELAYS, TIME INTERVALS, AND DEADBANDS DESCRIBED IN SEQUENCE SHALL BE ADJUSTABLE BY SYSTEM OPERATORS. APPROPRIATE DEADBANDS SHALL BE USED TO PREVENT SHORT CYCLING SITUATIONS. ALL MOTOR CONTROL SWITCHES SHALL BE IN "AUTO" POSITION
2. SUPPLY FAN SHALL HAVE START/STOP CAPABILITY FROM THE DDC SYSTEM. UNIT SHALL OPERATE BASED ON TIME SCHEDULED OCCUPIED MODE AND SETPOINTS FROM BAS, TEMPORARY OCCUPIED MODE (SET FOR 1-HR. ENABLED FROM OVERRIDE SWITCH ON TEMPERATURE SENSOR), AND UNOCCUPIED CYCLE MODE.
3. UNITS MAY USE ECM OR PSC MOTORS, REFER TO EQUIPMENT SUBMITTALS FOR DETAILS.
4. FOR HEATING OCCUPIED MODE, UV SHALL BE CONTROLLED TO MAINTAIN SPACE TEMP SETPOINT OF 70°F.
5. FOR COOLING OCCUPIED MODE, UV SHALL BE CONTROLLED TO MAINTAIN SPACE TEMP SETPOINT OF 75°F.
6. FOR HEATING UNOCCUPIED MODE, UV SHALL CYCLE ON & OFF TO MAINTAIN A SETBACK SPACE TEMP SETPOINT OF 62°F.
7. FOR COOLING UNOCCUPIED MODE, UV SHALL REMAIN OFF.
8. SUPPLY FAN STATUS SHALL BE MONITORED BY DDC THRU CURRENT SWITCH. ABNORMAL STATUS CONDITION FOR SF SHALL ACTIVATE ALARM. DDC SHALL TOTALIZE FAN RUNTIME HOURS OF OPERATION.
9. WHEN UV IS ACTIVATED DURING OCCUPIED MODE, MIXED AIR DAMPER SHALL BE ALLOWED TO MODULATE AS DESCRIBED. WHEN UV IS DEACTIVATED OR OPERATING IN UNOCCUPIED CYCLE MODE OR MORNING WARM-UP MODE, MIXED AIR DAMPER SHALL REMAIN CLOSED (OUTSIDE AIR DAMPER FULLY CLOSED AND RETURN AIR DAMPER FULLY OPEN).
10. DDC SHALL PROVIDE MIXED AIR TEMP LOW LIMIT OVERRIDE CONTROL SETPOINT OF 45°F. DDC SHALL MODULATE MIXED AIR DAMPERS BELOW THE MINIMUM OA DAMPER POSITION TO MAINTAIN SETPOINT.
11. WHEN SPACE TEMP IS BELOW HEATING SETPOINT, DDC SHALL MODULATE OUTSIDE & RETURN AIR DAMPERS TOWARDS MINIMUM OA POSITION, THEN COMMAND CONVECTOR VALVES OPEN AS FIRST STAGE OF HEAT. IF ROOM TEMP IS BELOW HEATING SETPOINT FOR MORE THAN 5 MINUTES (ADJ.), DDC SHALL MODULATE VUV HEATING COIL CONTROL VALVE TO MAINTAIN DISCHARGE AIR TEMPERATURE SETPOINT THAT SHALL BE RESET BASED ON DEVIATION FROM SPACE TEMP SETPOINT. HEATING MODE DISCHARGE AIR TEMP SETPOINT RANGE SHALL BE 65°F SETPOINT TO 85°F SETPOINT.
12. WHEN SPACE TEMP IS ABOVE COOLING SETPOINT AND OA TEMP IS LESS THAN SPACE TEMP AND OA HUMIDITY IS LESS THAN 60% RH SETPOINT, DDC SHALL MODULATE DAMPER OA ECONOMIZER IN SEQUENCE WITH COOLING COIL CONTROL VALVE TO MAINTAIN SPACE TEMP SETPOINT.
13. WHEN SPACE TEMP IS ABOVE COOLING SETPOINT AND OA TEMP IS GREATER THAN SPACE TEMP OR OA HUMIDITY IS GREATER THAN 60% RH SETPOINT, DAMPERS SHALL REMAIN AT MINIMUM OA POSITION AND DDC SHALL CONTROL SHALL MODULATE VUV COOLING COIL CONTROL VALVE TO MAINTAIN SPACE TEMP SETPOINT.
14. DDC SHALL PREVENT HEATING AND COOLING SIMULTANEOUSLY.
15. FREEZESTAT SHALL DEACTIVATE SF WHEN SENSED TEMP IS 35°F OR BELOW. UPON CUT-OUT, DDC SYSTEM SHALL FULLY CLOSE OA DAMPER, FULLY OPEN HWH COIL VALVE, BAS LOW-LIMIT FREEZESTAT ALARM SHALL BE ACTIVATED, AND DDC SOFTWARE LOCKOUT SHALL HOLD UNIT OFF UNTIL IT IS RESET BY OPERATOR FROM GRAPHICAL INTERFACE FOR UNIT.
16. WHEN UV IS DEACTIVATED, SF TURNS OFF, MIXED AIR DAMPER CLOSES TO OUTSIDE AIR, AND CHW COOLING COIL VALVE CLOSES TO THE COIL. DDC SHALL CYCLE CONVECTOR HEATING VALVES ON/OFF TO MAINTAIN UNOCCUPIED HEATING SETPOINT. IF ROOM TEMP IS LESS THAN SETPOINT FOR MORE THAN 15 MINUTES (ADJ.), THEN DDC SHALL CYCLE THE VUV ON/OFF TO MAINTAIN UNOCCUPIED ROOM TEMP SETPOINT. WHEN VUV IS OFF, AND OA TEMP IS BELOW 45°F, DDC SHALL MODULATE HWH COIL CONTROL VALVE BASED ON DISCHARGE AIR TEMP TO MAINTAIN LOW LIMIT PLENUM TEMP SETPOINT OF 50°F. DDC SHALL PROVIDE 2°F DEADBAND FOR UNOCCUPIED HEATING SETPOINT CONTROL.

T — SPACE SENSOR WITH +/- SETPOINT ADJUSTMENT & OCCUPANCY OVERRIDE SW REFER TO FLOOR PLANS FOR LOCATION)

NOTES:

1. REFER TO MECHANICAL FLOOR PLANS FOR EXISTING CNV QUANTITIES AND LOCATIONS TO BE CONTROLLED WITH NEW VUV.
2. USE 1/2", 2-POSITION, 2W VALVE W/ACTUATOR COMPATIBLE WITH DDC CONTROLLER.
3. CONTROL VALVE MANUFACTURER/MODEL SHALL BE SCHNEIDER ELECTRIC (FORMERLY ERIE) / VM SERIES POPTOP ZONE VALVE.

WAKELY ASSOCIATES, INC.
ARCHITECTS & ENGINEERS

30500 VAN DYKE AVE.
SUITE M-7
WARREN, MICHIGAN, 48093

TEL. 586-573-4100
FAX. 586-573-0822
E-MAIL: WA@WAKELYAIA.COM

Peter Basso Associates Inc
CONSULTING ENGINEERS
5145 Livernois, Suite 100
Troy, Michigan 48098-3276
Tel: 248-879-5668
Fax: 248-879-0007
www.PeterBassoAssociates.com
PBA Project No.: 2015-0144

FARMINGTON PUBLIC SCHOOLS - 2015 BOND
2018 PROJECTS
KENBROOK & BEECHVIEW ELEMENTARY SCHOOLS

KENBROOK ELEMENTARY SCHOOL

TEMPERATURE CONTROLS

PRELIMINARY ☐
DESIGN DEVELOPMENT ☐
CONSTRUCTION ■
FINAL RECORD ☐

DRAWN BY: JRM
CHECKED BY: SVM

REVISIONS:

DATE: 12-15-17

SHEET NO.:

M8.3KB

JOB NO.: 171712A

g:\2015\2015-0144-00\Cad\kenbrook es\2015-0144-M8-CP.dwg, M8.3KB, 12/12/2017 2:27:30 PM, Suha A. Matti, _Default.pc3 ,0.09699, Peter Basso Associates Inc.

TC GENERAL NOTES

TC GENERAL NOTES ON DRAWING M8.1LA APPLY TO THIS DRAWING.

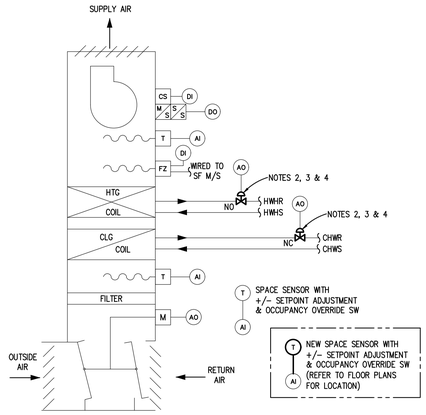

EXISTING CONSOLE UNIT VENTILATOR CONTROL CONTROL VALVE REPLACEMENTS & MISC

TYPICAL

NOTE:

1. REFER TO FLOOR PLANS FOR QUANTITY OF EXISTING UNITS AND LOCATIONS.
2. TEMPERATURE CONTROLS WORK SCOPE AT EXISTING UNIT VENTILATORS IS TO REPLACE THE EXISTING 2-WAY HOT WATER HEATING AND 2-WAY CHILLED WATER CONTROL VALVES AND ACTUATORS. EXISTING UNIT VENTILATOR CONTROLLER AND PROGRAMMING SEQUENCE TO REMAIN (COMPONENTS/POINTS INDICATED IN DETAIL MAY NOT REPRESENT ACTUAL EXISTING CONTROL).
3. TC CONTRACTOR SHALL FIELD VERIFY EXISTING CONTROL VALVE PIPING CONFIGURATION AND SELECT CONTROL VALVES BASED ON EXISTING Cv VALUES OR BASED ON FLOW READINGS TAKEN BY TAB CONTRACTOR PRIOR TO PROJECT DEMOLITION REQUIREMENTS.
4. CONTROL VALVE MANUFACTURER/MODEL SHALL BE SCHNEIDER ELECTRIC (FORMERLY ERIE) / VM SERIES POPTOP ZONE VALVES WITH AP23A000 MODEL ACTUATOR WITH APPROPRIATE CONTROL SIGNAL TO INTERFACE WITH EXISTING DDC CONTROLLER.

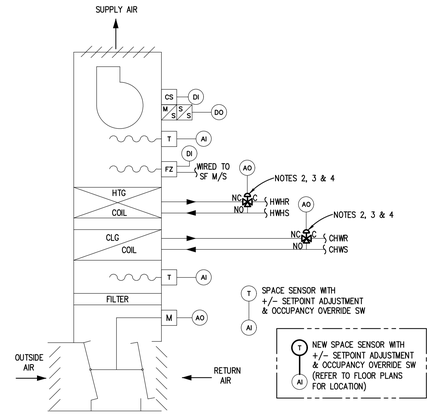

EXISTING CONSOLE UNIT VENTILATOR CONTROL CONTROL VALVE REPLACEMENTS & MISC

TYPICAL

NOTE:

1. REFER TO FLOOR PLANS FOR QUANTITY OF EXISTING UNITS AND LOCATIONS.
2. TEMPERATURE CONTROLS WORK SCOPE AT EXISTING UNIT VENTILATORS IS TO REPLACE THE EXISTING 3-WAY HOT WATER HEATING AND 3-WAY CHILLED WATER CONTROL VALVES AND ACTUATORS. EXISTING UNIT VENTILATOR CONTROLLER AND PROGRAMMING SEQUENCE TO REMAIN (COMPONENTS/POINTS INDICATED IN DETAIL MAY NOT REPRESENT ACTUAL EXISTING CONTROL).
3. TC CONTRACTOR SHALL FIELD VERIFY EXISTING CONTROL VALVE PIPING CONFIGURATION AND SELECT CONTROL VALVES BASED ON EXISTING Cv VALUES OR BASED ON FLOW READINGS TAKEN BY TAB CONTRACTOR PRIOR TO PROJECT DEMOLITION REQUIREMENTS.
4. CONTROL VALVE MANUFACTURER/MODEL SHALL BE SCHNEIDER ELECTRIC (FORMERLY ERIE) / VM SERIES POPTOP ZONE VALVES WITH AP23A000 MODEL ACTUATOR WITH APPROPRIATE CONTROL SIGNAL TO INTERFACE WITH EXISTING DDC CONTROLLER.

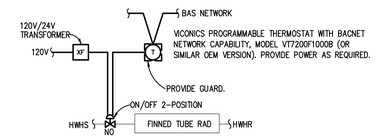

FINNED TUBE RADIATION CONTROL

GREENHOUSE

NOTES:

1. REFER TO FLOOR PLANS FOR QUANTITY AND LOCATION OF UNITS.
2. THIS IS FOR STANDALONE THERMOSTAT AND FINNED TUBE RADIATION VALVE NOT ASSOCIATED WITH UNIT VENTILATOR CONTROLS.
3. CONTROL VALVE MANUFACTURER/MODEL SHALL BE SCHNEIDER ELECTRIC (FORMERLY ERIE) / VM SERIES POPTOP ZONE VALVES WITH AP23A000 MODEL ACTUATOR WITH APPROPRIATE CONTROL SIGNAL TO INTERFACE WITH THERMOSTAT.

SEQUENCE OF OPERATION:

1. ALL SETPOINTS SHALL BE ADJUSTABLE THROUGH THERMOSTAT.
2. THERMOSTAT SHALL OPEN/CLOSE HEATING VALVE AS REQUIRED TO MAINTAIN SPACE TEMP SETPOINT OF 68°F DURING BLDG OCCUPANCY AND 55°F DURING BLDG UNOCCUPANCY.
3. THERMOSTAT SHALL PROVIDE A 2°F DEADBAND AROUND SETPOINTS FOR CONTROL.

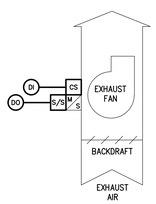

RESTROOM EF (TYP) CONTROL

SEQUENCE OF OPERATION:

1. EXHAUST FAN SHALL BE STARTED AND STOPPED BY DDC BASED ON ASSOCIATED BAS TIME OF DAY BUILDING SCHEDULE.
2. DDC SHALL MONITOR EF RUN STATUS THRU CURRENT SWITCH. ABNORMAL STATUS CONDITION SHALL ACTIVATE ALARM. DDC SHALL TOTALIZE EF RUN TIME HOURS OF OPERATION FOR BAS DISPLAY.

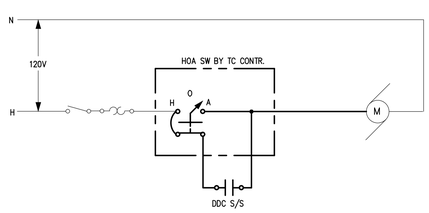

EF TYP. M/S WIRING

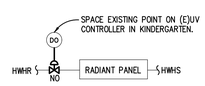

KINDERGARTEN A174 RCP CONTROL

SEQUENCE OF OPERATION:

1. (E)UV CONTROLLER SHALL BE REPROGRAMMED TO USE NEW RADIANT CEILING PANEL CONTROL VALVE FOR 1ST STAGE OF HEAT IN OCCUPIED AND UNOCCUPIED MODE.
2. (E)UV CONTROLLER SHALL USE EXISTING UV ROOM TEMP SENSOR FOR CONTROL.

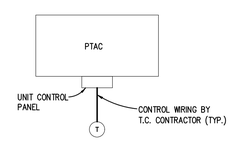

PTAC CONTROL

TYPICAL.

NOTES:

1. REFER TO FLOOR PLAN FOR LOCATIONS OF UNITS.

PTAC SEQUENCE OF OPERATION (TYPICAL):

1. PTAC MANUFACTURER'S THERMOSTAT SHALL PROVIDE OCCUPIED/UNOCCUPIED HEATING/COOLING CONTROL AND SETPOINTS BY MANUAL CONTROL AT THE UNIT.
2. SPACE TEMPERATURE SETPOINTS SHALL BE AS FOLLOWS:

   HEATING UNOCCUPIED SETPOINT = 62°F
   HEATING OCCUPIED SETPOINT = 72°F
   COOLING OCCUPIED SETPOINT = 75°F
   COOLING UNOCCUPIED SETPOINT = 82°F (OR HIGHER TO KEEP UNIT OFF)

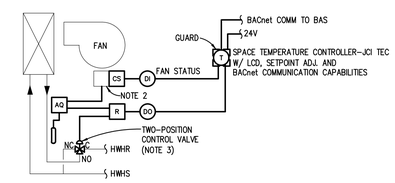

HWH CUH CONTROL

TYPICAL

NOTES:

1. REFER TO FLOOR PLANS FOR QUANTITY AND LOCATION OF UNITS.
2. AQUASTAT SHALL BE WIRED IN SERIES WITH FAN CONTROL WIRING CIRCUIT.
3. CONTROL VALVE MANUFACTURER/MODEL SHALL BE SCHNEIDER ELECTRIC (FORMERLY ERIE) / VM SERIES POPTOP ZONE VALVES WITH AP23A000 MODEL ACTUATOR WITH APPROPRIATE CONTROL SIGNAL TO INTERFACE WITH NEW CONTROLLER.

SEQUENCE OF OPERATION:

1. JCI TEC CONTROLLER SHALL ENABLE/DISABLE FAN CIRCUIT AND OPEN/CLOSE HEATING VALVE AS REQUIRED TO MAINTAIN SPACE TEMP SETPOINT OF 68°F DURING BLDG OCCUPANCY AND 55°F DURING BLDG UNOCCUPANCY. FAN SHALL ACTIVATE UPON PROOF OF HWHR FLOW BY AQUASTAT. AQUASTAT SHALL PROVIDE 4°F DEADBAND MINIMUM.
2. TEC SHALL PROVIDE 2°F DEADBAND AT SETPOINTS.
3. TEC SHALL MONITOR FAN OPERATION. ABNORMAL OPERATING STATUS SHALL ACTIVATE AN ALARM.

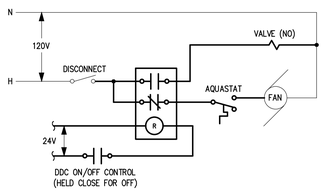

HWH CUH WIRING

TYPICAL

WAKELY ASSOCIATES, INC.
ARCHITECTS & ENGINEERS

30500 VAN DYKE AVE.
SUITE M-7
WARREN, MICHIGAN, 48093

TEL. 586-573-4100
FAX. 586-573-0822
E-MAIL: WA@WAKELYAIA.COM

Peter Basso Associates Inc
CONSULTING ENGINEERS
5145 Livernois, Suite 100
Troy, Michigan 48098-3276
Tel: 248-879-5666
Fax: 248-879-0007
www.PeterBassoAssociates.com
PBA Project No.: 2015-0144

FARMINGTON PUBLIC SCHOOLS - 2015 BOND
2018 PROJECTS
KENBROOK & BEECHVIEW ELEMENTARY SCHOOLS

KENBROOK ELEMENTARY SCHOOL

TEMPERATURE CONTROLS

PRELIMINARY ☐
DESIGN DEVELOPMENT ☐
CONSTRUCTION ■
FINAL RECORD ☐

DRAWN BY: JRM
CHECKED BY: SVM

REVISIONS:

DATE: 12-15-17

SHEET NO.:

M8.4KB

JOB NO.: 171712A

g:\2015\2015-0144-00\Cad\kenbrook es\2015-0144-M8-CP.dwg, M8.4KB, 12/12/2017 2:27:31 PM, Suha A. Matti, _Default.pc3 ,0.09699, Peter Basso Associates Inc.

ELECTRICAL SYMBOL LIST

(NOTE: SOME SYMBOLS AND ABBREVIATIONS SHOWN MAY NOT APPLY TO THIS PROJECT)

SYMBOL	DESCRIPTION
FX	FIXTURE TYPE
	LIGHTING FIXTURE
	DIRECT/INDIRECT LIGHTING FIXTURE
	EMERGENCY FIXTURE
	NIGHT LIGHTING FIXTURE
FX-NL	LIGHTING FIXTURE
	EMERGENCY FIXTURE
	WALL MOUNTED LIGHTING FIXTURE
	LIGHTING FIXTURE
	EMERGENCY FIXTURE
	DIRECTIONAL LIGHTING FIXTURE
	PENDANT LIGHTING FIXTURE
	WALL SCONCE
	LIGHTING TRACK
	TRACK LIGHTING FIXTURE
	POLE MOUNTED LIGHTING FIXTURE
	POLE MOUNTED LIGHTING FIXTURE – POST TOP
	BOLLARD LIGHTING FIXTURE
	EMERGENCY LIGHTING UNIT
	EXIT LIGHTING FIXTURE WITH DIRECTIONAL ARROWS (SHADED AREA INDICATES FACE)
	EXIT LIGHTING FIXTURE WITH DIRECTIONAL ARROWS (SHADED AREA INDICATES FACE)
	EXIT LIGHTING FIXTURE – WALL MOUNTED
ELTD	EMERGENCY LOAD TRANSFER DEVICE
S	SINGLE POLE TOGGLE SWITCH
S2	TWO POLE TOGGLE SWITCH
S3	3 WAY TOGGLE SWITCH
S4	4 WAY TOGGLE SWITCH
K	KEY OPERATED SWITCH
K3	3 WAY KEY OPERATED SWITCH
K4	4 WAY KEY OPERATED SWITCH
D	DIMMER SWITCH
D3	3 WAY DIMMER SWITCH
DO	DIMMER OCCUPANCY SENSOR SWITCH
DL	LOW VOLTAGE DIMMER SWITCH
SP	PILOT SWITCH

SYMBOL	DESCRIPTION
TWC	TWO-WAY COMMUNICATION SYSTEM CALL STATION
TWCD	TWO-WAY COMMUNICATION SYSTEM AUTO DIALER
TWCA	TWO-WAY COMMUNICATION SYSTEM ANNUNCIATOR & COMMUNICATION PANEL
TWCP	TWO-WAY COMMUNICATION SYSTEM POWER SUPPLY WITH BATTERY BACK-UP
TWCDP	TWO-WAY COMMUNICATION SYSTEM AUTO DIALER POWER SUPPLY WITH BATTERY BACK-UP
RGP	REMOTE GENERATOR ANNUCIATOR PANEL
ATS	AUTOMATIC TRANSFER SWITCH
UPS	UN-INTERRUPTABLE POWER SUPPLY
CSX	LOW VOLTAGE CONTROL STATION "X" INDICATES TYPE
	SINGLE RECEPTACLE
	DUPLEX RECEPTACLE
	QUAD RECEPTACLE
	ABOVE COUNTER DUPLEX RECEPTACLE (SIMILAR FOR TAMPER RESISTANT, QUADS, EMERGENCY AND GFI RECEPTACLES)
	DUPLEX RECEPTACLE-GROUND FAULT CIRCUIT INTERRUPTER
	DUPLEX EMERGENCY RECEPTACLE
	TAMPER RESISTANT RECEPTACLE
	QUAD TAMPER RESISTANT RECEPTACLE
	ABOVE COUNTER DUPLEX TAMPER RESISTANT RECEPTACLE
	DUPLEX UPS RECEPTACLE
	USB RECEPTACLE
	4 PORT USB CHARGING STATION
	CEILING MOUNTED DUPLEX RECEPTACLE
	POWER POLE
	SPECIAL RECEPTACLE – REFER TO ELECTRICAL STANDARD SCHEDULES
	MULTI-OUTLET RACEWAY
"X"	MULTI-SERVICE DROP SEE ELECTRICAL DETAILS AND DIAGRAMS SHEET "X" INDICATES TYPE
PTX	POKE THRU SERVICE FITTING "X" INDICATES TYPE
FBX	FLOOR BOX SERVICE FITTING "X" INDICATES TYPE
AFX	ACCESS FLOOR SERVICE FITTING "X" INDICATES TYPE
RX	CORD REEL "X" INDICATES TYPE
S S	DUAL SWITCHING FOR INNER/OUTER LAMPS OF FLUORESCENT LIGHT FIXTURES
S3 S3	3-WAY DUAL SWITCHING FOR INNER/OUTER LAMPS OF FLUORESCENT LIGHT FIXTURES
S4 S4	4-WAY DUAL SWITCHING FOR INNER/OUTER LAMPS OF FLUORESCENT LIGHT FIXTURES
ST	DIGITAL TIME SWITCH
SI	ILLUMINATED TOGGLE SWITCH FOR CONTROL OF LIGHTING ON CRITICAL POWER-ILLUMINATED WHEN SWITCH IS IN "OFF" POSITION
SL	LOW VOLTAGE SWITCH
SO	OCCUPANCY SENSOR (REFER TO ELECTRICAL STANDARD SCHEDULES)
SO2	OCCUPANCY SENSOR
OS X	OCCUPANCY SENSOR "X" INDICATES TYPE

SYMBOL	DESCRIPTION
CP	CONTROL PANEL
	MOTOR
VFC	VARIABLE FREQUENCY CONTROLLER.
	MANUAL CONTROLLER
	MAGNETIC CONTROLLER
	COMBINATION MAGNETIC CONTROLLER
	NON-FUSIBLE DISCONNECT SWITCH
	FUSIBLE DISCONNECT SWITCH
CB	ENCLOSED CIRCUIT BREAKER
	PUSH BUTTON STATION
J	JUNCTION BOX
	HARD WIRE POWER CONNECTION
DP	AUTOMATIC DOOR CONTROLLER
PP	AUTOMATIC DOOR PUSH PAD OPERATOR
	GROUND ROD
	GROUND CONNECTION
X	CONDUIT SLEEVE WITH BUSHINGS LENGTH AS REQUIRED "X" INDICATES CONDUIT SIZE
	CONDUIT UP
	CONDUIT DOWN
	EMPTY BOX FOR FUTURE TELECOMMUNICATION OUTLET (REFER TO ELECTRICAL STANDARD SCHEDULES)
	ABOVE COUNTER EMPTY BOX FOR FUTURE TELECOMMUNICATION OUTLET (REFER TO ELECTRICAL STANDARD SCHEDULES)
	EMPTY BOX FOR FUTURE CEILING MOUNTED TELECOMMUNICATION OUTLET (REFER TO ELECTRICAL STANDARD SCHEDULES)
X	TELECOMMUNICATION OUTLET "X" INDICATES TYPE (REFER TO ELECTRICAL STANDARD SCHEDULES)
X	ABOVE COUNTER TELECOMMUNICATION OUTLET "X" INDICATES TYPE (REFER TO ELECTRICAL STANDARD SCHEDULES)
X	TELECOMMUNICATION CEILING MOUNTED OUTLET "X" INDICATES TYPE (REFER TO ELECTRICAL STANDARD SCHEDULES)
	TELECOMMUNICATION BACKBOARD
TGB	TELECOMMUNICATION GROUNDING BUS BAR
TMGB	TELECOMMUNICATION MAIN GROUNDING BUS BAR
IC	INTERCOM OUTLET
S	SPEAKER
S	SPEAKER – WALL MOUNTED
MIC	MICROPHONE
VC	VOLUME CONTROL/STATION SELECTOR
B	SIGNALING BELL
	SINGLE FACE CLOCK – CEILING MOUNTED
	SINGLE FACE CLOCK – WALL MOUNTED
	DOUBLE FACE CLOCK – CEILING MOUNTED
	DOUBLE FACE COMBINATION CLOCK/SPEAKER CEILING MOUNTED
	DOUBLE FACE CLOCK – WALL MOUNTED
	DOUBLE FACE COMBINATION CLOCK/SPEAKER WALL MOUNTED
TC	TIME CLOCK
C	CONTACTOR
P	PHOTOCELL
TT	TWIST TIMER

SYMBOL	DESCRIPTION
	SECURITY CAMERA
MD	MOTION DETECTOR
K	SECURITY KEY SWITCH
DC	DOOR CONTACT
KP	KEY PAD
CR	ACCESS CONTROL STATION
DB	DURESS PUSH BUTTON STATION
DE	DELAYED EGRESS
REX	REQUEST TO EXIT STATION
	CIRCUIT BREAKER
	DRAWOUT CIRCUIT BREAKER MANUALLY/ OPERATED
	DRAWOUT CIRCUIT BREAKER ELECTRICALLY/ OPERATED
	SWTCH
	AUTOMATIC OR MANUAL TRANSFER SWITCH
	FUSE
	TRANSFORMER
	CURRENT TRANSFORMER
	POTENTIAL TRANSFORMER
	LIGHTNING ARRESTOR
X	PANELBOARD "X" INDICATES PANELBOARD NAME
	GROUND
	STRESS CONE TERMINATION
K	SECURITY KEY INTERLOCK
G	ENGINE GENERATOR
M	UTILITY METER
EMU	ELECTRONIC METERING UNIT
A	AMMETER
V	VOLTMETER
AS	AMMETER SWITCH
VS	VOLTMETER SWITCH
SPD	SURGE PROTECTIVE DEVICE
CR	CONTROL RELAY
TDR	TIME DELAY RELAY
	THERMAL OVERLOAD RELAY
	NORMALLY OPEN CONTACTS
	NORMALLY CLOSED CONTACTS
	N.O. PUSH BUTTON SINGLE CIRCUIT
	N.C. PUSH BUTTON SINGLE CIRCUIT
C X-X	CABLE VAULT "X-X" INDICATES TYPE
	BRANCH CIRCUIT PANELBOARD
	LOAD CENTER
	MOTOR CONTROL CENTER
T	TRANSFORMER
	DISTRIBUTION PANEL
GB	GROUND BUS
PB	PLUG IN BUSWAY
FB	FEEDER BUSWAY

SYMBOL	DESCRIPTION
F	MANUAL FIRE ALARM BOX
SD	SMOKE DETECTOR
DD	DUCT SMOKE DETECTOR
CO	CARBON MONOXIDE DETECTOR
RT	REMOTE TEST STATION (FOR DUCT DETECTOR)
TD	THERMAL DETECTOR
BD	PROJECTED BEAM DETECTOR
F	FIRE ALARM BELL
F	FIRE ALARM AUDIBLE NOTIFICATION APPLIANCE
XX	FIRE ALARM VISUAL NOTIFICATION APPLIANCE "XX" INDICATES CANDELA RATING IF NO RATING SHOWN, APPLIANCE IS 15cd
XX	FIRE ALARM COMBINATION VISUAL/ AUDIBLE "XX" INDICATES CANDELA RATING IF NO RATING SHOWN, APPLIANCE IS 15cd
F XX	FIRE ALARM COMBINATION VISUAL/ AUDIBLE NOTIFICATION APPLIANCE- CEILING MOUNTED "XX" INDICATES CANDELA RATING IF NO RATING SHOWN, APPLIANCE IS 15cd
XX	FIRE ALARM VISUAL NOTIFICATION APPLIANCE CEILING MOUNTED "XX" INDICATES CANDELA RATING IF NO RATING SHOWN, APPLIANCE IS 15cd
F	FIRE ALARM AUDIBLE NOTIFICATION APPLIANCE – CEILING MOUNTED
F	FIREFIGHTERS PHONE JACK
FACP	FIRE ALARM CONTROL PANEL
FAA	FIRE ALARM ANNUNCIATOR PANEL
NAC	NOTIFICATION APPLIANCE CIRCUIT EXTENDER PANEL
IM	ADDRESSABLE MONITORING MODULE
CM	ADDRESSABLE CONTROL MODULE
TS	TAMPER SWITCH
FS	FLOW SWITCH
DR	MAGNETIC DOOR RELEASE

ELECTRICAL DRAWING INDEX

SHEET NO.	SHEET TITLE
E0.1KB	ELECTRICAL STANDARDS AND DRAWING INDEX
E0.2KB	ELECTRICAL STANDARD SCHEDULES
E0.3KB	ELECTRICAL SITE PLAN
ED1.1KB	ELECTRICAL DEMOLITION PLAN – AREA 'A'
ED1.2KB	ELECTRICAL DEMOLITION PLAN – AREA 'B' AND 'C'
E2.1KB	LIGHTING PLAN – AREA 'A'
E2.2KB	LIGHTING PLAN – AREA 'B' AND 'C'
E3.1KB	POWER PLAN – AREA 'A'
E3.2KB	POWER PLAN – AREA 'B' AND 'C'
E5.1KB	ONE LINE DIAGRAMS
E5.2KB	PANEL SCHEDULES
E7.1KB	ELECTRICAL DETAILS AND DIAGRAMS
E7.2KB	ELECTRICAL DETAILS AND DIAGRAMS

ELECTRICAL ABBREVIATION LIST

ABBREVIATION	DESCRIPTION
A	AMPERES
AF	AMPERES FRAME (BREAKER RATING)
A.F.F.	ABOVE FINISH FLOOR
AIC	AMPS INTERRUPTING CAPACITY
AL	AUDIENCE LEFT
AR	AUDIENCE RIGHT
AT	AMPERES TRIP (BREAKER SETTING)
ATS	AUTOMATIC TRANSFER SWITCH
AUX	AUXILIARY
BKR	BREAKER
BPS	BOLTED PRESSURE SWITCH
C	CONDUIT
CB	CIRCUIT BREAKER
CFCI	CONTRACTOR FURNISHED, CONTRACTOR INSTALLED
CKT	CIRCUIT
CT	CURRENT TRANSFORMER
DEMO	DEMOLITION
DIM	DIMENSION
DISC	DISCONNECT
DP	DISTRIBUTION PANEL
DS	DOWNSTAGE
DWG	DRAWING
EBU	EMERGENCY BATTERY UNIT
EC	ELECTRICAL CONTRACTOR
ELEC	ELECTRICAL
EM/ EMERG	EMERGENCY
EMT	ELECTRICAL METALLIC TUBING
EO	ELECTRICALLY OPERATED
EPO	EMERGENCY POWER OFF
EWC	ELECTRIC WATER COOLER
EXIST	EXISTING
FA	FIRE ALARM
FLA	FULL LOAD AMPS
FLR	FLOOR
FOH	FRONT OF HOUSE
FSEC	FOOD SERVICE EQUIPMENT CONTRACTOR
FU	FUSE
G/GRD/EG	GROUND
GFCI	GROUND FAULT CIRCUIT INTERRUPTER
GFP	GROUND FAULT PROTECTION
HOA	HAND-OFF-AUTO
HP	HORSEPOWER
HV	HIGH VOLTAGE
HZ	HERTZ
IG	ISOLATED GROUND
JB	JUNCTION BOX
KV	KILOVOLT
KVA	KILOVOLT – AMPERES
KW	KILOWATT
KWH	KILOWATT – HOURS
LA	LIGHTNING ARRESTOR
LP	LIGHTING PANEL
LDP	LIGHTING DISTRIBUTION PANEL
MAX	MAXIMUM
MCB	MAIN CIRCUIT BREAKER
MCC	MOTOR CONTROL CENTER
MDP	MAIN DISTRIBUTION PANEL
MECH	MECHANICAL
MIN	MINIMUM
MISC.	MISCELLANEOUS
MLO	MAIN LUGS ONLY
MTD	MOUNTED
MTG	MOUNTING
MTR	MOTOR
N	NEUTRAL
NC	NORMALLY CLOSED
NEC	NATIONAL ELECTRICAL CODE
NF	NON-FUSIBLE
NIC	NOT IN CONTRACT
NL	NIGHT LIGHT
NO	NORMALLY OPEN
NTS	NOT TO SCALE
OC	ON CENTER
OFCI	OWNER FURNISHED, CONTRACTOR INSTALLED
OFOI	OWNER FURNISHED, OWNER INSTALLED
P	POLE
PB	PUSHBUTTON STATION
PH	PHASE
PT	POTENTIAL TRANSFORMER
PDP	POWER DISTRIBUTION PANEL
RECEPT.	RECEPTACLE
RDP	RECEPTACLE DISTRIBUTION PANEL
RP	RECEPTACLE PANEL
RSC	RIGID STEEL CONDUIT
SCHED	SCHEDULE
SW	SWITCH
SWBD	SWITCHBOARD
SWGR	SWITCHGEAR
TB	TERMINAL BOX
TELECOM	TELECOMMUNICATIONS
TR	TAMPER RESISTANT
TTB	TELEPHONE TERMINAL BACKBOARD
TYP	TYPICAL
U.O.N.	UNLESS OTHERWISE NOTED
US	UPSTAGE
V	VOLTS
W	WIRE
WP	WEATHERPROOF
XFMR	TRANSFORMER
XP	EXPLOSION PROOF
(E)	EXISTING
(R)	RELOCATED

STANDARD MOUNTING HEIGHTS

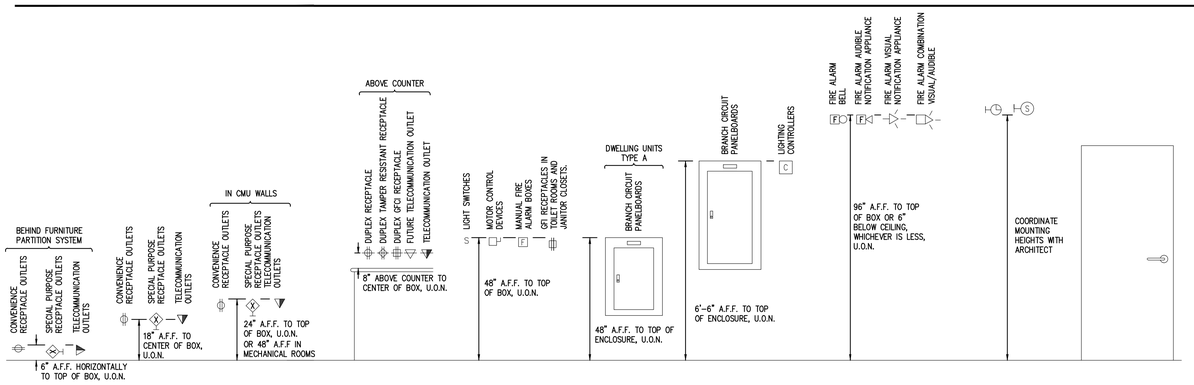

STANDARD METHODS OF NOTATION

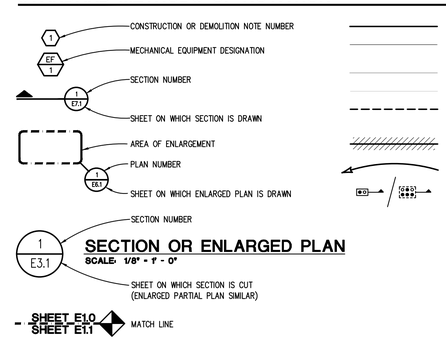

SECTION OR ENLARGED PLAN

SCALE: 1/8" = 1' - 0"

HEAVY LINE WEIGHT INDICATES NEW WORK

LIGHT LINE WEIGHT INDICATES EXISTING EQUIPMENT OR REFERENCED INFORMATION

GRAY LINE INDICATES BACKGROUND INFORMATION

THIN GRAY LINE INDICATES CEILING GRID

DASHED LINES INDICATE CONDUIT ROUTED IN OR BELOW SLAB OR GRADE

HATCH MARKS INDICATE EQUIPMENT TO BE DISCONNECTED AND REMOVED.

CIRCUIT HOMERUN

DUCT BANK – CONCRETE ENCASED / DIRECT BURIED

• IN USE ∘ SPARE

WA

WAKELY ASSOCIATES, INC.
ARCHITECTS & ENGINEERS

30500 VAN DYKE AVE.
SUITE M-7
WARREN, MICHIGAN, 48093

TEL. 586-573-4100
FAX. 586-573-0822
E-MAIL: WA@WAKELYAIA.COM

Peter Basso Associates Inc
CONSULTING ENGINEERS
5145 Livernois, Suite 100
Troy, Michigan 48098-3276
Tel: 248-879-5668
Fax: 248-879-0007
www.PeterBassoAssociates.com
PBA Project No. 2015-0144

FARMINGTON PUBLIC SCHOOLS - 2015 BOND
2018 PROJECTS
KENBROOK & BEECHVIEW ELEMENTARY SCHOOLS

KENBROOK ELEMENTARY SCHOOL

ELECTRICAL STANDARDS AND DRAWING INDEX

PRELIMINARY ☐
DESIGN DEVELOPMENT ☐
CONSTRUCTION ■
FINAL RECORD ☐

DRAWN BY: JRD
CHECKED BY: GJZ

REVISIONS:

DATE: 12-15-17

SHEET NO.: E0.1KB

JOB NO.: 171712A

g:\2015\2015-0144-00\Cad\kenbrook es\2015-0144-E0-IND.dwg, E0.1, 12/12/2017 2:24:09 PM, Suha A. Matti, _Default.pc3 ,0.09899, Peter Basso Associates Inc.

KENBROOK ES LIGHTING FIXTURE SCHEDULE

TYPE	DESCRIPTION	MANUFACTURERS	LAMPS
L1 GYM	LED ROUND HIGH BAY LIGHT FIXTURE: UV STABILIZED POLYCARBONATE REFLECTOR. DIE CAST ALUMINUM HEAT SINK, MULTI VOLT DRIVER AC INPUT, CLASS P SOLID STATE RATED FOR A MINIMUM OF 50,000 HOURS OF OPERATION, MINIMUM 11 GAUGE WIRE GUARD, 5 YEAR WARRANTY. FIELD VERIFY FIXTURE VOLTAGE PRIOR TO ORDERING LIGHT FIXTURES	1. EVERLAST LEGEND SERIES 2. MHT LTG MHTL-HB SERIES 3. HOLOPHANE PHG SERIES 4. SPECGRADE HXBA SERIES 5. DAYBRITE RBX SERIES	LED 4000K WHITE 17,000 LUMENS 80 CRI MINIMUM
L2 CLASSROOMS	LED 2X4 RECESSED LAY IN LIGHT FIXTURE: 3-1/4" DEEP HOUSING. DIE CAST ALUMINUM HEAT SINK MULTI VOLT DRIVER AC INPUT, CLASS P SOLID STATE, RATED FOR A MINIMUM OF 50,000 HOURS OF OPERATION. 5 YEAR FULL COVER WARRANTY.	1. METALUX QRLED SERIES 2. LITHONIA 2GTL SERIES 3. VISIONEERING LRTA SERIES 4. DAY-BRITE 2GT SERIES 5. WILLIAMS 50 SERIES	LED 4000K WHITE 5400 LUMENS 80 CRI MINIMUM
L3 CORRIDORS	LED 2X4 RECESSED LAY IN LIGHT FIXTURE: 3-1/4" DEEP HOUSING. DIE CAST ALUMINUM HEAT SINK MULTI VOLT DRIVER AC INPUT, CLASS P SOLID STATE, RATED FOR A MINIMUM OF 50,000 HOURS OF OPERATION. 5 YEAR FULL COVER WARRANTY.	1. METALUX QRLED SERIES 2. LITHONIA 2GTL SERIES 3. VISIONEERING LRTA SERIES 4. DAY-BRITE 2GT SERIES 5. WILLIAMS 50 SERIES	LED 4000K WHITE 4000 LUMENS 80 CRI MINIMUM
L4 RESTROOM	LED 1X4 RECESSED LIGHT FIXTURE: DIE FORMED WELDED STEEL HOUSING. ELECTROSTATICALLY APPLIED WHITE POWDER COAT FINISH. 18 GAUGE STEEL DOOR FRAME, ONE PIECE WITH DIE FORMED EDGES, AIRCRAFT CABLE TETHER FROM DOOR FRAME TO FIXTURE. STAINLESS STEEL TAMPER RESISTANT T20 TORX SCREWS. PROVIDED (2) SCREW DRIVERS FOR OWNER. LENS SHALL BE PRISMATIC POLYCARBONATE. DIE CAST ALUMINUM HEAT SINK, MULTI VOLT DRIVER AC INPUT, CLASS P SOLID STATE RATED FOR A MINIMUM OF 50,000 HOURS OF OPERATION. 5 YEAR WARRANTY. PROVIDE WITH MUD FLANGE FOR GYP CEILING.	1. KENALL HASEDI SERIES 2. FAIL-SAFE FSR SERIES 3. NEWSTAR 37M14 SERIES 4. WILLIAMS 50 SERIES 5. DAYBRITE 1LT SERIES	LED 4000K WHITE 4000 LUMENS 80 CRI MINIMUM
L5 OFFICE	LED 2X4 RECESSED CENTER BASKET LIGHT FIXTURE: DIE CAST ALUMINUM HEAT SINK MULTI VOLT DRIVER AC INPUT, CLASS P SOLID STATE, RATED FOR A MINIMUM OF 50,000 HOURS OF OPERATION. 5 YEAR FULL COVER WARRANTY.	1. LITHONIA 2VTL SERIES 2. METALUX 24CZ SERIES 3. VISIONEERING LRTM SERIES 4. DAY-BRITE 2EV SERIES 5. WILLIAMS CDA SERIES	LED 4000K WHITE 3500 LUMENS 80 CRI MINIMUM
L6 MEDIA CENTER	LED 2X4 RECESSED CENTER BASKET LIGHT FIXTURE: DIE CAST ALUMINUM HEAT SINK MULTI VOLT DRIVER AC INPUT, CLASS P SOLID STATE, RATED FOR A MINIMUM OF 50,000 HOURS OF OPERATION. 5 YEAR FULL COVER WARRANTY.	1. LITHONIA 2VTL SERIES 2. METALUX 24CZ SERIES 3. VISIONEERING LRTM SERIES 4. DAY-BRITE 2EV SERIES 5. WILLIAMS CDA SERIES	LED 4000K WHITE 5000 LUMENS 80 CRI MINIMUM
L7 STORAGE	LED LENSED STRIP LIGHT FIXTURE: DIE FORMED HEAVY GAUGE STEEL HOUSING WITH A DIE CAST ALUMINUM HEAT SINK, MULTI VOLT DRIVER AC INPUT, CLASS P SOLID STATE RATED FOR A MINIMUM OF 50,000 HOURS OF OPERATION. 5 YEAR WARRANTY. CHAIN HUNG AT 9' AFF UNLESS OTHERWISE NOTED. PROVIDE SURFACE MOUNT KIT WHERE INDICATED AS A WALL MOUNTED FIXTURE.	1. METALUX SNLED SERIES 2. VISIONEERING LCOMN SERIES 3. LITHONIA ZL2N 4. DAY-BRITE LF SERIES 5. WILLIAMS 75R SERIES	LED 4000K WHITE 3100 LUMENS 80 CRI MINIMUM
L8 CAFETERIA	LED 2X4 RECESSED LAY IN LIGHT FIXTURE: 3-1/4" DEEP HOUSING. DIE CAST ALUMINUM HEAT SINK MULTI VOLT DRIVER AC INPUT, CLASS P SOLID STATE, RATED FOR A MINIMUM OF 50,000 HOURS OF OPERATION. 5 YEAR FULL COVER WARRANTY.	1. METALUX QRLED SERIES 2. LITHONIA 2GTL SERIES 3. VISIONEERING LRTA SERIES 4. DAY-BRITE 2GT SERIES 5. WILLIAMS 50 SERIES	LED 4000K WHITE 7000 LUMENS 80 CRI MINIMUM
L9 CAFETERIA	LED PENDANT HUNG 6" CYLINDER LIGHT FIXTURE: WHITE HOUSING; SELF-FLANGED, SEMI-SPECULAR DIFFUSER; MULTI VOLT RATED DRIVERE; 65 DEGREE BEAM ANGLE; PROVIDE WITH A MINIMUM 10' AIRCRAFT CABLE MOUNT; 0-10V DIMMING DRIVER, MINIMUM DIMMING LEVEL 10%.	1. GOTHAM INCITO SERIES 2. ALUMILITE YRC 1200 SERIES 3. V2 LIGHTING SERIES 4. ENGINEER APPROVED EQUAL	LED 4000K WHITE 7,000 LUMENS 80 CRI MINIMUM
L10 EXTERIOR WALL	LED ARCHITECTURAL TRAPEZOIDAL WALL PACK LIGHT FIXTURE: FORWARD THROW, WEATHER RESISTANT ALUMINUM HOUSING WITH INTEGRAL WEATHER TIGHT LED DRIVER WITH HIGH PERFORMANCE ALUMINUM HEAT SINKS. U.L. LISTED FOR WET LOCATIONS. FIXTURE SHALL BE COMPLETELY GASKETED, MULTI VOLT DRIVER AC INPUT, CLASS P SOLID STATE, RATED FOR A MINIMUM 50,000 HOURS OF OPERATION. 5 YEAR WARRANTY. BLACK COLOR. FIELD VERIFY FIXTURE VOLTAGE PRIOR TO ORDERING LIGHT FIXTURES	1. LITHONIA WST-LED SERIES 2. MCGRAW-EDISON IST BOI SERIES 3. SPAULDING TRP SERIES 4. GARDCO 121 SERIES 5. LSI SWP SERIES	LED 4000K WHITE 2000 LUMENS 80 CRI MINIMUM
L11 PARKING LOT	LED POLE MOUNTED PARKING LOT LIGHT FIXTURE: POLE TOP CONFIGURATION AS SHOWN ON PLAN. TYPE (4) DISTRIBUTION. FULLY GASKETED ALUMINUM HOUSING WITH INTEGRAL WEATHER TIGHT ELECTRONIC MULTI-VOLT LED DRIVER THAT IS U.L. LISTED FOR WET LOCATIONS. FUSED AT HAND HOLE. PROVIDE NEW MOUNTING ARM(S) AS REQUIRED. PROVIDE WITH INTEGRAL HOUSE SIDE SHIELD. FIXTURE COLOR SHALL BE BLACK WITH A 10 YEAR WARRANTY. FIELD VERIFY FIXTURE VOLTAGE PRIOR TO ORDERING LIGHT FIXTURES.	1. LITHONIA D SERIES 2. CREE OSQ SERIES 3. COOPER GALLEON SERIES 4. GARDCO ECF SERIES 5. LSI MIRADA SERIES	LED 4000K WHITE 80 CRI MINIMUM 20,000 LUMENS MINIMUM
L12 PARKING LOT	LED POLE MOUNTED PARKING LOT LIGHT FIXTURE: POLE TOP CONFIGURATION AS SHOWN ON PLAN. TYPE (4) DISTRIBUTION. FULLY GASKETED ALUMINUM HOUSING WITH INTEGRAL WEATHER TIGHT ELECTRONIC MULTI-VOLT LED DRIVER THAT IS U.L. LISTED FOR WET LOCATIONS. FUSED AT HAND HOLE. PROVIDE NEW MOUNTING ARM(S) AS REQUIRED. PROVIDE WITH INTEGRAL HOUSE SIDE SHIELD. FIXTURE COLOR SHALL BE BLACK WITH A 10 YEAR WARRANTY. FIELD VERIFY FIXTURE VOLTAGE PRIOR TO ORDERING LIGHT FIXTURES.	1. LITHONIA D SERIES 2. CREE OSQ SERIES 3. COOPER GALLEON SERIES 4. GARDCO ECF SERIES 5. LSI MIRADA SERIES	LED 4000K WHITE 80 CRI MINIMUM 12,000 LUMENS MINIMUM
L13 CANOPY	LED SURFACE MOUNTED CANOPY FIXTURE: 12" SQUARE, 3" DEEP SURFACE MOUNTED CANOPY FIXTURE; DIE FORMED ALUMINUM HOUSING; MULTI VOLT RATED DRIVER; UV RESISTANT POLYESTER POWDER COAT FINISH; TYPE V DISTRIBUTION; FULLY GASKETED AND WET LOCATION LISTED.	1. BARRON TRACE-LTE TLED SERIES 2. GARDCO SFC SERIES 3. KENALL MS1F1 SERIES 4. ENGINEER APPROVED EQUAL	LED 4000K WHITE 80 CRI MINIMUM 2,500 LUMENS MINIMUM
L14 OFFICE	LED 6 INCH APERTURE RECESSED DOWN LIGHT FIXTURE: WARM WHITE LED SOURCE WITH MAXIMUM COLOR TEMPERATURE DIFFERENTIATION OF ± 100K. VENTILATED DIE CAST ALUMINUM HEAT SINK, SELF FLANGED REFLECTOR WITH MATTE FINISH. MULTI VOLT DRIVER, AC INPUT. CLASS P, SOLID STATE, RATED FOR MINIMUM 50,000 HOURS OF OPERATION. 5 YEAR WARRANTY.	1. FAIL-SAFE FERM6A SERIES 2. GOTHAM EVO SERIES 3. NEWSTAR DLM6 SERIES 4. CALCULITE C6L SERIES 5. WILLIAMS L6D SERIES	LED 4000K WHITE 1400 LUMENS 80 CRI MINIMUM
X	EXIT LIGHT SHALL BE MOUNTED AS REQUIRED, WITH WHITE DIE CAST ALUMINUM HOUSING, HIGH OUTPUT LED DIFFUSE LIGHT PANEL, SINGLE STENCIL WHITE FACE WITH RED LETTERS AND SUITABLE FOR MULTI VOLT (FUSED) OPERATION. PROVIDE DIRECTIONAL ARROW AS INDICATED ON PLAN.	1. LITHONIA SIGNATURE SERIES 2. SURELITE CX SERIES 3. DUAL LITE SE SERIES 4. CHLORIDE CE SERIES 5. WILLIAMS CA SERIES	LED LIGHT PANEL

FOR FIXTURES DESIGNATED WITH AN "E" SUFFIX, PROVIDE EMERGENCY BATTERY BACKUP BALLAST. REFER TO SPECIFICATIONS FOR REQUIREMENTS.

FLOOR SERVICE FITTING ASSEMBLY SCHEDULE

TYPE	DESCRIPTION	MANUFACTURER (SEE NOTE #2)	DEVICE CONFIGURATION	FLANGE/COVER MATERIAL & COLOR	SERVICE PLATE TYPE	MINIMUM DEPTH	MAXIMUM CONDUIT
FB1	MULTI FUNCTION FOUR GANG, MULTI SERVICE, STAMPED STEEL FOR SLAB ON GRADE APPLICATIONS, RECESSED FLOOR BOX. 2 DUPLEX RECEPTACLES AND 2 TELECOM OUTLETS, CARPET/TILE INSERT COVER.	WIREMOLD RFB4E-OG	2D / 2T	BK	F	3 1/2"	2"

NOTES:
1. PROVIDE 1 1/4"C. FROM EACH TELECOM FLOOR BOX (GANG) TO ACCESSIBLE LOCATION IN CEILING.
2. OTHER ACCEPTABLE MANUFACTURERS ARE STEEL CITY, OR HUBBELL-RACO.
3. ALL PRODUCTS IN THIS SCHEDULE SHALL MEET AND EXCEED THE UL514A or UL514C SCRUB WATER EXCLUSION REQUIREMENT.
4. COORDINATE ALL TELECOM AND A/V OUTLETS WITH COMMUNICATIONS AND A/V CONTRACTORS.

ABBREVIATIONS:

PF = PARTITION FEED
D = DUPLEX RECEPTACLE
T = 2 TELECOM OPENINGS

BS = BRASS
AL = ALUMINUM
BK = BLACK
GY = GRAY (CONCRETE)
BZ = BRONZE
NK = NICKEL

FR = FLIP LID/RECTANGULAR
SL = SLIDES
F = FLIP COVER

NOTE: SOME SYMBOLS AND ABBREVIATIONS SHOWN MAY NOT APPLY TO THIS PROJECT.

MOTOR CIRCUIT SIZING SCHEDULE (208V, 3 PHASE)

MOTOR HP	SWITCH/ FUSE	CIRCUIT BREAKER	STARTER SIZE/TYPE	MOTOR DISCONNECT (NOTE 3)
1/2	30/6A	15A	1	30A
3/4	30/6A	15A	1	30A
1	30/10A	15A	1	30A
1 1/2	30/10A	15A	1	30A
2	30/10A	15A	1	30A
3	30/20A	20A	1	30A
5	30/25A	35A	1	30A
7 1/2	60/40A	50A	1	60A
10	60/50A	60A	2	60A
15	60/60A	90A	3	60A
20	100/90A	100A	3	100A
25	100/100A	110A	3	100A
30	200/125A	125A	4	200A
40	200/175A	175A	4	200A
50	200/200A	200A	5	200A
60	400/250A	250A	5	400A
75	400/300A	300A	5	400A
100	400/400A	400A	6	400A
125	600/500A	600A	6	600A
150	600/600A	600A	6	600A

NOTES:

1. BASED ON MOTOR FULL LOAD AMPERES AS PROVIDED BY THE N.E.C.
2. BASED ON MOTOR RUNNING OVERLOAD PROTECTIONS PROVIDED BY THERMAL OVERLOAD RELAYS.
3. WHERE THE STARTER IS LOCATED REMOTE FROM THE MOTOR, PROVIDE DISCONNECT LOCATED AT THE MOTOR, SIZE AS INDICATED.

OCCUPANCY/VACANCY SENSOR LEGEND

TYPE	DESCRIPTION
OS A	360° CEILING MOUNTED DUAL TECHNOLOGY OCCUPANCY/VACANCY SENSOR
OS B	90° CEILING/WALL MOUNTED DUAL TECHNOLOGY OCCUPANCY/VACANCY SENSOR
OS C	360° CEILING MOUNTED PASSIVE INFRARED OCCUPANCY/VACANCY SENSOR
OS D	360° CEILING MOUNTED ULTRASONIC OCCUPANCY/VACANCY SENSOR
OS E	360° CEILING MOUNTED ULTRASONIC OCCUPANCY/VACANCY SENSOR – CORRIDOR OPTIMIZED
So	WALL SWITCH OCCUPANCY/VACANCY SENSOR
So2	WALL SWITCH OCCUPANCY SENSOR/VACANCY – DUAL LEVEL SWITCHING
Do	WALL DIMMER SWITCH OCCUPANCY/VACANCY SENSOR

NOTES:

1. PLACE CEILING MOUNTED SENSORS IN A FULL CEILING TILE, WHERE APPLICABLE. FOR WALL MOUNTED SENSORS, MANUFACTURER SHALL DETERMINE MOUNTING HEIGHT.
2. ALL OCCUPANCY/VACANCY SENSORS ARE SHOWN IN APPROXIMATE LOCATIONS. THE LIGHTING CONTROLS MANUFACTURER SHALL SHOW ALL DEVICES IN EXACT LOCATIONS ON SHOP DRAWINGS. THE LIGHTING CONTROLS MANUFACTURER SHALL PROVIDE/RELOCATE/ADD DEVICES AS REQUIRED TO COMPLY WITH ASHRAE 90.1-2013. ANY ADDITIONAL SENSORS ADDED SHALL BE DONE WITH NO ADDITIONAL EXPENSE TO OWNER.
3. MANUFACTURER SHALL PROVIDE SPECIFIC WIRING DIAGRAM FOR EACH DESIGNATED AREA OF USE OF OCCUPANCY/VACANCY/PHOTOCELL CONTROL. WIRING DIAGRAMS INDICATED ON THE DRAWINGS INDICATE INTENT ONLY. ELECTRICAL CONTRACTOR SHALL FOLLOW SPECIFIC WIRING DIAGRAMS FROM THE MANUFACTURER.
4. COORDINATE AND PROVIDE ALL REQUIRED COMPONENTS FOR A COMPLETE SYSTEM.
5. ADJUST SENSOR SENSITIVITY LEVELS PER OWNER REQUIREMENTS. ADJUST SENSOR TIME DURATION PER ASHRAE 90.1-2013.

DTE LIGHTING INCENTIVES PROGRAM

THE ELECTRICAL CONTRACTOR SHALL INCLUDE IN HIS BID AND BE RESPONSIBLE FOR PROVIDING AND MEETING ALL REQUIREMENTS FOR THE OWNER TO PARTICIPATE IN THE CURRENT DTE ENERGY SAVINGS PROGRAM. THE FOLLOWING ITEMS WILL BE REQUIRED BUT NOT LIMITED TO, FOR THE OWNER TO PARTICIPATE IN THIS PROGRAM:

1. ON BEHALF OF THE OWNER, PROVIDE AND SUBMIT ALL REQUIRED INFORMATION FOR THE RESERVATION APPLICATION AND THE FINAL APPLICATION. REFER TO DTE ENERGY PROGRAM APPLICATION AT www.dteenergy.com/sovenow.
2. CONTRACTOR BUSINESS INFORMATION.
3. LIGHTING INCENTIVES WORKSHEET/CUSTOM INCENTIVE WORKSHEET, AS REQUIRED.
4. TYPE OF FIXTURES REMOVED, WATTAGE AND LAMP SIZE.
5. EASY TO READ ITEMIZED INVOICES WITH PART NUMBERS OF ALL LIGHT FIXTURES, BALLASTS AND LAMPS.
6. MANUFACTURERS CUT SHEETS WITH HIGHLIGHTED FIGURES, BALLAST, LAMPS, TYPE OF FIXTURE, ETC. AS REQUIRED BY DTE.
7. MEASURES ARE COMPLETELY INSTALLED WITHIN 90 DAYS OF PROJECT APPROVAL.

IT IS THE ELECTRICAL CONTRACTORS RESPONSIBILITY TO CONTACT DTE'S ENERGY SAVINGS TEAM OR ASSIGNED REPRESENTATIVE IF A PROJECT IS DELAYED, OR SUBSTANTIALLY CHANGED.

THE ELECTRICAL CONTRACTOR SHALL WORK WITH AND COORDINATE WITH THE OWNER FOR THE RESERVATION AND FINAL APPLICATION PROCESS PRIOR TO SITE WORK BEING CONDUCTED AND POST REVIEW INSPECTION FOR REMOVAL AND INSTALLATION OF ALL EQUIPMENT RELATED TO THE INCENTIVE PROGRAM.

RACEWAY APPLICATION SCHEDULE

RACEWAY		AC/MC CABLE	ALUMINUM RIGID CONDUIT	ELECTRICAL METALLIC TUBING (EMT)	SURFACE RACEWAY	ELECTRICAL NONMETALLIC TUBING (ENT)	FLEXIBLE METAL CONDUIT (FMC)	GENERAL-USE OPTICAL FIBER/COMMUNICATION CABLE	INTERMEDIATE METAL CONDUIT (IMC)	LIQUIDTIGHT FLEXIBLE METAL CONDUIT (LFMC)	LIQUIDTIGHT FLEXIBLE NONMETAL CONDUIT (LFNC)	PLENUM-TYPE OPTICAL FIBER/COMMUNICATIONS CABLE RACEWAY	RISER-TYPE OPTICAL FIBER/COMMUNICATIONS CABLE RACEWAY	RIGID STEEL CONDUIT	RIGID NONMETALLIC CONDUIT (RNC) TYPE EPC-40	RIGID NONMETALLIC CONDUIT (RNC) TYPE EPC-80	HIGH DENSITY POLYTHYLENE (HDPE) SCHEDULE 40	HIGH DENSITY POLYTHYLENE (HDPE) SCHEDULE 80	KEYED NOTES
OUTDOOR	EXPOSED								X				X						
	CONCEALED (ABOVE GROUND)								X				X						
	UNDERGROUND												X		X	X	X	X	
	CONNECTED TO VIBRATING EQUIPMENT								X										EQUIPMENT INCLUDING: TRANSFORMERS, HYDRAULIC PNEUMATIC, ELECTRIC SOLENOID, MOTOR DRIVEN EQUIPMENT
INDOOR	EXPOSED NOT SUBJECT TO PHYSICAL DAMAGE – UNFINISHED SPACES			X															
	EXPOSED NOT SUBJECT TO PHYSICAL DAMAGE – FINISHED SPACES				X														
	EXPOSED SUBJECT TO SEVERE PHYSICAL DAMAGE								X				X						RIGID STEEL CONDUIT UP TO 10'-0"AFF. LOCATIONS INCLUDE: LOADING DOCKS, CORRIDORS USED FOR TRAFFIC OF MECHANIZED CARTS AND PALLET HANDLING UNITS, MECHANICAL ROOMS
	CONCEALED IN CEILINGS, INTERIOR WALL AND PARTITIONS	X		X															NOT TO EXCEED 6'-0" IN CEILING SPACE
	CONNECTED TO VIBRATING EQUIPMENT					X			X										EQUIPMENT INCLUDING: TRANSFORMERS, HYDRAULIC PNEUMATIC, ELECTRIC SOLENOID, MOTOR DRIVEN EQUIPMENT USE LFMC IN DAMP/WET LOCATIONS
	DAMP AND WET LOCATIONS								X				X						
	BELOW SLAB IN GRADE														X	X			PROVIDE RIGID STEEL ELBOWS WHERE CONDUIT PENETRATES SLAB. CONDUIT INSTALLED 6" BELOW BOTTOM OF SLAB
	EMBEDDED IN CONCRETE ABOVE GRADE												X		X	X			
	OPTICAL FIBER OR COMMUNICATIONS CABLE IN SPACES USED FOR ENVIRONMENTAL AIR			X								X							
	CONCEALED GENERAL PURPOSE DISTRIBUTION OF OPTICAL FIBER OR COMMUNICATION CABLE			X				X				X		X					
SPECIAL APPLICATIONS	MRI		X																
	NATATORIUMS/FOUNTAINS			X															USE COMPRESSION FITTINGS. PAINTED WITH CORROSION RESISTANT PAINT BY PAINTING CONTRACTOR.

GENERAL NOTES

1. 'X' INDICATES ACCEPTABLE SELECTION.
2. REFER TO "CONDUCTORS AND CABLES" SPECIFICATION FOR APPLICATION LIMITATIONS OF AC/MC CABLE.

FEEDER AND BRANCH CIRCUIT SIZING SCHEDULE - GENERAL PURPOSE

COPPER CONDUCTORS

	OVERCURRENT DEVICE RATING (AMPERES)	WIRE SIZE (AWG OR KCMIL) PHASE & NEUTRAL	WIRE SIZE (AWG OR KCMIL) GROUND	CONDUIT SIZE SINGLE PHASE 2 WIRE+G (1PH, 1N, 1G)	CONDUIT SIZE SINGLE PHASE 3 WIRE+G (2PH, 1N, 1G)	CONDUIT SIZE THREE PHASE 3 WIRE+G (3PH, 1G)	CONDUIT SIZE THREE PHASE & NEUTRAL 4 WIRE+G (3PH, 1N, 1G)
	15-20	12	12	3/4"	3/4"	3/4"	3/4"
	25-30	10	10	3/4"	3/4"	3/4"	3/4"
	35-40	8	10	3/4"	3/4"	3/4"	3/4"
*	45-50	8 (6)	10	3/4"	3/4"	3/4"	3/4"
*	60	6 (4)	10	3/4" (1")	3/4" (1")	3/4" (1")	1" (1 1/4")
	70	4	8	1"	1 1/4"	1 1/4"	1 1/4"
*	80	4 (3)	8	1"	1 1/4"	1 1/4"	1 1/4"
*	90-100	3 (2)	8	1 1/4"	1 1/4"	1 1/4"	1 1/4"
*	110	2 (1)	6	–	1 1/4"	1 1/4"	1 1/4" (1 1/2")
*	125	1 (1/0)	6	–	1 1/4" (1 1/2")	1 1/4" (1 1/2")	1 1/2"
	150	1/0	6	–	1 1/2"	1 1/2"	1 1/2"
	175	2/0	6	–	2"	2"	2"
	200	3/0	6	–	2"	2"	2 1/2"
	225	4/0	4	–	2"	2"	2 1/2"
	250	250	4	–	2 1/2"	2 1/2"	2 1/2"
	300	350	4	–	2 1/2"	2 1/2"	3"
	350	500	3	–	3"	3"	3"
	400	500	3	–	3"	3"	3"

* = SEE NOTE 4

NOTES:

1. CONTRACTOR TO SIZE FEEDERS AND BRANCH CIRCUITS BASED ON THIS SCHEDULE AND OVER CURRENT DEVICE SIZE, UNLESS NOTED OTHERWISE.
2. CONTRACTOR MAY COMBINE 20A CIRCUITS AS NOTED IN SPECIFICATION.
3. CONDUCTORS ARE BASED ON THHN/THWN UP TO AND INCLUDING #4/0. LARGER THAN #4/0 ARE BASED ON TYPE XHHW.
4. CONDUCTORS ARE BASED ON 90°C, 600V. INSULATED COPPER WIRE APPLIED AT 75°C FOR TERMINATION RATED 60/75°C OR 75°C. FOR TERMINATION RATED AT 60°C, USE CONDUCTORS AND CONDUIT SIZES INDICATED IN PARENTHESES.
5. CONDUIT SIZES ARE VALID FOR EMT OR RGS. CONDUIT SIZES SHALL BE ADJUSTED AS REQUIRED FOR OTHER TYPES OF CONDUIT.
6. ELECTRICAL CONTRACTOR TO COORDINATE WITH MECHANICAL CONTRACTOR AND PROVIDE REQUIRED WIRE SIZES TO ACCOMMODATE MECHANICAL EQUIPMENT LUG SIZES.
7. SIZE OF DISCONNECT SWITCH LOCATED AT EQUIPMENT SHALL BE SIZED BASED UPON OVERCURRENT PROTECTION OF THAT DEVICE.
8. OBTAIN APPROVAL FROM ENGINEER PRIOR TO INSTALLING DIFFERENT SIZE/QUANTITY OF CONDUCTORS TO OBTAIN AN EQUIVALENT AMPACITY.
9. SPLICE FROM ALUMINUM TO COPPER PRIOR TO ENTERING EQUIPMENT LISTED FOR USE WITH COPPER CONDUCTORS ONLY OR USE COPPER CONDUCTORS FOR THE ENTIRE LENGTH OF FEEDER.

BRANCH CIRCUIT VOLTAGE DROP WIRING SCHEDULE FOR SINGLE PHASE CIRCUITS

BRANCH CKT RATING (A)	WIRE SIZE (AWG)	MAXIMUM BRANCH CIRCUIT LENGTH (IN FEET) 120V	208V	240V	277V	480V
20A	12	83	143	165	191	331
	10	128	222	256	295	511
	8	201	348	402	464	804
	6	313	542	625	721	1250
30A	10	85	148	170	197	341
	8	134	232	268	309	536
	6	208	361	417	481	833
	4	313	542	625	721	1250

WA
WAKELY ASSOCIATES, INC.
ARCHITECTS & ENGINEERS
30500 VAN DYKE AVE.
SUITE M-7
WARREN, MICHIGAN, 48093
TEL. 586-573-4100
FAX. 586-573-0822
E-MAIL: WA@WAKELYAIA.COM

Peter Basso Associates Inc
CONSULTING ENGINEERS
5145 Livernois, Suite 100
Troy, Michigan 48098-3276
Tel: 248-879-5668
Fax: 248-879-0007
www.PeterBassoAssoc.com
PBA Project No.: 2015-014

FARMINGTON PUBLIC SCHOOLS - 2015 BOND
2018 PROJECTS
KENBROOK & BEECHVIEW ELEMENTARY SCHOOLS

KENBROOK ELEMENTARY SCHOOL

ELECTRICAL STANDARD SCHEDULES

PRELIMINARY ☐
DESIGN DEVELOPMENT ☐
CONSTRUCTION ■
FINAL RECORD ☐

DRAWN BY: JRD
CHECKED BY: GJZ

REVISIONS:

DATE: 12-15-17

SHEET NO.:

E0.2KB

JOB NO.: 171712A

g:\2015\2015-0144-00\Cad\kenbrook es\2015-0144-E0-IND.dwg, E0.2, 12/12/2017 2:24:10 PM, Suha A. Matti, _Default.pc3 ,0.09699, Peter Basso Associates Inc.

THE FOLLOWING DIMENSION EQUALS ONE INCH WHEN PRINTED TO SCALE. 1"

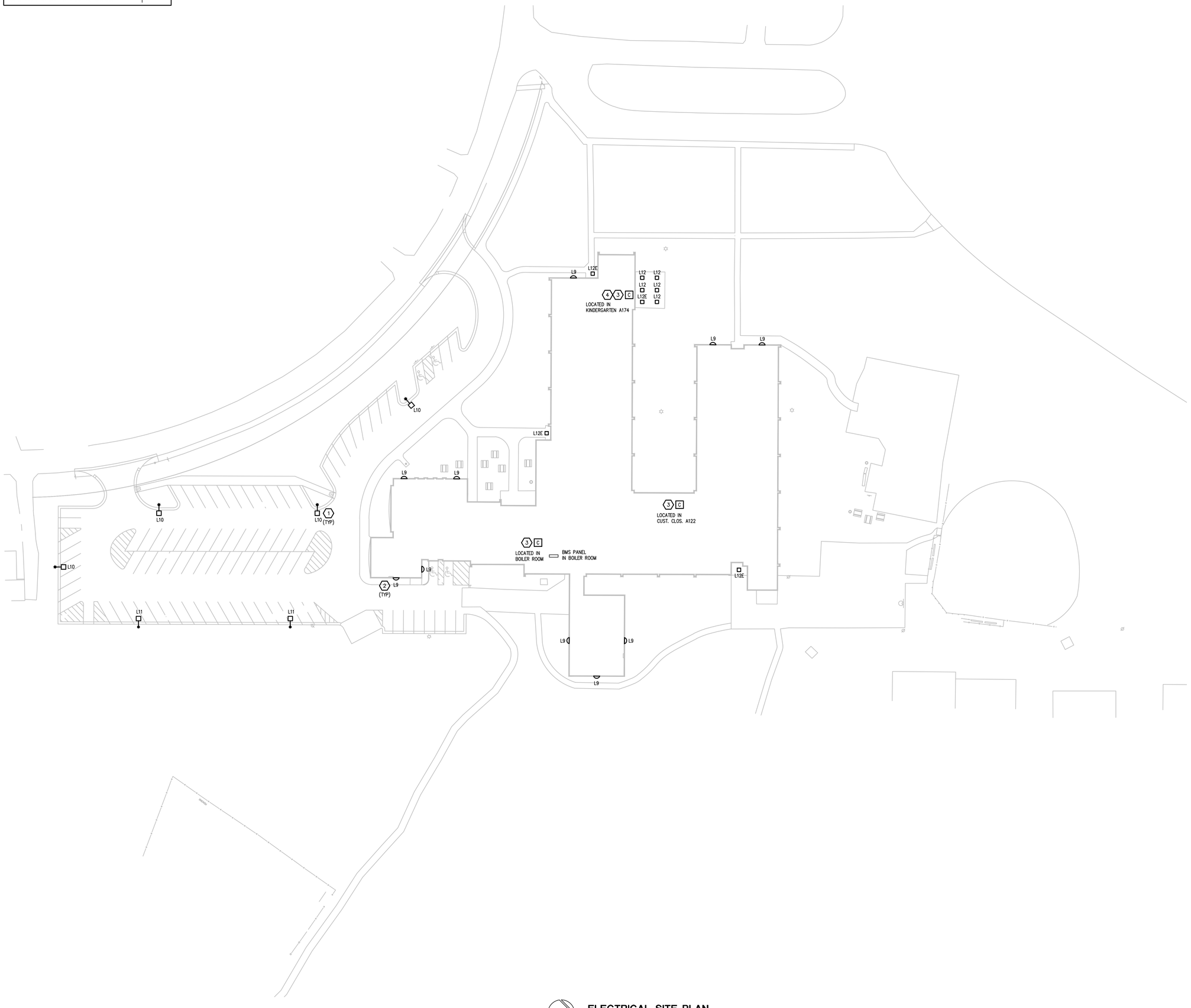

ELECTRICAL SITE PLAN

SCALE: 1" = 30'

GENERAL NOTES:

1. THESE NOTES ARE GENERIC GUIDELINES ONLY. ELECTRICAL CONTRACTOR'S PERSONNEL ON SITE SHALL BE THOROUGHLY FAMILIAR WITH THE PUBLISHED SPECIFICATIONS FOR EXACT DESCRIPTIONS OF SCOPE, METHODS, AND MATERIAL.
2. THESE DRAWINGS REPRESENT THE GENERAL EXTENT AND ARRANGEMENT OF SYSTEMS, BUT ARE NOT TO BE CONSIDERED FABRICATION DRAWINGS. COORDINATE WITH OTHER TRADES, AND PROVIDE EACH SYSTEM COMPLETE, INCLUDING ALL NECESSARY COMPONENTS, FITTINGS, AND OFFSETS.
3. CONDUCT A SURVEY TO IDENTIFY ALL UNDERGROUND UTILITIES. CALL 811 PRIOR TO EXCAVATION.
4. UTILITIES SHOWN ON THESE DRAWINGS ARE FOR REFERENCE ONLY. COORDINATE EXACT LOCATION OF ALL EXISTING UTILITIES, AND ROUTING OF ALL NEW UNDERGROUND UTILITIES PRIOR TO EXCAVATION.
5. DEWATER TRENCHES PRIOR TO INSTALLATION OF CONDUITS. PROVIDE WATER TIGHT FITTINGS ON ALL UNDERGROUND CONDUITS.
6. COORDINATE DEMOLITION WORK, AND ELECTRICAL AND TELEPHONE SERVICES TO THE SITE, WITH THE RESPECTIVE LOCAL UTILITY COMPANY REPRESENTATIVES PRIOR TO COMMENCEMENT OF WORK. INCLUDE ALL ASSOCIATED COST/FEES BY THE UTILITY COMPANIES IN THE BID PRICE.
7. INSTALL UNDERGROUND CONDUITS 42" BELOW FINISHED GRADE, MINIMUM, UNLESS NOTED OTHERWISE.
8. COORDINATE SERVICE SHUT-DOWNS WITH ALL TRADES INVOLVED ON SITE AND OBTAIN WRITTEN AUTHORIZATION FROM OWNER 72 HOURS PRIOR TO ANY ELECTRICAL AND/OR TELEPHONE SHUT-DOWN.
9. REMOVE ALL DE-ENERGIZED CONDUCTORS FROM SITE AT COMPLETION OF THE PROJECT.
10. OUTDOOR LIGHTING BRANCH CIRCUIT WIRING SHALL BE MINIMUM #8 AWG CONDUCTORS (XHHW-2), IN MINIMUM 1" DIA. CONDUIT, UNLESS NOTED OTHERWISE.
11. SPARE CONDUITS SHALL INCLUDE PULL STRING AND SHALL BE TERMINATED WITH A CAP.
12. EXCAVATE THE ENTIRE LENGTH OF TRENCH TO PROPERLY SET DUCT ELEVATIONS.

CONSTRUCTION KEY NOTES:

1. REMOVE EXISTING SITE LIGHTING FIXTURE HEAD(S) AND PROVIDE NEW AS INDICATED. CIRCUIT NEW FIXTURE HEAD TO EXISTING BRANCH CIRCUIT. MODIFY POLE AS REQUIRED TO ACCEPT NEW MOUNTING BRACKET. COORDINATE EXACT REQUIREMENTS WITH LIGHT FIXTURE MANUFACTURER.
2. REMOVE EXISTING LIGHT FIXTURE AND PROVIDE NEW AS INDICATED. CIRCUIT NEW FIXTURE TO EXISTING BRANCH CIRCUIT. EXTEND CONDUIT AND WIRE AS REQUIRED.
3. REMOVE TIME CLOCK CONTROLLER PROVIDE NEW CONTACTOR FOR EXTERIOR LIGHTING. REWORK EXISTING CIRCUITS FROM LIGHTING PANEL AS REQUIRED TO CIRCUIT THROUGH NEW CONTACTOR. NEW CONTACTOR TO BE CONTROLLED BY EXISTING BUILDING MANAGEMENTS SYSTEM. REFER TO E7 SERIES DRAWINGS FOR DETAIL. BMS PANEL LOCATED ON LOWER LEVEL OF BOILER ROOM.
4. EXISTING TIME CLOCK IS MOUNTED NEAR CEILING. NEW CEILINGS ARE BEING INSTALLED APPROXIMATELY 12" BELOW EXISTING CEILING (COORDINATE EXACT CEILING HEIGHT WITH ARCHITECTURAL ELEVATIONS). NEW CONTACTOR WILL NEED TO BE INSTALLED BELOW NEW CEILING HEIGHT. REWORK EXISTING BRANCH CIRCUITING AS REQUIRED.

Know what's **below.**
Call before you dig.

WAKELY ASSOCIATES, INC.
ARCHITECTS & ENGINEERS

30500 VAN DYKE AVE.
SUITE M-7
WARREN, MICHIGAN, 48093

TEL. 586-573-4100
FAX. 586-573-0822
E-MAIL: WA@WAKELYAIA.COM

Peter Basso Associates Inc
CONSULTING ENGINEERS
5145 Livernois, Suite 100
Troy, Michigan 48098-3276
Tel: 248-879-5668
Fax: 248-879-0007
www.PeterBassoAssociates.com
PBA Project No.: 2015-0144

FARMINGTON PUBLIC SCHOOLS - 2015 BOND
2018 PROJECTS
KENBROOK & BEECHVIEW ELEMENTARY SCHOOLS

KENBROOK ELEMENTARY SCHOOL

ELECTRICAL SITE PLAN

PRELIMINARY	☐
DESIGN DEVELOPMENT	☐
CONSTRUCTION	■
FINAL RECORD	☐

DRAWN BY:	JRD
CHECKED BY:	GJZ

REVISIONS:

DATE: 12-15-17

SHEET NO.: E0.3KB

JOB NO.: 171712A

g:\2015\2015-0144-00\Cad\kenbrook es\2015-0144-E0-SP.dwg, E0.3KB, 12/12/2017 2:24:25 PM, Suha A. Matti, _Default.pc3 ,0.1, Peter Basso Associates Inc.

THE FOLLOWING DIMENSION EQUALS ONE INCH WHEN PRINTED TO SCALE.

KEY PLAN

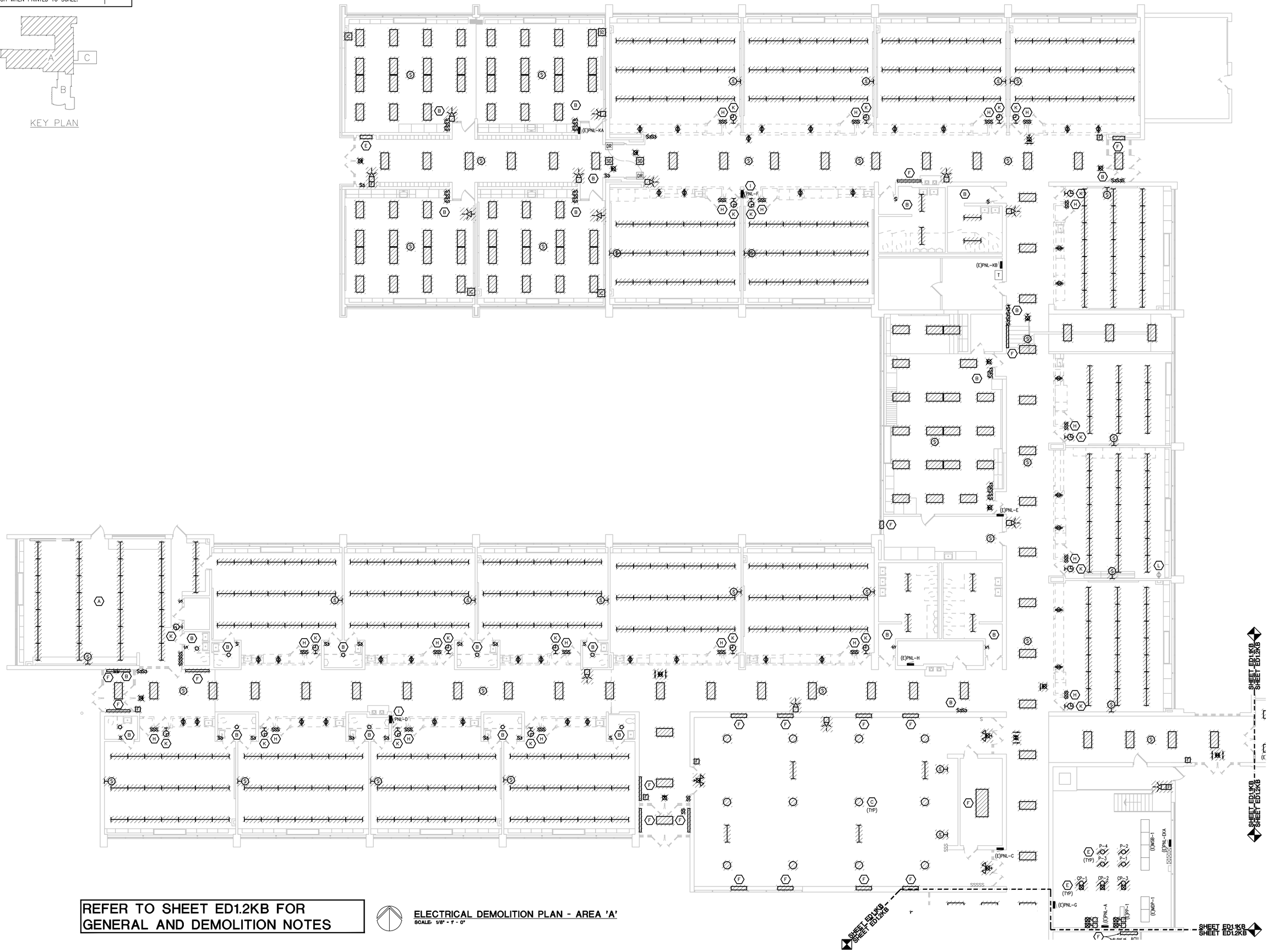

REFER TO SHEET ED1.2KB FOR GENERAL AND DEMOLITION NOTES

ELECTRICAL DEMOLITION PLAN - AREA 'A'

SCALE: 1/8" = 1' - 0"

WAKELY ASSOCIATES, INC.
ARCHITECTS & ENGINEERS

30500 VAN DYKE AVE.
SUITE M-7
WARREN, MICHIGAN, 48093

TEL. 586-573-4100
FAX. 586-573-0822
E-MAIL: WA@WAKELYAIA.COM

Peter Basso Associates Inc
CONSULTING ENGINEERS
5145 Livernois, Suite 100
Troy, Michigan 48098-3276
Tel: 248-879-5668
Fax: 248-879-0007
www.PeterBassoAssociates.com
PBA Project No.: 2015-0144

FARMINGTON PUBLIC SCHOOLS - 2015 BOND
2018 PROJECTS
KENBROOK & BEECHVIEW ELEMENTARY SCHOOLS

KENBROOK ELEMENTARY SCHOOL

ELECTRICAL DEMOLITION PLAN - AREA 'A'

PRELIMINARY ☐
DESIGN DEVELOPMENT ☐
CONSTRUCTION ■
FINAL RECORD ☐

DRAWN BY: JRD
CHECKED BY: GJZ

REVISIONS:

DATE: 12-15-17

SHEET NO.:

ED1.1KB

JOB NO.: 171712A

g:\2015\2015-0144-00\Cad\kenbrook es\2015-0144-ED1-DP1.dwg, ED1.1KB, 12/12/2017 2:24:37 PM, Suha A. Matti, _Default.pc3 ,0.09699, Peter Basso Associates Inc.

THE FOLLOWING DIMENSION EQUALS ONE INCH WHEN PRINTED TO SCALE.

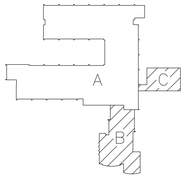

KEY PLAN

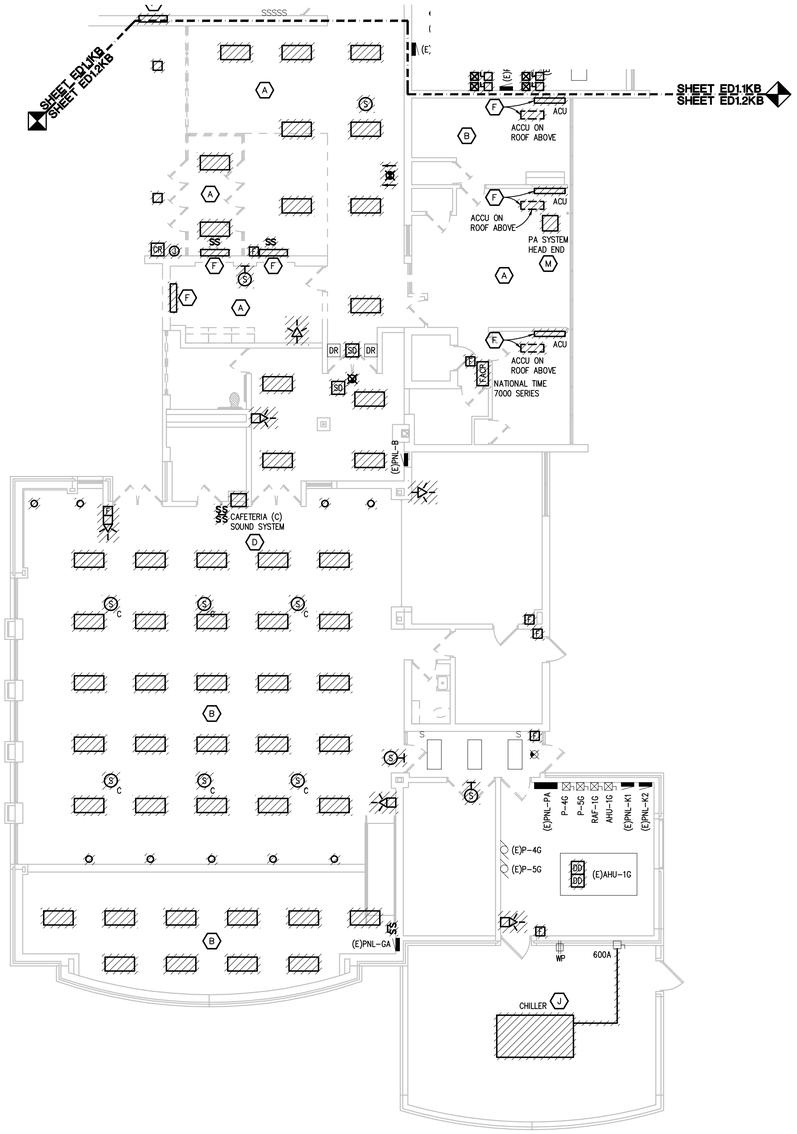

HVAC PIPING NEW WORK PLAN - AREA 'B'

SCALE: 1/8" = 1' - 0"

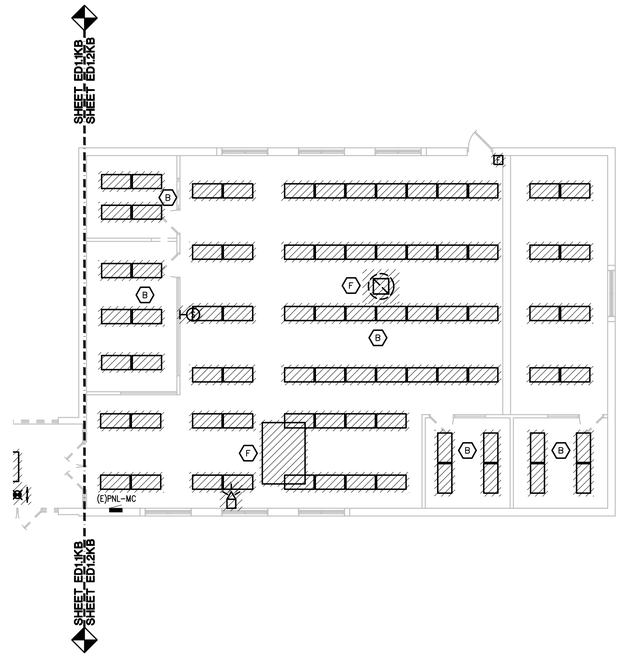

HVAC PIPING NEW WORK PLAN - AREA 'C'

SCALE: 1/8" = 1' - 0"

GENERAL NOTES:

1. VISIT THE SITE PRIOR TO SUBMISSION OF BID TO EXAMINE THE EXISTING CONDITIONS AND THE EXTENT OF DEMOLITION WORK.
2. EXAMINE THE DRAWINGS OF OTHER TRADES AND BE FAMILIAR WITH THE DEMOLITION REQUIRED BY OTHER TRADES. PERFORM ALL INCIDENTAL ELECTRICAL DEMOLITION AND/OR RELOCATION REQUIRED TO FACILITATE THE DEMOLITION WORK OF OTHER TRADES, WHETHER OR NOT SPECIFICALLY INDICATED.
3. REMOVE LIGHTING FIXTURES AND ELECTRICAL DEVICES AS INDICATED ON PLAN WITH CROSS HATCHING. DEMOLITION SHALL INCLUDE, BUT NOT BE LIMITED TO, THOSE DEVICES SHOWN.
4. COORDINATE WITH NEW WORK PLANS, ONE LINE DIAGRAMS AND RISER DIAGRAMS FOR EXTENT OF DEMOLITION WORK.
5. PROVIDE PROPER SUPPORT FOR EXISTING TO REMAIN CONDUITS AND BOXES WHERE EXISTING SUPPORT IS TO BE REMOVED. RE-ROUTE BRANCH CIRCUIT CONDUITS AND RELOCATE JUNCTION BOXES AS REQUIRED TO FACILITATE INSTALLATION OF NEW EQUIPMENT AND SYSTEMS IN CEILING SPACES.
6. REMOVE ALL CONDUIT AND WIRE BACK TO THE SOURCE OR NEAREST UPSTREAM DEVICE REMAINING IN SERVICE.
7. MAINTAIN ELECTRICAL SERVICE TO ALL LIGHTING FIXTURES, DEVICES AND EQUIPMENT THAT ARE TO REMAIN. EXTEND CONDUIT AND WIRE AS REQUIRED WHERE DEMOLITION WORK AFFECTS ELECTRICAL SERVICE TO DOWNSTREAM LOADS THAT ARE TO REMAIN.
8. DISPOSE OF ALL MATERIALS OFF SITE AND INCLUDE ALL COSTS FOR DISPOSAL IN BID. ALL MATERIALS SHALL BE DISPOSED OF IN ACCORDANCE WITH ALL FEDERAL, STATE, AND LOCAL REGULATIONS, INCLUDING TCLP TESTING, PROPER DISPOSAL AND/OR RECYCLING OF FLUORESCENT LAMPS.
9. PROVIDE BLANK COVER PLATES WHERE SWITCHES AND DEVICES ARE REMOVED BUT EXISTING WALLS REMAIN INTACT.
10. RING OUT AND TAG ALL CIRCUITS AFFECTED BY THIS ALTERATION AT BOTH ENDS. MARK ALL UNUSED CIRCUIT BREAKERS "SPARE".
11. PROVIDE UPDATED TYPED-IN DIRECTORIES FOR ALL PANELS AFFECTED BY THIS ALTERATION.
12. VERIFY ALL UNDERGROUND AND IN SLAB UTILITY LOCATIONS PRIOR TO SAW-CUTTING OR PENETRATING ANY FLOOR SLAB.
13. COORDINATE ANY SHUT DOWN OF EXISTING SERVICES AND EQUIPMENT THAT ARE REMAINING IN USE WITH THE OWNER'S REPRESENTATIVE. WHERE EXISTING BUILDING SERVICE IS REQUIRED TO BE SHUT DOWN, INCLUDE ALL ASSOCIATED OVERTIME COSTS TO PERFORM THIS WORK DURING WEEKENDS AND EVENINGS INCLUDE ALL COSTS FOR PROVIDING TEMPORARY POWER WHERE SHUT DOWNS MUST OCCUR FOR PERIODS LONGER THAN THESE HOURS. COORDINATE ELECTRICAL SHUT DOWNS WITH THE OWNER 72 HOURS PRIOR TO SHUT DOWN.

(#) DEMOLITION NOTES:

A. REMOVE ALL ELECTRICAL DEVICES ON WALLS TO BE DEMOLISHED (LIGHTING, POWER, FIRE ALARM, P.A., ETC.) INCLUDING CEILING MOUNTED LIGHTING. MAINTAIN BRANCH CIRCUIT SERVING LIGHTING FOR CONNECTION TO NEW LIGHTING. ANY DEVICE LOCATED ON WALL(S) NOT TO BE DEMOLISHED IS TO REMAIN (WALLS TO BE DEMOLISHED ARE SHOWN AS DASHED).

B. REMOVE LIGHT FIXTURES, SWITCH, AND COVERPLATE COMPLETE. LIGHTING BRANCH CIRCUIT SERVING ROOM SHALL REMAIN FOR REUSE.

C. REMOVE LIGHT FIXTURES COMPLETE. EXISTING LIGHTING BRANCH CIRCUIT TO REMAIN FOR REUSE.

D. ALTERNATE E2KB: REMOVE IN ROOM SOUND SYSTEM COMPLETE. REMOVE ASSOCIATED SPEAKERS, CABLING, AND CONDUIT AS REQUIRED.

E. MECHANICAL EQUIPMENT TO BE REMOVED. DISCONNECT ASSOCIATED BRANCH CIRCUIT AND/OR FEEDER AS REQUIRED. FEEDER/BRANCH CIRCUIT TO REMAIN FOR REUSE.

F. MECHANICAL EQUIPMENT TO BE REMOVED. DISCONNECT ASSOCIATE BRANCH CIRCUIT AND/OR FEEDER AS REQUIRED AND REMOVE COMPLETE BACK TO SOURCE (CONDUIT AND WIRE). REMOVE ASSOCIATED STARTER AND/OR DISCONNECT SWITCH AS REQUIRED.

G. REMOVE RECEPTACLE AND COVER PLATE. BACK BOX AND BRANCH CIRCUIT TO REMAIN FOR REUSE.

H. REMOVE LIGHT FIXTURES, CONTROLS, AND BRANCH CIRCUIT COMPLETE. CUT CONDUIT FLUSH WITH CONCRETE AND CAP TO ALLOW FOR NEW FLOOR INSTALLATION.

I. PANELBOARD TO BE REMOVED. PROVIDE PULLBOX IN CEILING SPACE ABOVE FOR BRANCH CIRCUITS THAT EXISTING TO REMAIN TO BE EXTENDED TO NEW PANEL LOCATION. SIZE PULLBOX PER NEC REQUIREMENTS. REFER TO E3 SERIES DRAWINGS FOR NEW PANEL LOCATION.

J. CHILLER TO BE REMOVED. DISCONNECT ASSOCIATED FEEDER AND REMOVE COMPLETE (CONDUIT AND WIRE) BACK TO DISCONNECT SWITCH AS INDICATED. DISCONNECT SWITCH AND FEEDER TO (E)MSB-1 TO REMAIN.

K. CLOCK TO BE RELOCATED. REMOVE, PROTECT, AND STORE FOR REINSTALLATION. WHERE IS IS BEING REMOVED, REMOVE CLOCK BACKBOX COMPLETE. WHERE WALL IS EXISTING TO REMAIN, PROVIDE NEW PAINTABLE STEEL COVER AT EXISTING CLOCK BACKBOX. EXISTING CLOCK CIRCUIT TO REMAIN FOR REUSE.

L. RELOCATE RECEPTACLE AT TOP OF DUAL CHANNEL RACEWAY TO 6" BELOW NEW CEILING HEIGHT. COORDINATE CEILING HEIGHT WITH ARCHITECTURAL ELEVATIONS. PROVIDE NEW RACEWAY COMPONENTS AND COVER PIECES AS REQUIRED. REWORK EXISTING BRANCH CIRCUIT AS REQUIRED.

M. REMOVE PA SYSTEM COMPLETE. REMOVE ALL SPEAKERS, INTERCOM CALL BUTTONS, ACCESSORIES, AND CABLING COMPLETE. RACEWAYS AND BACK BOXES MAY BE LEFT FOR REUSE WHERE NEW EQUIPMENT IS BEING INSTALLED. COORDINATE LOCATIONS OF NEW EQUIPMENT WITH E3 SERIES DRAWINGS.

WAKELY ASSOCIATES, INC.
ARCHITECTS & ENGINEERS

30500 VAN DYKE AVE.
SUITE M-7
WARREN, MICHIGAN, 48093

TEL. 586-573-4100
FAX. 586-573-0822
E-MAIL: WA@WAKELYAIA.COM

Peter Basso Associates Inc
CONSULTING ENGINEERS
5145 Livernois, Suite 100
Troy, Michigan 48098-3276
Tel: 248-879-5668
Fax: 248-879-0007
www.PeterBassoAssociates.com
PBA Project No.: 2015-0144

FARMINGTON PUBLIC SCHOOLS - 2015 BOND
2018 PROJECTS
KENBROOK & BEECHVIEW ELEMENTARY SCHOOLS

KENBROOK ELEMENTARY SCHOOL

ELECTRICAL DEMOLITION PLAN - AREA 'B' AND 'C'

PRELIMINARY ☐
DESIGN DEVELOPMENT ☐
CONSTRUCTION ■
FINAL RECORD ☐

DRAWN BY: JRD
CHECKED BY: GJZ

REVISIONS:

DATE: 12-15-17

SHEET NO.:

ED1.2KB

JOB NO.: 171712A

g:\2015\2015-0144-00\Cad\kenbrook es\2015-0144-ED1-DP1.dwg, ED1.2KB, 12/12/2017 2:24:40 PM, Suha A. Matti, _Default.pc3 ,0.09699, Peter Basso Associates Inc.

THE FOLLOWING DIMENSION EQUALS ONE INCH WHEN PRINTED TO SCALE.

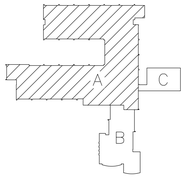

KEY PLAN

REFER TO SHEET E2.2KB FOR GENERAL AND CONSTRUCTION NOTES

LIGHTING PLAN - AREA 'A'

SCALE: 1/8" = 1' - 0"

WAKELY ASSOCIATES, INC.
ARCHITECTS & ENGINEERS

30500 VAN DYKE AVE.
SUITE M-7
WARREN, MICHIGAN, 48093

TEL. 586-573-4100
FAX. 586-573-0822
E-MAIL: WA@WAKELYAIA.COM

Peter Basso Associates Inc
CONSULTING ENGINEERS
5145 Livernois, Suite 100
Troy, Michigan 48098-3276
Tel: 248-879-5668
Fax: 248-879-0007
www.PeterBassoAssociates.com
PBA Project No.: 2015-0144

FARMINGTON PUBLIC SCHOOLS - 2015 BOND
2018 PROJECTS
KENBROOK & BEECHVIEW ELEMENTARY SCHOOLS

KENBROOK ELEMENTARY SCHOOL

LIGHTING PLAN - AREA 'A'

PRELIMINARY ☐
DESIGN DEVELOPMENT ☐
CONSTRUCTION ■
FINAL RECORD ☐

DRAWN BY: JRD
CHECKED BY: GJZ

REVISIONS:

DATE: 12-15-17

SHEET NO.: E2.1KB

JOB NO.: 171712A

g:\2015\2015-0144-00\Cad\kenbrook es\2015-0144-E2-LP1.dwg, E2.1KB, 12/12/2017 2:24:55 PM, Suha A. Matti, _Default.pc3 ,0.09699, Peter Basso Associates Inc.

THE FOLLOWING DIMENSION EQUALS ONE INCH WHEN PRINTED TO SCALE.

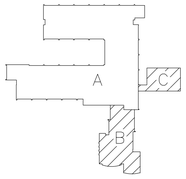

KEY PLAN

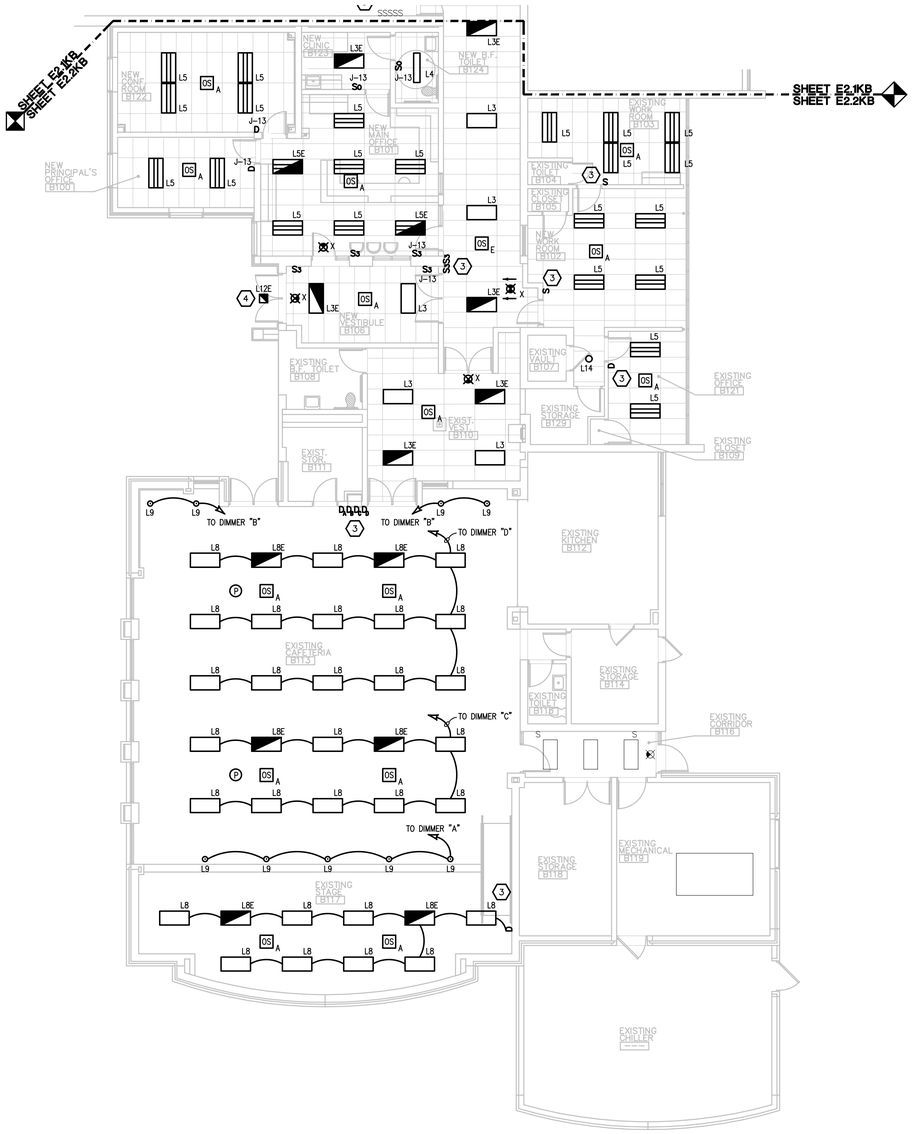

LIGHTING PLAN - AREA 'B'

SCALE: 1/8" = 1' - 0"

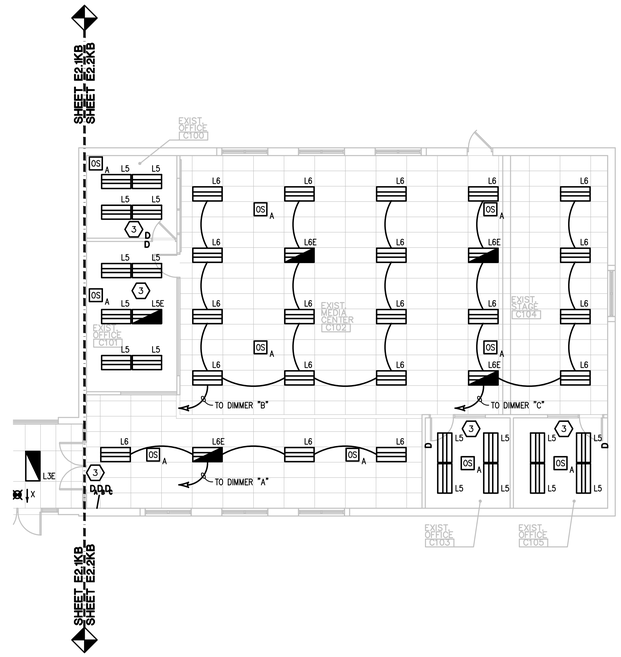

LIGHTING PLAN - AREA 'C'

SCALE: 1/8" = 1' - 0"

GENERAL NOTES:

1. THESE DRAWINGS REPRESENT THE GENERAL EXTENT AND ARRANGEMENT OF SYSTEMS, BUT ARE NOT TO BE CONSIDERED FABRICATION DRAWINGS. COORDINATE WITH OTHER TRADES, AND PROVIDE EACH SYSTEM COMPLETE, INCLUDING ALL NECESSARY COMPONENTS, FITTINGS, AND OFFSETS.
2. INSTALL SYSTEMS SUCH THAT REQUIRED CLEARANCE AND SERVICE ACCESS SPACE IS PROVIDED AROUND ALL MECHANICAL AND ELECTRICAL EQUIPMENT, AND AROUND ANY COMPONENTS WHICH REQUIRE SERVICE ACCESS.
3. COORDINATE AND PROVIDE ACCESS DOORS WITHIN INACCESSIBLE CEILING, SHAFT, AND CHASE AREAS FOR ALL COMPONENTS WHICH REQUIRE SERVICE ACCESS. REFER TO ARCHITECTURAL DRAWINGS FOR CEILING TYPES.
4. PROVIDE SUPPLEMENTARY STEEL AS REQUIRED FOR THE PROPER SUPPORT OF ALL SYSTEMS.
5. TRANSFORMER SECONDARY CONDUCTORS SHALL BE SIZED IN ACCORDANCE WITH TRANSFORMER CIRCUIT SIZING SCHEDULE SHOWN ON "ELECTRICAL STANDARD SCHEDULES DRAWING" UNLESS OTHERWISE NOTED.
6. MOTOR CIRCUIT PROTECTION SHALL BE SIZED IN ACCORDANCE WITH MOTOR CIRCUIT SIZING SCHEDULES SHOWN ON "ELECTRICAL STANDARD SCHEDULES DRAWING" UNLESS OTHERWISE NOTED.
7. COORDINATE THE MOUNTING HEIGHTS OF DEVICES WITH ARCHITECTURAL ELEVATIONS AND THE TRADES INSTALLING THE WORK.
8. COORDINATE EXACT LOCATIONS OF ALL FLOOR BOXES WITH FINAL FURNITURE LAYOUT DRAWINGS.
9. REFER TO MECHANICAL SCHEDULE SHEETS FOR ELECTRICAL REQUIREMENTS FOR MECHANICAL EQUIPMENT. PROVIDE ALL CONNECTIONS, STARTERS, DISCONNECTS, ETC. AS REQUIRED BY SCHEDULES AND WHERE NOTED ELSEWHERE. VERIFY REQUIREMENTS OF ALL MECHANICAL EQUIPMENT WITH SHOP DRAWINGS SUBMITTALS. NOTIFY ENGINEER OF ANY CONFLICTS BETWEEN EQUIPMENT SUBMITTALS AND ELECTRICAL DRAWINGS. WHERE CIRCUIT SIZES ARE SHOWN ON THE ELECTRICAL DRAWINGS THAT DIFFER FROM WHAT IS INDICATED ON THE MECHANICAL SCHEDULES, PROVIDE THE CIRCUIT OF HIGHER AMPACITY.
10. REFER TO TEMPERATURE CONTROLS SHEETS FOR REQUIRED MOTOR CONTROLLERS. PROVIDE ALL ACCESSORIES INDICATED.
11. PROVIDE THE DESIGN AND INSTALLATION FOR A COMPLETE AND FUNCTIONAL FIRE ALARM SYSTEM IN ACCORDANCE WITH SPECIFICATIONS, DRAWINGS, AND ALL APPLICABLE CODES. THE FIRE ALARM VENDOR SHALL PROVIDE LAYOUT DRAWINGS INDICATING THE REQUIRED QUANTITIES AND LOCATIONS OF MANUAL PULL STATIONS, NOTIFICATION APPLIANCES, SMOKE AND HEAT DETECTORS, CONTROL MODULES, INTERFACE MODULES, MODULES FOR SPRINKLER FLOW AND TAMPER SWITCHES, ALL CONTROL PANELS, POWER SUPPLIES, ADDITIONAL DEVICES AND EQUIPMENT REQUIRED. COORDINATE LOCATIONS OF DEVICES WITH ARCHITECTURAL FINISHES AND REFLECTED CEILING PLANS, INCLUDING ADDITIONAL SMOKE AND HEAT DETECTORS REQUIRED FOR NON-SMOOTH CEILING APPLICATIONS. INCLUDE ALLOWANCES FOR ADJUSTMENT OF DEVICES BY THE ARCHITECT AT THE TIME OF SUBMITTAL TO COORDINATE WITH BUILDING FINISHES AND OTHER CEILING ELEMENTS.
12. CIRCUIT EXIT SIGNS UNSWITCHED TO HOT LEG OF LIGHTING BRANCH CIRCUIT SERVING SPACE.
13. IN SPACES INDICATED TO RECEIVE NEW LIGHTING. PROVIDE OCCUPANCY/VACANCY/PHOTOCELL CONTROL AS REQUIRED TO COMPLY WITH ASHRAE 90.1-2013. REVISE CIRCUITING AS REQUIRED FOR NEW CONTROLS. REFER TO E7 SERIES DRAWING FOR TYPICAL CLASSROOM LIGHTING CONTROLS.
14. EXTEND CIRCUIT GROUND AS REQUIRED PER NEC WHERE NEW LIGHTING IS BEING ADDED OR WHERE EXISTING LIGHTING IS REMOVED AND REPLACED.

CONSTRUCTION KEY NOTES:

1. PROVIDE (2) 20A-1P CIRCUIT BREAKERS IN EXISTING SPACES FOR CLASSROOM LIGHTING BRANCH CIRCUITS (CIRCUITS KB-14 AND KB-16).
2. CIRCUIT NEW OCCUPANCY SENSOR TO EXISTING LIGHTING BRANCH CIRCUIT SO THAT LIGHT FIXTURES (EXISTING FIXTURES MAY NOT BE INDICATED) ARE CONTROLLED BY EXISTING SWITCHES (NOT INDICATED) AND NEW OCCUPANCY SENSOR. REWORK SWITCH LEG AS REQUIRED.
3. CIRCUIT LIGHT FIXTURES TO EXISTING LIGHTING BRANCH SERVING SPACE. REWORK SWITCH LEG AND EXTEND CONDUIT AND WIRE AS REQUIRED. WHERE DIMMING SWITCHES ARE INDICATED, PROVIDE NEW 0-10V CABLING. COORDINATE CABLING REQUIREMENTS WITH DIMMING SWITCH AND LIGHT FIXTURE DRIVER MANUFACTURERS.
4. CIRCUIT TO NEAREST AVAILABLE EXTERIOR LIGHTING BRANCH CIRCUIT AND CONTROLS. REFER TO SHEET E0.3KB FOR EXTERIOR LIGHT FIXTURE LOCATIONS.

WA

WAKELY ASSOCIATES, INC.
ARCHITECTS & ENGINEERS

30500 VAN DYKE AVE.
SUITE M-7
WARREN, MICHIGAN, 48093

TEL. 586-573-4100
FAX. 586-573-0822
E-MAIL: WA@WAKELYAIA.COM

Peter Basso Associates Inc
CONSULTING ENGINEERS
5145 Livernois, Suite 100
Troy, Michigan 48098-3776
Tel: 248-879-5668
Fax: 248-879-0007
www.PeterBassoAssoc.sites.com
PBA Project No.: 2015-0144

FARMINGTON PUBLIC SCHOOLS - 2015 BOND
2018 PROJECTS
KENBROOK & BEECHVIEW ELEMENTARY SCHOOLS

KENBROOK ELEMENTARY SCHOOL

LIGHTING PLAN - AREA 'B' AND 'C'

PRELIMINARY ☐
DESIGN DEVELOPMENT ☐
CONSTRUCTION ■
FINAL RECORD ☐

DRAWN BY: JRD
CHECKED BY: GJZ

REVISIONS:

DATE: 12-15-17

SHEET NO.: E2.2KB

JOB NO.: 171712A

g:\2015\2015-0144-00\Cad\kenbrook es\2015-0144-E2-LP1.dwg, E2.2KB, 12/12/2017 2:24:57 PM, Suha A. Matti, _Default.pc3 ,0.09699, Peter Basso Associates Inc.

THE FOLLOWING DIMENSION EQUALS ONE INCH WHEN PRINTED TO SCALE.

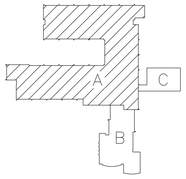

KEY PLAN

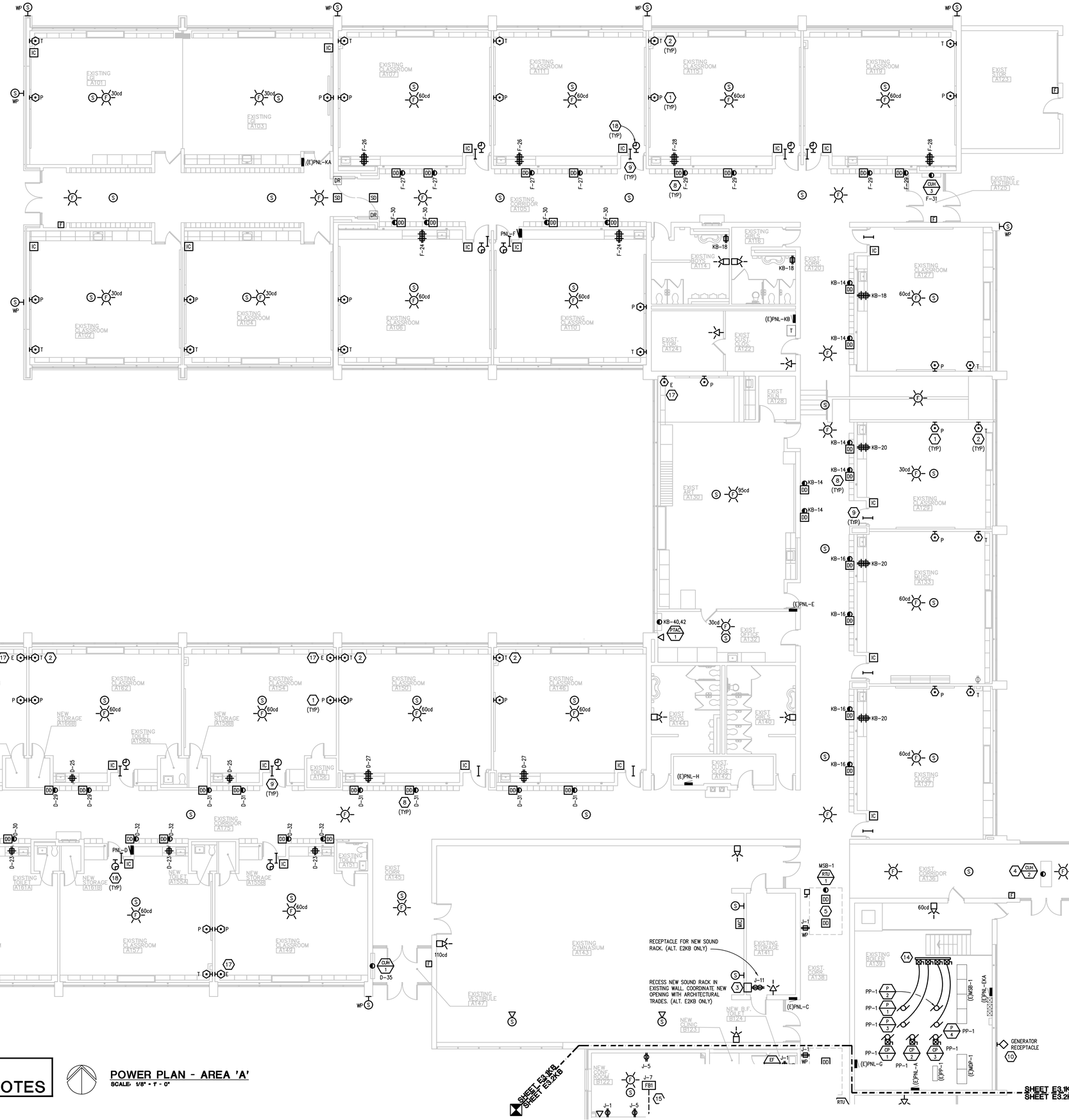

REFER TO SHEET E3.2KB FOR GENERAL AND CONSTRUCTION NOTES

POWER PLAN - AREA 'A'

SCALE: 1/8" = 1' - 0"

WAKELY ASSOCIATES, INC.
ARCHITECTS & ENGINEERS

30500 VAN DYKE AVE.
SUITE M-7
WARREN, MICHIGAN, 48093

TEL. 586-573-4100
FAX. 586-573-0822
E-MAIL: WA@WAKELYAIA.COM

Peter Basso Associates Inc
CONSULTING ENGINEERS
5145 Livernois, Suite 100
Troy, Michigan 48098-3276
Tel: 248-879-5668
Fax: 248-879-0007
www.PeterBassoAssociates.com
PBA Project No.: 2015-0144

FARMINGTON PUBLIC SCHOOLS - 2015 BOND
2018 PROJECTS
KENBROOK & BEECHVIEW ELEMENTARY SCHOOLS

KENBROOK ELEMENTARY SCHOOL

POWER PLAN - AREA 'A'

PRELIMINARY ☐
DESIGN DEVELOPMENT ☐
CONSTRUCTION ■
FINAL RECORD ☐

DRAWN BY: JRD
CHECKED BY: GJZ

REVISIONS:

DATE: 12-15-17

SHEET NO.: E3.1KB

JOB NO.: 171712A

g:\2015\2015-0144-00\Cad\kenbrook es\2015-0144-E3-PP1.dwg, E3.1KB, 12/12/2017 2:25:11 PM, Suha A. Matti, _Default.pc3 ,0.09699, Peter Basso Associates Inc.

THE FOLLOWING DIMENSION EQUALS ONE INCH WHEN PRINTED TO SCALE.

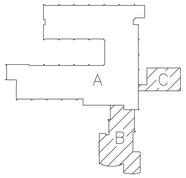

KEY PLAN

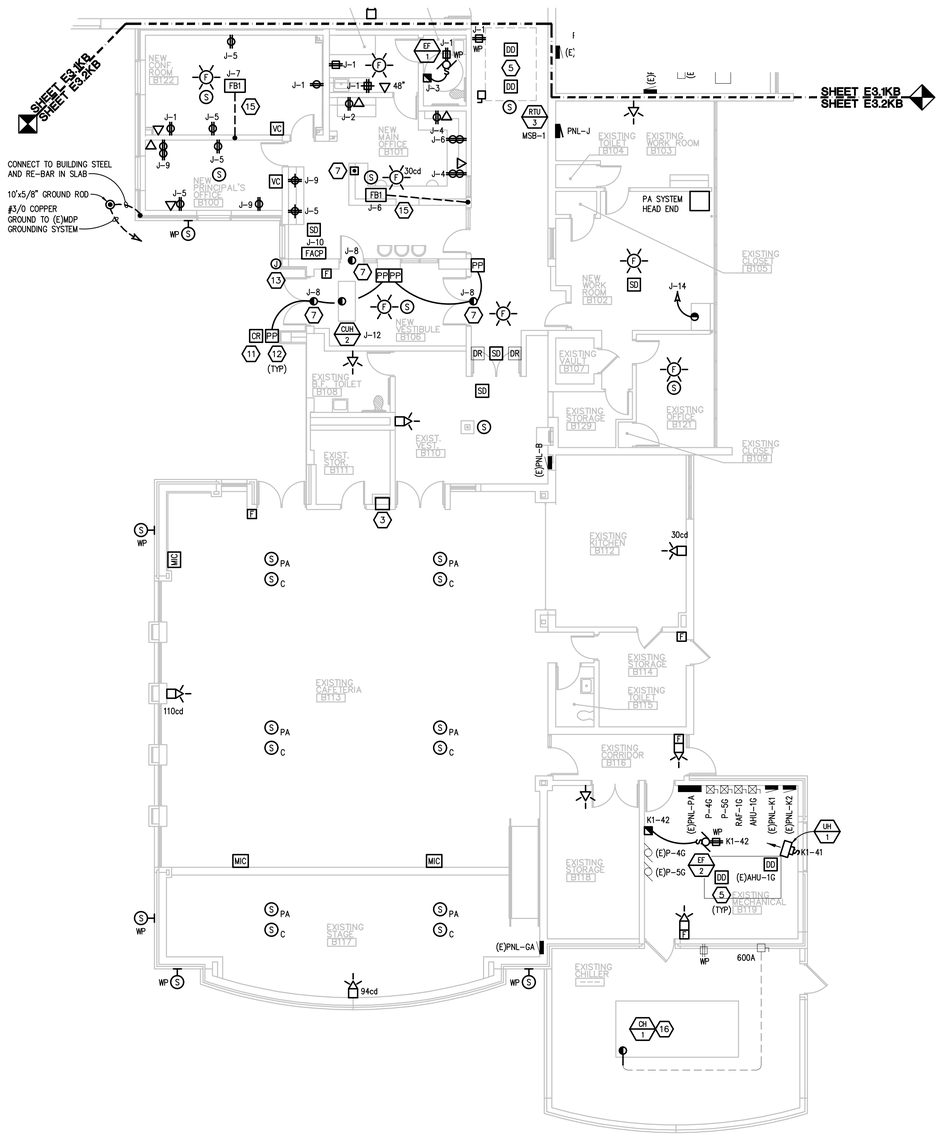

POWER PLAN - AREA 'B'

SCALE: 1/8" = 1' - 0"

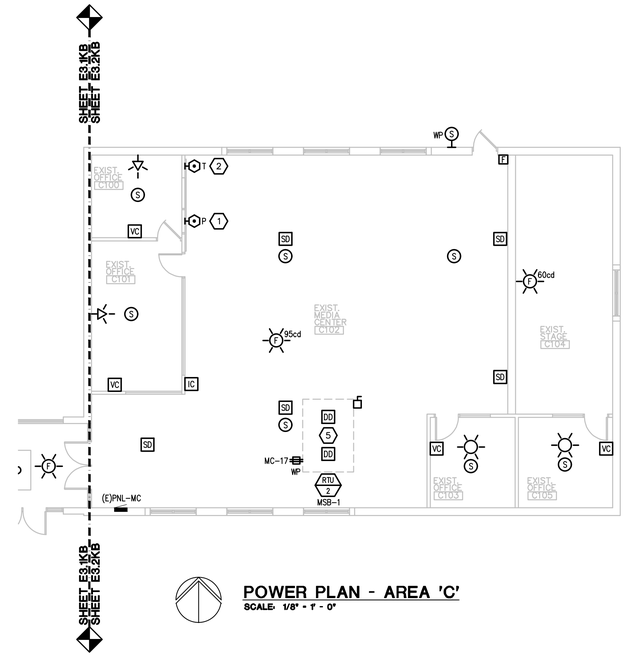

POWER PLAN - AREA 'C'

SCALE: 1/8" = 1' - 0"

GENERAL NOTES:

1. THESE DRAWINGS REPRESENT THE GENERAL EXTENT AND ARRANGEMENT OF SYSTEMS, BUT ARE NOT TO BE CONSIDERED FABRICATION DRAWINGS. COORDINATE WITH OTHER TRADES, AND PROVIDE EACH SYSTEM COMPLETE, INCLUDING ALL NECESSARY COMPONENTS, FITTINGS, AND OFFSETS.
2. INSTALL SYSTEMS SUCH THAT REQUIRED CLEARANCE AND SERVICE ACCESS SPACE IS PROVIDED AROUND ALL MECHANICAL AND ELECTRICAL EQUIPMENT, AND AROUND ANY COMPONENTS WHICH REQUIRE SERVICE ACCESS.
3. COORDINATE AND PROVIDE ACCESS DOORS WITHIN INACCESSIBLE CEILING, SHAFT, AND CHASE AREAS FOR ALL COMPONENTS WHICH REQUIRE SERVICE ACCESS. REFER TO ARCHITECTURAL DRAWINGS FOR CEILING TYPES.
4. PROVIDE SUPPLEMENTARY STEEL AS REQUIRED FOR THE PROPER SUPPORT OF ALL SYSTEMS.
5. TRANSFORMER SECONDARY CONDUCTORS SHALL BE SIZED IN ACCORDANCE WITH TRANSFORMER CIRCUIT SIZING SCHEDULE SHOWN ON "ELECTRICAL STANDARD SCHEDULES DRAWING" UNLESS OTHERWISE NOTED.
6. MOTOR CIRCUIT PROTECTION SHALL BE SIZED IN ACCORDANCE WITH MOTOR CIRCUIT SIZING SCHEDULES SHOWN ON "ELECTRICAL STANDARD SCHEDULES DRAWING" UNLESS OTHERWISE NOTED.
7. COORDINATE THE MOUNTING HEIGHTS OF DEVICES WITH ARCHITECTURAL ELEVATIONS AND THE TRADES INSTALLING THE WORK.
8. COORDINATE EXACT LOCATIONS OF ALL FLOOR BOXES WITH FINAL FURNITURE LAYOUT DRAWINGS.
9. REFER TO MECHANICAL SCHEDULE SHEETS FOR ELECTRICAL REQUIREMENTS FOR MECHANICAL EQUIPMENT. PROVIDE ALL CONNECTIONS, STARTERS, DISCONNECTS, ETC. AS REQUIRED BY SCHEDULES AND WHERE NOTED ELSEWHERE. VERIFY REQUIREMENTS OF ALL MECHANICAL EQUIPMENT WITH SHOP DRAWINGS SUBMITTALS. NOTIFY ENGINEER OF ANY CONFLICTS BETWEEN EQUIPMENT SUBMITTALS AND ELECTRICAL DRAWINGS. WHERE CIRCUIT SIZES ARE SHOWN ON THE ELECTRICAL DRAWINGS THAT DIFFER FROM WHAT IS INDICATED ON THE MECHANICAL SCHEDULES, PROVIDE THE CIRCUIT OF HIGHER AMPACITY.
10. REFER TO TEMPERATURE CONTROLS SHEETS FOR REQUIRED MOTOR CONTROLLERS. PROVIDE ALL ACCESSORIES INDICATED.
11. PROVIDE THE DESIGN AND INSTALLATION FOR A COMPLETE AND FUNCTIONAL FIRE ALARM SYSTEM IN ACCORDANCE WITH SPECIFICATIONS, DRAWINGS, AND ALL APPLICABLE CODES. THE FIRE ALARM VENDOR SHALL PROVIDE LAYOUT DRAWINGS INDICATING THE REQUIRED QUANTITIES AND LOCATIONS OF MANUAL PULL STATIONS, NOTIFICATION APPLIANCES, SMOKE AND HEAT DETECTORS, CONTROL MODULES, INTERFACE MODULES, MODULES FOR SPRINKLER FLOW AND TAMPER SWITCHES, ALL CONTROL PANELS, POWER SUPPLIES, ADDITIONAL DEVICES AND EQUIPMENT REQUIRED. COORDINATE LOCATIONS OF DEVICES WITH ARCHITECTURAL FINISHES AND REFLECTED CEILING PLANS, INCLUDING ADDITIONAL SMOKE AND HEAT DETECTORS REQUIRED FOR NON-SMOOTH CEILING APPLICATIONS. INCLUDE ALLOWANCES FOR ADJUSTMENT OF DEVICES BY THE ARCHITECT AT THE TIME OF SUBMITTAL TO COORDINATE WITH BUILDING FINISHES AND OTHER CEILING ELEMENTS.
12. CIRCUIT EXIT SIGNS UNSWITCHED TO HOT LEG OF LIGHTING BRANCH CIRCUIT SERVING SPACE.
13. IN SPACES INDICATED TO RECEIVE NEW LIGHTING. PROVIDE OCCUPANCY/VACANCY/PHOTOCELL CONTROL AS REQUIRED TO COMPLY WITH ASHRAE 90.1-2013. REVISE CIRCUITING AS REQUIRED FOR NEW CONTROLS. REFER TO E7 SERIES DRAWING FOR TYPICAL CLASSROOM LIGHTING CONTROLS.
14. EXTEND CIRCUIT GROUND AS REQUIRED PER NEC WHERE NEW LIGHTING IS BEING ADDED OR WHERE EXISTING LIGHTING IS REMOVED AND REPLACED.

CONSTRUCTION KEY NOTES:

1. REFER TO SHORT THROW PROJECTOR DETAIL ON E7 SERIES DRAWINGS FOR POWER AND DATA RACEWAY REQUIREMENTS AT NEW PROJECTOR. COORDINATE EXACT LOCATION WITH ARCHITECTURAL DRAWINGS AND TECHNOLOGY CONTRACTOR. WHERE NO CIRCUIT IS INDICATED, EXTEND EXISTING BRANCH CIRCUIT THAT PREVIOUSLY SERVED TELEVISION TO NEW PROJECTOR LOCATION.
2. REFER TO TEACHER STATION RACEWAY DETAIL ON E7 SERIES DRAWINGS FOR POWER AND DATA RACEWAY REQUIREMENTS AT TEACHER STATION. COORDINATE EXACT LOCATION WITH ARCHITECTURAL DRAWINGS AND TECHNOLOGY CONTRACTOR. CIRCUIT RECEPTACLES AS INDICATED.
3. ALTERNATE E2KB: PROVIDE NEW SOUND EQUIPMENT RACK. REFER TO DETAIL ON E7 SERIES DRAWINGS FOR REQUIREMENTS.
4. CIRCUIT NEW MECHANICAL EQUIPMENT TO EXISTING FEEDER AND/OR BRANCH CIRCUIT AS REQUIRED. EXTEND CONDUIT AND WIRE AS REQUIRED.
5. DUCT SMOKE DETECTORS. COORDINATE REQUIRED QUANTITIES AND MOUNTING LOCATIONS WITH EXISTING DUCT WORK TO MEED CODE. (PROVIDE 4 DUCT SMOKE DETECTORS PER AHU/RTU/AC FOR BID PURPOSES. QUANTITIES WILL BE ADJUSTED IN FIELD BAST ON EXISTING DUCT WORK PENETRATIONS AND ROUTING LOCATIONS). COORDINATE INSTALLATION WITH THE EXISTING MECHANICAL DUCT WORK SO THAT UPON DETECTION OF SMOKE, THE SUPPLY/RETURN FAN WILL SHUT DOWN. CONTRACTOR SHALL WIRE DUCT SMOKE DETECTOR TO FIRE ALARM SYSTEM. CONTROL OF AIR HANDLING EQUIPMENT IS VIA THE FIRE ALARM CONTROL PANEL. PROVIDE ALL REQUIRED FIRE ALARM CONTROL MODULES AND RELAYS TO INTERFACE WITH SUPPLY FAN AND ASSOCIATED RETURN FAN (OR EXHAUST FAN). PROVIDE ALL CONTROL MODULES, RELAYS, ETC. FOR A COMPLETE OPERATING SYSTEM.
6. CIRCUIT RECEPTACLE TO EXISTING BRANCH CIRCUIT. EXTEND CONDUIT AND WIRE AS REQUIRED.
7. PROVIDE 120V CIRCUIT IN CEILING SPACE FOR DOOR SECURITY AND CONTROLS. REFER TO ARCHITECTURAL FLOOR PLANS, DOOR HARDWARE SCHEDULE ON ARCHITECTURAL DRAWINGS, ACCESS CONTROL SYSTEM SPECIFICATION SECTION, AND ACCESS CONTROL DOOR DIAGRAM(S) ON E7 SERIES DRAWINGS FOR RACEWAY AND BACK BOX REQUIREMENTS FOR DOOR OR BANK OF DOORS INDICATED. PROVIDE ALL RACEWAYS AND BACK BOXES REQUIRED. COORDINATE WITH DOOR HARDWARE CONTRACTOR. PROVIDE 1" CONDUIT FROM ARCHITECTURAL CASE WORK FOR DOOR RELEASE PUSH BUTTON TO ACCESSIBLE CEILING SPACE ABOVE DOORS FOR SECURITY DOOR RELEASE. COORDINATE LOCATION OF PUSH BUTTON WITH OWNER PRIOR TO INSTALLATION.
8. SMOKE DAMPER DUCT SMOKE DETECTOR SHALL BE PROVIDED BY ELECTRICAL CONTRACTOR. COORDINATE INSTALLATION WITH THE MECHANICAL CONTRACTOR SO THAT UPON DETECTION OF SMOKE, THE SUPPLY/RETURN FAN SERVING THE SPACE WILL SHUT DOWN. ELECTRICAL CONTRACTOR SHALL WIRE DUCT SMOKE DETECTOR TO FIRE ALARM SYSTEM, AND CIRCUIT DAMPER ACTUATOR FROM 120V CIRCUIT AS INDICATED. PROVIDE A 20A-1P SWITCH AT EACH ACTUATOR. CONTROL OF AIR HANDLING EQUIPMENT AND DAMPER ACTUATOR IS VIA THE FIRE ALARM CONTROL PANEL. PROVIDE ALL REQUIRED CONTROL MODULES AND RELAYS. COORDINATE WORK WITH THE TEMPERATURE CONTROL CONTRACTOR AND FIRE ALARM VENDOR. DAMPER SHALL CLOSE UPON DETECTION OF SMOKE AND SHUT DOWN ASSOCIATED AHU. DAMPER SHALL ALSO CLOSE UPON NORMAL SHUT DOWN OF AHU. PROVIDE ALL CONTROL MODULES, RELAYS, ETC. FOR A COMPLETE SYSTEM.
9. PROVIDE (1) 2" CONDUIT FOR TECHNOLOGY (OR AS SPECIFIED) AND (1) 1" CONDUITS FOR F.A. AND P.A. SYSTEM WIRINGS. STUB CONDUITS FROM THE CORRIDOR CEILING SPACE INTO INDICATED ROOM CEILING SPACE. PROVIDE PLASTIC BUSHINGS AT EACH END. PROVIDE REMOVABLE/RESEALABLE FIRE STOP PUTTY IN EACH CONDUIT AND FIRESTOP AROUND EACH CONDUIT. COORDINATE WITH TECHNOLOGY CONTRACTOR FOR EXACT LOCATION OF THE CONDUITS.
10. PROVIDE NEW RECEPTACLE FOR PORTABLE GENERATOR CONNECTION. REFER TO E5 SERIES DRAWINGS FOR REQUIREMENTS.
11. PROVIDE 2-GANG JUNCTION BOX WITH 3/4"C TO ABOVE ACCESSIBLE CEILING FOR CARD READER. PROVIDE CONDUIT WITH NYLON PULLSTRING. PROVIDE BLANK COVERPLATE AT JUNCTION BOX. COORDINATE EXACT LOCATION WITH ARCHITECTURAL TRADES.
12. PROVIDE 2-GANG JUNCTION BOX WITH 3/4"C TO ABOVE ACCESSIBLE CEILING FOR DOOR OPERATOR PUSHPAD. PROVIDE CONDUIT WITH NYLON PULLSTRING. PROVIDE BLANK COVERPLATE AT JUNCTION BOX. COORDINATE EXACT LOCATION WITH ARCHITECTURAL TRADES.
13. PROVIDE 2-GANG JUNCTION BOX WITH 3/4"C TO ABOVE ACCESSIBLE CEILING FOR AIPHONE. PROVIDE CONDUIT WITH NYLON PULLSTRING. PROVIDE BLANK COVERPLATE AT JUNCTION BOX. COORDINATE EXACT LOCATION WITH ARCHITECTURAL TRADES.
14. PROVIDE NEW STRUCTURAL STEEL RACK FOR NEW PUMP STARTERS. PROVIDE ALL PIECES AND COMPONENTS AS REQUIRED FOR A COMPLETE SYSTEM.
15. PROVIDE (1) 3/4" CONDUIT FOR POWER AND (1) 1 1/4" CONDUIT FOR DATA AT NEW FLOOR BOX. ROUTE CONDUITS UP TO ABOVE ACCESSIBLE CEILING AS INDICATED. PROVIDE PLASTIC END BUSHING AND NYLON PULL STRING FOR DATA CONDUIT.
16. PROVIDE (3) 500KCMIL & (1) #3 (G) IN 4"C. FROM EXISTING DISCONNECT SWITCH TO NEW CHILLER CONTROL PANEL. COORDINATE NEW CHILLER CONNECTION POINT WITH MECHANICAL TRADES PRIOR TO INSTALLING CONDUITS. CONDUITS SHALL BE INSTALLED BELOW GRADE. REFER TO RACEWAY APPLICATION SCHEDULE ON SHEET E0.2 FOR CONDUIT REQUIREMENTS.
17. REFER TO TEACHER STATION RACEWAY DETAIL ON E7 SERIES DRAWINGS FOR POWER AND DATA RACEWAY REQUIREMENTS AT TEACHER STATION. COORDINATE EXACT LOCATION WITH ARCHITECTURAL DRAWINGS AND TECHNOLOGY CONTRACTOR. CIRCUIT RECEPTACLES AS INDICATED.
18. RELOCATED CLOCK. PROVIDE NEW BACK BOX AND ACCESSORIES AS REQUIRED.. COORDINATE REQUIREMENTS WITH CLOCK MANUFACTURER NATIONAL TIME AND SIGNAL. EXTEND EXISTING CLOCK CIRCUIT TO NEW LOCATION.

WA

WAKELY ASSOCIATES, INC.
ARCHITECTS & ENGINEERS

30500 VAN DYKE AVE.
SUITE M-7
WARREN, MICHIGAN, 48093

TEL. 586-573-4100
FAX. 586-573-0822
E-MAIL: WA@WAKELYAIA.COM

Peter Basso Associates Inc
CONSULTING ENGINEERS
5145 Livernois, Suite 100
Troy, Michigan 48098-3276
Tel: 248-879-5668
Fax: 248-879-0007
www.PeterBassoAssociates.com
PBA Project No.: 2015-0144

FARMINGTON PUBLIC SCHOOLS - 2015 BOND
2018 PROJECTS
KENBROOK & BEECHVIEW ELEMENTARY SCHOOLS

KENBROOK ELEMENTARY SCHOOL

POWER PLAN - AREA 'B' AND 'C'

PRELIMINARY ☐
DESIGN DEVELOPMENT ☐
CONSTRUCTION ■
FINAL RECORD ☐

DRAWN BY: JRD
CHECKED BY: GJZ

REVISIONS:

DATE: 12-15-17

SHEET NO.: E3.2KB

JOB NO.: 171712A

g:\2015\2015-0144-00\Cad\kenbrook es\2015-0144-E3-PP1.dwg, E3.2KB, 12/12/2017 2:25:13 PM, Suha A. Matti, _Default.pc3 ,0.09699, Peter Basso Associates Inc.

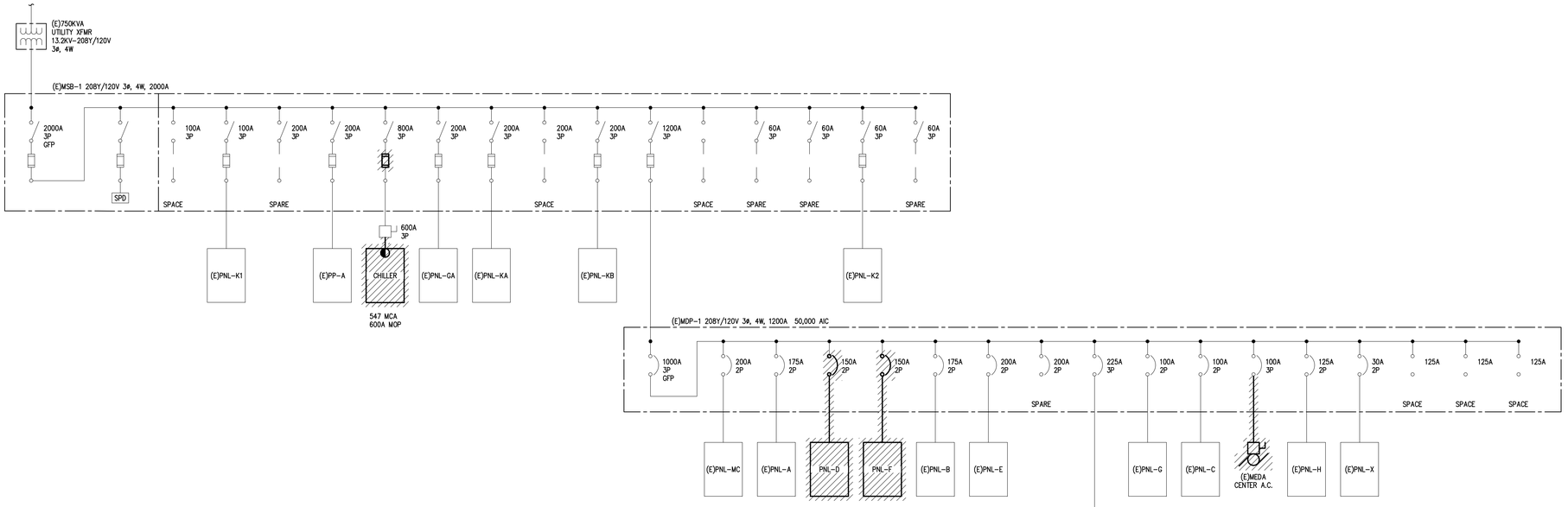

ONE LINE DIAGRAM - DEMOLITION

NO SCALE

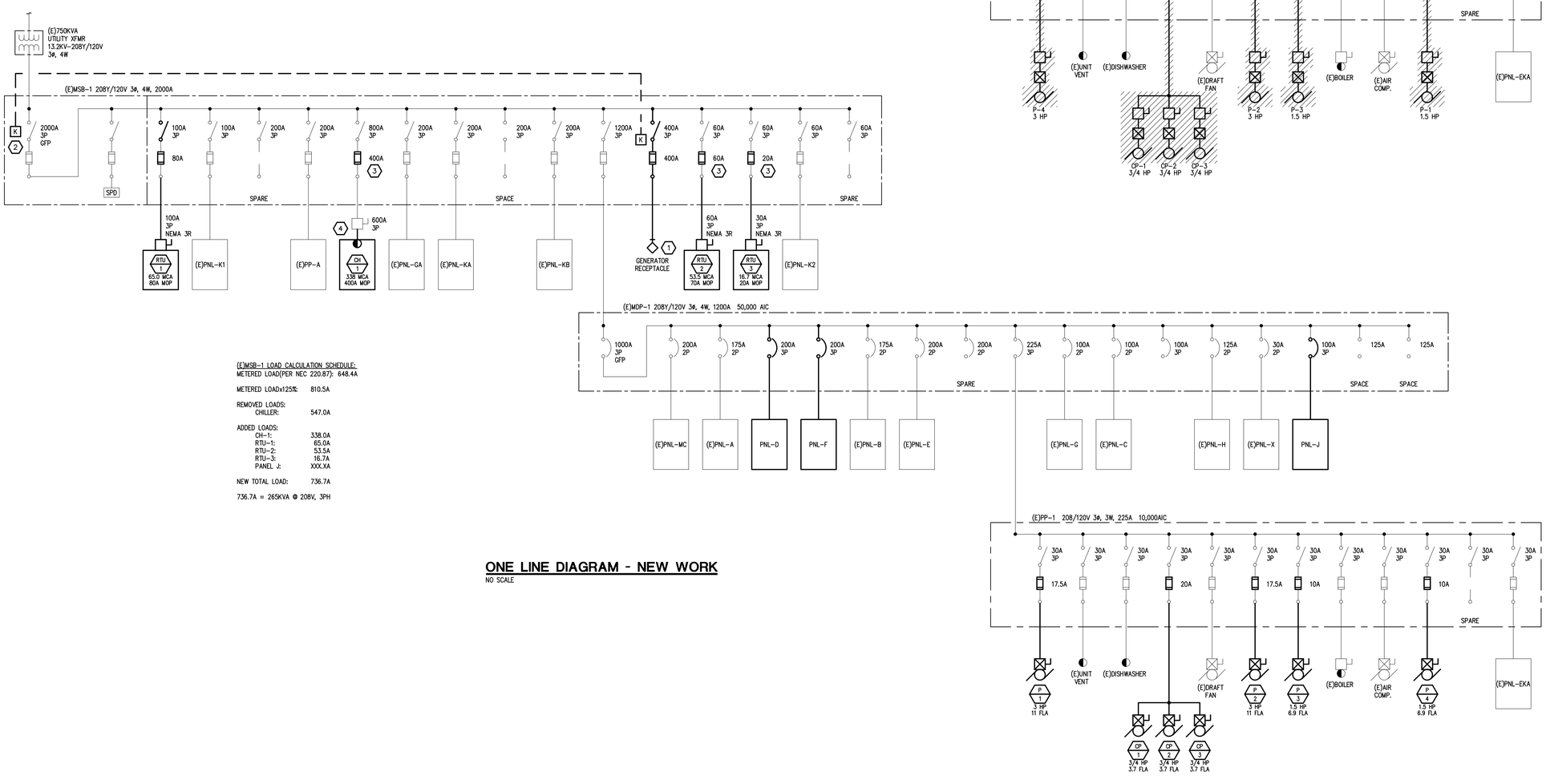

(E)MSB-1 LOAD CALCULATION SCHEDULE:
METERED LOAD(PER NEC 220.87): 648.4A

METERED LOADx125%: 810.5A

REMOVED LOADS:
CHILLER: 547.0A

ADDED LOADS:
CH-1: 338.0A
RTU-1: 65.0A
RTU-2: 53.5A
RTU-3: 16.7A
PANEL J: XXX.XA

NEW TOTAL LOAD: 736.7A

736.7A = 265KVA @ 208V, 3PH

ONE LINE DIAGRAM - NEW WORK

NO SCALE

GENERAL NOTES:

1. THESE DRAWINGS REPRESENT THE GENERAL EXTENT AND ARRANGEMENT OF SYSTEMS, BUT ARE NOT TO BE CONSIDERED FABRICATION DRAWINGS. COORDINATE WITH OTHER TRADES, AND PROVIDE EACH SYSTEM COMPLETE, INCLUDING ALL NECESSARY COMPONENTS, FITTINGS, AND OFFSETS.
2. FEEDER AND BRANCH CIRCUIT CONDUCTORS SHALL BE SIZED IN ACCORDANCE WITH THE "FEEDER AND BRANCH CIRCUIT SIZING SCHEDULE-GENERAL PURPOSE" ON THE "ELECTRICAL STANDARD SCHEDULES DRAWING" UNLESS SPECIFICALLY NOTED OTHERWISE.
3. MOTOR CIRCUIT PROTECTION SHALL BE SIZED IN ACCORDANCE WITH THE MOTOR CIRCUIT SIZING SCHEDULES ON THE "ELECTRICAL STANDARD SCHEDULES DRAWING" UNLESS SPECIFICALLY NOTED OTHERWISE.
4. BASIS OF DESIGN IS SQUARE D DISTRIBUTION EQUIPMENT. IF THE CONTRACTOR ELECTS TO PROVIDE EQUIPMENT FROM OTHER APPROVED MANUFACTURERS, THE CONTRACTOR SHALL BE RESPONSIBLE TO COORDINATE THE LAYOUT AND CLEARANCE REQUIREMENTS IN ALL SPACES CONTAINING ELECTRICAL EQUIPMENT AND PROVIDE EQUIPMENT MEETING THE SPECIFICATIONS AND ACHIEVING CODE REQUIRED CLEARANCES WITHIN THE SPACE PROVIDED.
5. BRANCH CIRCUIT CONDUCTORS, FEEDERS, AND BRANCH CIRCUIT OVERCURRENT PROTECTION ARE SIZED AT 125% OF THE TOTAL CONTINUOUS AND NON CONTINUOUS LOAD FOR LIGHTING AND MOTOR LOADS THAT RUN CONTINUOUSLY FOR THREE HOURS OR MORE (NEC 210.19 A, 210.20 A, AND 215.2 A). DEMAND AND CONNECTED LOADS ARE CALCULATED PER NEC 220.
6. VARIABLE FREQUENCY CONTROLLERS (VFC) FURNISHED BY MECHANICAL TRADES. ELECTRICAL CONTRACTOR SHALL INSTALL VFC, PROVIDE POWER FEEDER FROM DISTRIBUTION EQUIPMENT TO VFC AND PROVIDE POWER FEEDER FROM VFC TO MOTOR. REFER TO SPECIFICATIONS FOR APPLICATION OF VFC POWER CABLE FROM VFC TO MOTOR.

CONSTRUCTION KEY NOTES:

1. PROVIDE CROUSE-HINDS ARKTITE HEAVY DUTY CIRCUIT BREAKING METALLIC RECEPTACLE ASSEMBLY. RECEPTACLE ASSEMBLY TO BE 400 AMP, STYLE 1, 4 WIRE-4 POLE, 1.25" MAXIMUM CONDUCTOR SIZE WITH #4 HUB SIZE.
2. PROVIDE PLASTIC IDENTIFICATION PLACARD MOUNTED ON MDP ADJACENT TO MAIN SWITCH STATING: "SHUT OFF MAIN SWITCH VIA KIRK KEY PRIOR TO TURNING ON GENERATOR BACK-FEED. SHUT OFF FEEDER BREAKERS AS REQUIRED TO MAINTAIN LOAD ON PORTABLE GENERATOR".
3. PROVIDE NEW FUSES AS INDICATED AT EXISTING SPARE SWITCH. PROVIDE REDUCTION CLIPS AS REQUIRED.
4. PROVIDE NEW CIRCUITING (CONDUIT AND WIRE) FROM EXISTING DISCONNECT SWITCH TO NEW CHILLER.

WA
WAKELY ASSOCIATES, INC.
ARCHITECTS & ENGINEERS
30500 VAN DYKE AVE.
SUITE M-7
WARREN, MICHIGAN, 48093
TEL. 586-573-4100
FAX. 586-573-0822
E-MAIL: WA@WAKELYAIA.COM

PBA
Peter Basso Associates Inc
CONSULTING ENGINEERS
5145 Livernois, Suite 100
Troy, Michigan 48098-3276
Tel: 248-879-5668
Fax: 248-879-0007
www.PeterBassoAssociates.com
PBA Project No.: 2015-0144

FARMINGTON PUBLIC SCHOOLS - 2015 BOND
2018 PROJECTS
KENBROOK & BEECHVIEW ELEMENTARY SCHOOLS

KENBROOK ELEMENTARY SCHOOL
ONE LINE DIAGRAMS

PRELIMINARY ☐
DESIGN DEVELOPMENT ☐
CONSTRUCTION ■
FINAL RECORD ☐

DRAWN BY: JRD
CHECKED BY: GJZ

REVISIONS:

DATE: 12-15-17

SHEET NO.: E5.1KB

JOB NO.: 171712A

g:\2015\2015-0144-00\Cad\kenbrook es\2015-0144-E5-DG.dwg, E5.1, 12/12/2017 2:25:22 PM, Suha A. Matti, _Default.pc3 ,0.09699, Peter Basso Associates Inc.

PNL-D

#	LOAD TYPE	DESCRIPTION	CB TYPE	CB	VA	ØA	ØB	ØC	VA	CB	CB TYPE	DESCRIPTION	LOAD TYPE	#
1	C	(E)LOAD		20	300	600			300	20		(E)LOAD	C	2
3	C	(E)LOAD		20	300		600		300	20		(E)LOAD	C	4
5	C	(E)LOAD		20	300			600	300	20		(E)LOAD	C	6
7	C	(E)LOAD		20	300	600			300	20		(E)LOAD	C	8
9	C	(E)LOAD		20	300		600		300	20		(E)LOAD	C	10
11	C	(E)LOAD		20	300			600	300	20		(E)LOAD	C	12
13	C	(E)LOAD		20	300	600			300	20		(E)LOAD	C	14
15	C	(E)LOAD		20	300		600		300	20		(E)LOAD	C	16
17	C	(E)LOAD		20	300			600	300	20		(E)LOAD	C	18
19	C	(E)LOAD		20	300	600			300	20		(E)LOAD	C	20
21	C	(E)LOAD		20	300		600		300	20		(E)LOAD	C	22
23	R	RECEPT		20	720			2220	1500	20		LIGHTING – CLASSROOMS A149, A157, A163	L	24
25	R	RECEPT		20	540	2040			1500	20		LIGHTING – CLASSROOMS A169, A168, A162	L	26
27	R	RECEPT		20	720		2220		1500	20		LIGHTING – CLASSROOMS A154, A150, A146	L	28
29	C	SMOKE DAMPERS		20	1500			2500	1000	20		SMOKE DAMPERS	C	30
31	C	SMOKE DAMPERS		20	1500	2500			1000	20		SMOKE DAMPERS	C	32
33	M	CUH-1		20	500		500			20		SPARE		34
35	M	CUH-1		20	500			500		20		SPARE		36
37		SPARE		20						20		SPARE		38
39		SPARE		20						20		SPARE		40
41		SPARE		20						20		SPARE		42
						6940	5120	7020						
						ØA	ØB	ØC						

PANELBOARD INFORMATION
VOLTAGE: 208Y/120
BUS AMPACITY: 225A
MAIN TYPE: MLO
MINIMUM A.I.C.: 10,000
MOUNTING: FLUSH

PANELBOARD LOCATION

BRANCH CIRCUIT CONNECTED LOAD:
CONTINUOUS LOAD (C): 11600
NON-CONTINUOUS LOAD (NC):
KITCHEN LOAD (K):
RECEPTACLE BASE LOAD (R): 1980
RECEPTACLE DEMAND LOAD (R):
LIGHTING LOAD (L): 4500
TRACK LIGHTING (T):
MOTORS, HIGHEST LOAD (MH):
MOTORS, REMAINING LOAD (M): 1000
TOTAL(KVA): 19.08
TOTAL (AMPS): 52.96

FEEDER DEMAND LOAD:
X 125% 14500
X 100%
X 100%
X 100% 1980
X 100%
X 50%
X 125% 4500
(150VA/3FT)
X 125%
X 100%
X 100% 1000
TOTAL(KVA) 21.98
TOTAL (AMPS) 61.01

OVERCURRENT LOAD:
X 100% 14500
X 100%
X 100%
X 100% 1980
X 100%
X 125% 5625
X 125%
X 100%
X 100% 1000
TOTAL(KVA) 23.11
TOTAL (AMPS) 64.13

NOTES:

©Copyright 2014 by Peter Basso Associates, Inc

PNL-F

#	LOAD TYPE	DESCRIPTION	CB TYPE	CB	VA	ØA	ØB	ØC	VA	CB	CB TYPE	DESCRIPTION	LOAD TYPE	#
1		(E)LOAD		20						20		(E)LOAD		2
3		(E)LOAD		20						20		(E)LOAD		4
5		(E)LOAD		20						20		(E)LOAD		6
7		(E)LOAD		20						20		(E)LOAD		8
9		(E)LOAD		20						20		(E)LOAD		10
11		(E)LOAD		20						20		(E)LOAD		12
13		(E)LOAD		20						20		(E)LOAD		14
15		(E)LOAD		20						20		(E)LOAD		16
17		(E)LOAD		20						20		(E)LOAD		18
19		(E)LOAD		20						20		(E)LOAD		20
21		(E)LOAD		20						20		(E)LOAD		22
23	L	LIGHTING – CLASSROOMS A110, A108, A107		20	1500			2220	720	20		RECEPT	R	24
25	L	LIGHTING – CLASSROOMS A111, A115, A119		20	1500	2220			720	20		RECEPT	R	26
27	C	SMOKE DAMPERS		20	1000		1720		720	20		RECEPT	R	28
29	C	SMOKE DAMPERS		20	1000			2000	1000	20		SMOKE DAMPERS	C	30
31	M	CUH-1		20	500	500				20		SPARE		32
33		SPARE		20						20		SPARE		34
35		SPARE		20						20		SPARE		36
37		SPARE		20						20		SPARE		38
39		SPARE		20						20		SPARE		40
41		SPARE		20						20		SPARE		42
						2720	1720	4220						
						ØA	ØB	ØC						

PANELBOARD INFORMATION
VOLTAGE: 208Y/120
BUS AMPACITY: 225A
MAIN TYPE: MLO
MINIMUM A.I.C.: 10,000
MOUNTING: FLUSH

PANELBOARD LOCATION

BRANCH CIRCUIT CONNECTED LOAD:
CONTINUOUS LOAD (C): 3000
NON-CONTINUOUS LOAD (NC):
KITCHEN LOAD (K):
RECEPTACLE BASE LOAD (R): 2160
RECEPTACLE DEMAND LOAD (R):
LIGHTING LOAD (L): 3000
TRACK LIGHTING (T):
MOTORS, HIGHEST LOAD (MH):
MOTORS, REMAINING LOAD (M): 500
TOTAL(KVA): 8.66
TOTAL (AMPS): 24.04

FEEDER DEMAND LOAD:
X 125% 3750
X 100%
X 100%
X 100% 2160
X 100%
X 50%
X 125% 3000
(150VA/3FT)
X 125%
X 100%
X 100% 500
TOTAL(KVA) 9.41
TOTAL (AMPS) 26.12

OVERCURRENT LOAD:
X 100% 3750
X 100%
X 100%
X 100% 2160
X 100%
X 125% 3750
X 125%
X 100%
X 100% 500
TOTAL(KVA) 10.16
TOTAL (AMPS) 28.20

NOTES:

©Copyright 2014 by Peter Basso Associates, Inc

PNL-J

#	LOAD TYPE	DESCRIPTION	CB TYPE	CB	VA	ØA	ØB	ØC	VA	CB	CB TYPE	DESCRIPTION	LOAD TYPE	#
1	R	RECEPTACLES		20	900	2100			1200	20		COPIER RECEPTACLE	R	2
3	M	EF-1		15	250		790		540	20		RECEPTACLES	R	4
5	R	RECEPTACLES		20	900			1620	720	20		RECEPTACLES	R	6
7	R	FLOORBOX RECEPTACLE		20	360	1360			1000	20		DOOR HARDWARE	C	8
9	R	RECEPTACLES		20	720		1920		1200	20		FIRE ALARM CONTROL PANEL	C	10
11	R	DYNAMISUM SOUND SYSTEM (ALT E2K9)		20	1000			1500	500	20		CABINET UNIT HEATER	M	12
13	L	LIGHTING		20	750	1850			1200	15		MZH-1	MH	14
15		SPARE		20						20		SPARE		16
17		SPARE		20						20		SPARE		18
19		SPARE		20						20		SPARE		20
21		SPARE		20						20		SPARE		22
23		SPARE		20						20		SPARE		24
25		SPARE		20						20		SPARE		26
27		SPARE		20						20		SPARE		28
29		SPARE		20						20		SPARE		30
						5410	2710	3120						
						ØA	ØB	ØC						

PANELBOARD INFORMATION
VOLTAGE: 208Y/120
BUS AMPACITY: 100A
MAIN TYPE: MLO
MINIMUM A.I.C.: 10,000
MOUNTING: SURFACE

PANELBOARD LOCATION

BRANCH CIRCUIT CONNECTED LOAD:
CONTINUOUS LOAD (C): 2200
NON-CONTINUOUS LOAD (NC):
KITCHEN LOAD (K):
RECEPTACLE BASE LOAD (R): 6340
RECEPTACLE DEMAND LOAD (R):
LIGHTING LOAD (L): 750
TRACK LIGHTING (T):
MOTORS, HIGHEST LOAD (MH): 1200
MOTORS, REMAINING LOAD (M): 750
TOTAL(KVA): 11.24
TOTAL (AMPS): 31.20

FEEDER DEMAND LOAD:
X 125% 2750
X 100%
X 100%
X 100% 6340
X 50%
X 100% 750
(150VA/3FT)
X 125% 1500
X 100% 750
TOTAL(KVA) 12.09
TOTAL (AMPS) 33.56

OVERCURRENT LOAD:
X 100% 2750
X 100%
X 100%
X 100% 6340
X 100%
X 125% 938
X 125%
X 100% 1500
X 100% 750
TOTAL(KVA) 12.28
TOTAL (AMPS) 34.08

NOTES:

©Copyright 2014 by Peter Basso Associates, Inc

(E)PNL-KB

#	LOAD TYPE	DESCRIPTION	CB TYPE	CB	VA	ØA	ØB	ØC	VA	CB	CB TYPE	DESCRIPTION	LOAD TYPE	#
1	R	(E)RECEPTACLE – RM 15	EXIST	20	500	1000			500	20	EXIST	(E)UNIT VENT – RM 22	M	2
3	R	(E)RECEPTACLE – RM 15	EXIST	20	500		1000		500	20	EXIST	(E)WIREMOLD – RM 13	R	4
5	R	(E)RECEPTACLE – RM 15	EXIST	20	500			1000	500	20	EXIST	(E)EXHAUST FAN – KILN RM	M	6
7	R	(E)RECEPTACLE – RM 15	EXIST	20	500	1000			500	20	EXIST	(E)WIREMOLD – RM 23	R	8
9	R	(E)RECEPTACLE – RM 15	EXIST	20	500		2000		1500	30	EXIST	(E)COPY MACHINE	R	10
11	R	(E)RECEPTACLE – RM 14	EXIST	20	500			2000	1500		EXIST		R	12
13	R	(E)RECEPTACLE – RM 14	EXIST	20	500	2000			1500	20	NEW	SMOKE DAMPERS	C	14
15	R	(E)RECEPTACLE – RM 14	EXIST	20	500		1500		1000	20	NEW	SMOKE DAMPERS	C	16
17	R	(E)RECEPTACLE – RM 14	EXIST	20	500			1220	720	20	NEW	RECEPTACLES	R	18
19	R	(E)WIREMOLD – RM 21	EXIST	20	500	1580			1080	20	NEW	RECEPTACLES	R	20
21	R	(E)WIREMOLD – RM 21	EXIST	20	500		500			20	NEW	SPARE	R	22
23	R	(E)WIREMOLD – RM 21	EXIST	20	500			1000	500	20	EXIST	(E)UNIT VENT – RMS 14 & 15	M	24
25	R	(E)FLOOR RECEPT – MUSIC RM	EXIST	20	500	500				20	EXIST	SPARE		26
27	R	(E)FLOOR RECEPT – MUSIC RM	EXIST	20	500		1000		500	20	EXIST	(E)LOAD	C	28
29		SPARE						500	500	20	EXIST	(E)WIREMOLD – RM 20	R	30
31	R	(E)MUSIC RM ICS CABINET	EXIST	20	500	1000			500	20	EXIST	(E)UNIT VENT – ART RM	M	32
33	R	(E)MUSIC RM ICS CABINET	EXIST	20	500		1000		500	20	EXIST	(E)RECEPTACLE – ART RM	R	34
35	M	(E)COUNSELING PTAC	EXIST	20	500			1000	500	20	EXIST	(E)RECEPTACLE – ART RM	R	36
37	M	(E)COUNSELING PTAC	EXIST	20	500	1000			500	20	EXIST	(E)UNIT VENT – TEACHER LOUNGE	M	38
39	M	(E)UNIT VENT – RMS 12 & 13	EXIST	20	500		2788		2288		NEW	PTAC-1	MH	40
41		SPACE						2288	2288	30	NEW		MH	42
						8080	9788	9008						
						ØA	ØB	ØC						

PANELBOARD INFORMATION
VOLTAGE: 208Y/120
BUS AMPACITY: 225A
MAIN TYPE: MLO
MINIMUM A.I.C.: 10,000
MOUNTING: SURFACE

PANELBOARD LOCATION

BRANCH CIRCUIT CONNECTED LOAD:
CONTINUOUS LOAD (C): 3000
NON-CONTINUOUS LOAD (NC):
KITCHEN LOAD (K):
RECEPTACLE BASE LOAD (R): 10000
RECEPTACLE DEMAND LOAD (R): 5300
LIGHTING LOAD (L):
TRACK LIGHTING (T):
MOTORS, HIGHEST LOAD (MH): 4576
MOTORS, REMAINING LOAD (M): 4000
TOTAL(KVA): 26.88
TOTAL (AMPS): 74.60

FEEDER DEMAND LOAD:
X 125% 3750
X 100%
X 100%
X 100% 10000
X 50% 2650
X 100%
(150VA/3FT)
X 125% 5720
X 100% 4000
TOTAL(KVA) 26.12
TOTAL (AMPS) 72.50

OVERCURRENT LOAD:
X 100% 3750
X 100%
X 100%
X 100% 10000
X 100% 2650
X 125%
X 125%
X 100% 5720
X 100% 4000
TOTAL(KVA) 26.12
TOTAL (AMPS) 72.50

NOTES:

©Copyright 2014 by Peter Basso Associates, Inc

PANEL SCHEDULE INDEX		
PNL-D	PNL-F	PNL-J
(E)PNL-KB		

WA
WAKELY ASSOCIATES, INC.
ARCHITECTS & ENGINEERS
30500 VAN DYKE AVE.
SUITE M-7
WARREN, MICHIGAN, 48093
TEL: 586-573-4100
FAX: 586-573-0822
E-MAIL: WA@WAKELYAIA.COM

Peter Basso Associates Inc
CONSULTING ENGINEERS
5145 Livernois, Suite 100
Troy, Michigan 48098-3276
Tel: 248-879-5668
Fax: 248-879-0007
www.PeterBassoAssociates.com
PBA Project No.: 2015-0144

FARMINGTON PUBLIC SCHOOLS - 2015 BOND
2018 PROJECTS
KENBROOK & BEECHVIEW ELEMENTARY SCHOOLS

KENBROOK ELEMENTARY SCHOOL
PANEL SCHEDULES

PRELIMINARY ☐
DESIGN DEVELOPMENT ☐
CONSTRUCTION ■
FINAL RECORD ☐

DRAWN BY: JRD
CHECKED BY: GJZ

REVISIONS:

DATE: 12-15-17
SHEET NO.:
E5.2KB
JOB NO.: 171712A

g:\2015\2015-0144-00\Cad\kenbrook es\2015-0144-E5-SH.dwg, E5.3, 12/12/2017 2:25:35 PM, Suha A. Matti, _Default.pc3 ,0.09699, Peter Basso Associates Inc.

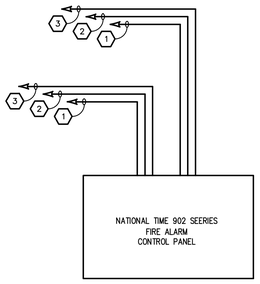

KEY NOTES:

1. ADDRESSABLE INITIATING DEVICE LOOP (SIGNALING LINE CIRCUIT), CLASS B, STYLE 4 WIRING. INCLUDES MANUAL PULL STATIONS, SMOKE DETECTORS, THERMAL DETECTORS, WATER FLOW SWITCHES, TAMPER SWITCHES, ETC. SEE PLAN DRAWINGS FOR DEVICE LOCATIONS AND QUANTITIES. PROVIDE WIRING AS SPECIFIED BY SYSTEM MANUFACTURER.

2. VISUAL NOTIFICATION APPLIANCE CIRCUIT, CLASS B, STYLE Y WIRING. SEE PLAN DRAWINGS FOR FOR DEVICE LOCATION AND QUANTITIES. PROVIDE WIRING AND NUMBER OF CIRCUITS AS REQUIRED BY SYSTEM MANUFACTURER BASED ON MANUFACTURERS CIRCUIT LOAD CALCULATIONS.

3. AUDIBLE NOTIFICATION APPLIANCE CIRCUIT, CLASS B, STYLE Y WIRING. SEE PLAN DRAWINGS FOR FOR DEVICE LOCATION AND QUANTITIES.

FIRE ALARM RISER DIAGRAM

NO SCALE

NOTE:

1. COORDINATE ROOM NAMES AND/OR NUMBERS WITH OWNER PRIOR TO FINAL PROGRAMMING.
2. PROVIDE MANUFACTURER'S FIELD SERVICES FOR SUPERVISING FINAL WIRING CONNECTIONS, INSPECTION AND ADJUSTING OF COMPLETED INSTALLATION, AND SYSTEMS DEMONSTRATION.
3. PROVIDE 2 YEAR WARRANTY PARTS AND SERVICE.

SYSTEM OUTPUTS

SYSTEM INPUTS	ACTUATE COMMON ALARM SIGNAL INDICATOR	ACTUATE EVACUATION SIGNALS	ACTUATE COMMON SUPERVISORY SIGNAL INDICATOR	ACTUATE AUDIBLE SUPERVISORY SIGNAL	ACTUATE COMMON TROUBLE SIGNAL INDICATOR	ACTUATE AUDIBLE TROUBLE SIGNAL	DISPLAY CHANGE OF STATUS	ACTUATE ALARM SEQUENCE ON EXIST FA CONTROL PNL	TRANSMIT FIRE ALARM SIGNAL TO SECURITY	TRANSMIT SUPERVISORY SIGNAL TO SECURITY	TRANSMIT TROUBLE SIGNAL TO SECURITY	RELEASE MAGNETICALLY HELD SMOKE DOORS
MANUAL FIRE ALARM BOXES	●	●					●	●	●			
SMOKE AND HEAT DETECTOR ACTIVATION	●	●					●	●	●			
DUCT DETECTOR ACTIVATION	●	●					●	●	●			
FLOW SWITCH ACTIVATION	●	●					●	●	●			●
TAMPER SWITCH ACTIVATION			●	●						●		
FIRE ALARM AC POWER FAILURE			●	●						●		
FIRE ALARM SYSTEM LOW BATTERY					●	●					●	
OPEN CIRCUIT					●	●					●	
GROUND FAULT					●	●					●	
NOTIFICATION APPLIANCE CIRCUIT SHORT					●	●					●	

FIRE ALARM MATRIX

NO SCALE

NOTES:

1. PROVIDE ALL RELAYS, CONTROL MODULES AND MATERIAL AND LABOR REQUIRED TO SHUT DOWN AIR HANDLING UNITS. COORDINATE WORK WITH THE TEMPERATURE CONTROL CONTRACTOR.
2. FIRE ALARM VENDER SHALL CONFIRM THE ABOVE OPERATION MATRIX WITH THE AUTHORITIES HAVING JURISDICTION. REVISE AS REQUIRED.

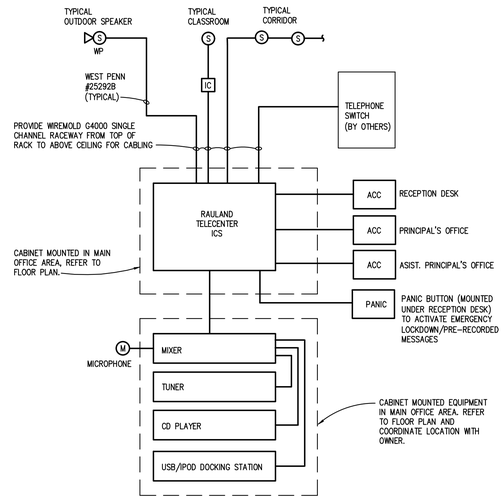

PUBLIC ADDRESS SYSTEM DETAIL

NO SCALE

NOTES:

1. REFER TO FLOOR PLANS FOR LOCATIONS OF SPEAKERS.
2. PROVIDE ALL NEW CABLING FOR THE ENTIRE SYSTEM. PROVIDE V4000 FROM ABOVE CEILING TO PA SYSTEM RACK FOR NEW CABLING.
3. INSTALL EQUIPMENT IN ACCORDANCE WITH MANUFACTURER'S INSTRUCTIONS.
4. SPLICE CABLE ONLY IN ACCESSIBLE JUNCTION BOXES OR AT TERMINAL BLOCK UNITS.
5. MAKE CABLE SHIELDS CONTINUOUS AT SPLICES AND CONNECT SPEAKER CIRCUIT SHIELD TO EQUIPMENT GROUND ONLY AT AMPLIFIER.
6. INSTALL INPUT CIRCUITS IN SEPARATE CABLES AND RACEWAYS FROM OUTPUT CIRCUITS.
7. PROVIDE PROTECTION FOR EXPOSED CABLES SUBJECT TO DAMAGE.
8. SUPPORT CABLES ABOVE ACCESSIBLE CEILINGS TO KEEP THEM FROM RESTING ON CEILING TILES. USE SPRING METAL CLIPS OR PLASTIC CABLE TIES TO SUPPORT CABLES FROM STRUCTURE. INCLUDE BRIDLE RINGS OR DRIVE RINGS.
9. USE SUITABLE CABLE FITTINGS AND CONNECTORS.
10. PROVIDE MANUFACTURER'S FIELD SERVICES FOR SUPERVISING FINAL WIRING CONNECTIONS, INSPECTION AND ADJUSTING OF COMPLETED INSTALLATION, AND SYSTEMS DEMONSTRATION.
11. ADJUST TRANSFORMER TAPS FOR APPROPRIATE SOUND LEVEL.
12. ADJUST DEVICES AND WALL PLATES TO BE FLUSH AND LEVEL.
13. SEE FLOOR PLANS FOR LOCATION OF NEW CLOCKS.
14. PROVIDE MANUFACTURER'S FIELD SERVICES FOR SUPERVISING FINAL WIRING CONNECTIONS AT MASTER CLOCK SYSTEM PANEL, INSPECTION AND ADJUSTING OF COMPLETED INSTALLATION, AND SYSTEMS DEMONSTRATION.
15. INSTALL EQUIPMENT IN ACCORDANCE WITH MANUFACTURER'S INSTRUCTIONS.
16. ALL CIRCUITING SHALL BE IN CONDUIT, WHERE REQUIRED BY THE N.E.C.

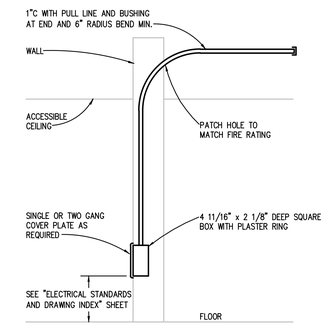

TELE/DATA OUTLET DETAIL

NO SCALE

NOTE:

IF CEILING IN ROOM IS NOT ACCESSIBLE ROUTE CONDUIT TO NEAREST ACCESSIBLE CEILING IN DIRECTION OF TELECOM ROOM.

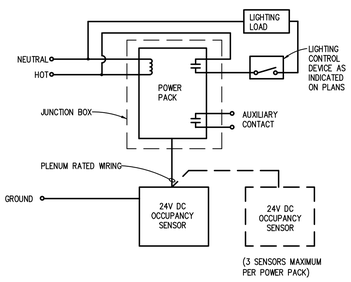

OCCUPANCY SENSOR WIRING DIAGRAM

NO SCALE

NOTES:

1. REFER TO SPECIFICATIONS FOR ACCEPTED MANUFACTURERS.
2. PROVIDE POWER PACKS AND SLAVE PACKS AS REQUIRED FOR SWITCHING AS INDICATED ON PLAN. REVISE DETAIL AS REQUIRED BY MANUFACTURER.
3. MOUNTING LOCATION PER MANUFACTURER'S RECOMMENDATION.
4. ADJUST SENSITIVITY LEVELS PER THE OWNER REQUIREMENTS.
5. PROVIDE FACTORY SUPPORT FOR AIMING/ADJUSTING OF SENSORS.
6. PLACE CEILING MOUNTED OCCUPANCY SENSORS IN CENTER OF A FULL CEILING TILE, WHERE APPLICABLE.
7. SENSOR ADJUSTMENT: BEFORE MAKING ADJUSTMENTS, MAKE SURE ROOM FURNITURE IS INSTALLED, LIGHTING CIRCUITS ARE TURNED ON, AND THE HVAC SYSTEMS ARE IN THE ON POSITION. VAV SYSTEMS SHOULD BE SET TO THEIR HIGHEST AIRFLOW. SET THE LOGIC CONFIGURATION DIP SWITCHES TO "EITHER". EITHER REQUIRES MOTION DETECTION BY ONLY ONE TECHNOLOGY. SET THE TIME DELAY PER OWNERS DIRECTION.

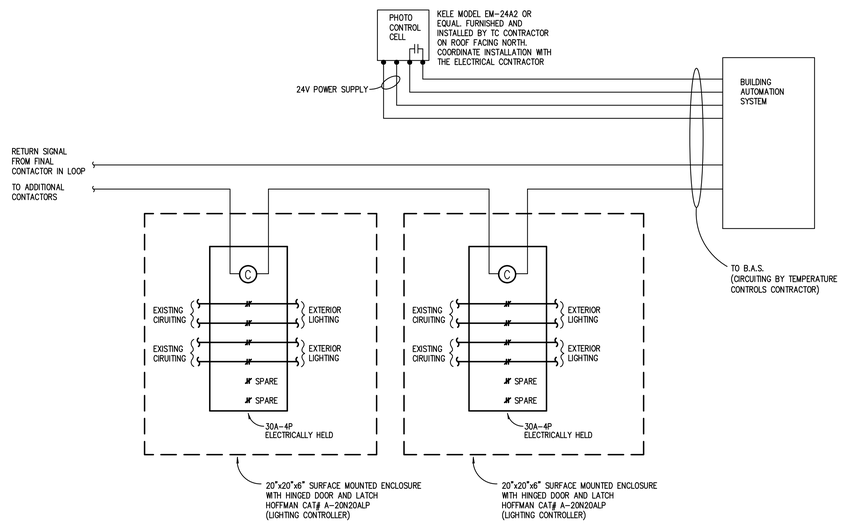

EXTERIOR LIGHTING CONTROLLER

NO SCALE

NOTES

1. PROGRAM B.A.S. SYSTEM TIME SCHEDULE PER THE OWNER'S DIRECTION.
2. LIGHTING SHALL BE PHOTO CELL ON AND BAS CONTROL OFF AS DIRECTED BY OWNER.
3. INTERCEPT EXISTING CIRCUITING AND EXTEND CIRCUITING AS REQUIRED. MATCH EXISTING WIRE SIZE. VERIFY AND CIRCUIT TRACE EXISTING CIRCUITS.

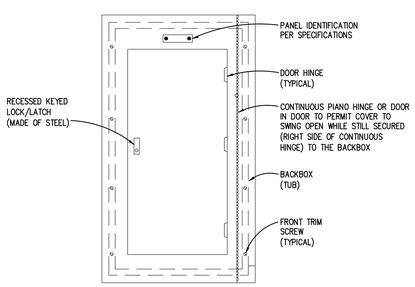

PANELBOARD FRONT COVER DETAIL

NO SCALE

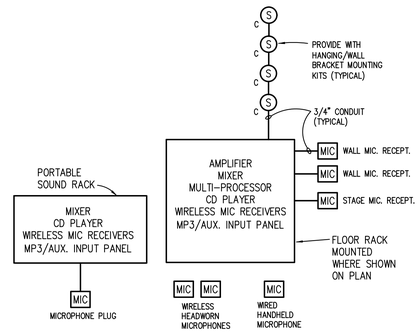

CAFETERIA SOUND SYSTEM DETAIL

NO SCALE

NOTE:
PROVIDE ALL CABLING PER MANUFACTURERS RECOMMENDATIONS. EQUIPMENT TO BE FURNISHED AND INSTALLED BY SOUNDCOM, HORIZON COMMUNICATIONS, OR OTHER QUALIFIED SOUND SYSTEM PROVIDER (AS SUB-CONTRACTOR TO THE E.C.).
PROVIDE ALL MISC WIRE/CABLING CONNECTORS AND BRACKETS FOR A COMPLETE SYSTEM. TEST AND TUNE SYSTEM. PROVIDE OWNER TRAINING. ENTIRE SYSTEM SHALL BE WARRANTIED FOR FOR 1 YEARS FROM DATE OF ACCEPTANCE.

EQUIPMENT LIST

(MISC. EQUIPMENT)
3 JBL AMS215/95 SPEAKERS
3 HANGING/WALL BRACKETS (PROVIDE SUPPORT AS REQUIRED)
2 WALL MOUNTED MICROPHONE OUTLETS WITH MICROPHONE JACKS
1 SHURE SM58S MICROPHONE WITH 25' CABLE

(FLOOR RACK)
2 CROWN CDI-1000 AMPLIFIERS
1 SHURE SCM268 MIXER
1 DBX 220I DRIVERACK FEEDBACK SUPPRESSOR (MULTI-PROCESSOR)
1 LOWELL LER-2422 LOCKING FLOOR CABINET (SIZED TO HOUSE EQUIPMENT NEEDED) WITH TWO RACK SPACE LOCKABLE DRAWER, PLUG STRIP AND FRONT DOOR

(PORTABLE RACK)
1 MACKIE 1604VLZ4 MIXING BOARD
1 DENNON DN-C615 CD PLAYER
2 AKG WMS470 WIRELESS HANDHELD MICROPHONE AND ALL COMPONENTS OR EQUAL
1 AKG WMS470 WIRELESS PRESENTER HEADWORN MIRCOPHONE AND ALL COMPONENTS OR EQUAL
1 PROCO IRACK MP3/AUX. INPUT PANEL
1 LOWELL PORTABLE RACK (SIZED TO HOUSE EQUIPMENT NEEDED) WITH CASTERS, TWO RACK SPACE LOCKABLE DRAWER AND PLUG STRIP, SYSTEM SHALL BE CAPABLE OF PROVIDING MUSIC FROM CD PLAYER, TUNER AND MAKE ANNOUNCEMENTS FROM WIRELESS MICROPHONES AND WIRED MICROPHONES BY PLUGGING INTO ANY MICROPHONE JACK

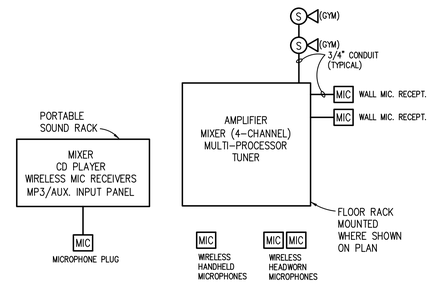

GYMNASIUM SOUND SYSTEM DETAIL

NO SCALE

NOTE:
PROVIDE ALL CABLING PER MANUFACTURERS RECOMMENDATIONS. EQUIPMENT TO BE FURNISHED AND INSTALLED BY SOUNDCOM, HORIZON COMMUNICATIONS, OR OTHER QUALIFIED SOUND SYSTEM PROVIDER (AS SUB-CONTRACTOR TO THE E.C.).
PROVIDE ALL MISC WIRE/CABLING CONNECTORS AND BRACKETS FOR A COMPLETE SYSTEM. TEST AND TUNE SYSTEM. PROVIDE OWNER TRAINING. ENTIRE SYSTEM SHALL BE WARRANTIED FOR FOR 1 YEARS FROM DATE OF ACCEPTANCE.

EQUIPMENT LIST

(MISC. EQUIPMENT)
2 EV SX300PIX SPEAKERS
2 HANGING/WALL BRACKETS (PROVIDE SUPPORT AS REQUIRED)
2 WALL MOUNTED MICROPHONE OUTLETS WITH MICROPHONE JACKS
1 SHURE SM58S MICROPHONE WITH 25' CABLE
1 ATLASOUND FLOOR STAND MS12CE

(FLOOR RACK)
1 CROWN CDI-1000 AMPLIFIERS
1 SHURE SCM268 MIXER
1 DBX 220I DRIVERACK FEEDBACK SUPPRESSOR (MULTI-PROCESSOR)
1 LOWELL LER-2422 LOCKING FLOOR CABINET (SIZED TO HOUSE EQUIPMENT NEEDED) WITH TWO RACK SPACE LOCKABLE DRAWER, PLUG STRIP AND FRONT DOOR

(PORTABLE RACK)
1 MACKIE 1604VLZ4 MIXING BOARD
1 DENNON DN-C615 CD PLAYER
1 AKG WMS470 WIRELESS HANDHELD MICROPHONE AND ALL COMPONENTS OR EQUAL
2 AKG WMS470 WIRELESS PRESENTER HEADWORN MIRCOPHONE AND ALL COMPONENTS OR EQUAL
1 PROCO IRACK MP3/AUX. INPUT PANEL
1 LOWELL PORTABLE RACK (SIZED TO HOUSE EQUIPMENT NEEDED) WITH CASTERS, TWO RACK SPACE LOCKABLE DRAWER AND PLUG STRIP, SYSTEM SHALL BE CAPABLE OF PROVIDING MUSIC FROM CD PLAYER, TUNER AND MAKE ANNOUNCEMENTS FROM WIRELESS MICROPHONES AND WIRED MICROPHONES BY PLUGGING INTO ANY MICROPHONE JACK

WA
WAKELY ASSOCIATES, INC.
ARCHITECTS & ENGINEERS
30500 VAN DYKE AVE.
SUITE M-7
WARREN, MICHIGAN, 48093
TEL. 586-573-4100
FAX. 586-573-0822
E-MAIL: WA@WAKELYAIA.COM

Peter Basso Associates Inc
CONSULTING ENGINEERS
5145 Livernois, Suite 100
Troy, Michigan 48098-3276
Tel: 248-879-5668
Fax: 248-879-0007
www.PeterBassoAssociates.com
PBA Project No.: 2015-0144

FARMINGTON PUBLIC SCHOOLS - 2015 BOND
2018 PROJECTS
KENBROOK & BEECHVIEW ELEMENTARY SCHOOLS

KENBROOK ELEMENTARY SCHOOL

ELECTRICAL DETAILS AND DIAGRAMS

PRELIMINARY ☐
DESIGN DEVELOPMENT ☐
CONSTRUCTION ■
FINAL RECORD ☐

DRAWN BY: JRD
CHECKED BY: GJZ

REVISIONS:

DATE: 12-15-17

SHEET NO.:

E7.1KB

JOB NO.: 171712A

g:\2015\2015-0144-00\Cad\kenbrook es\2015-0144-E7-DT.dwg, E7.1KB, 12/12/2017 2:25:44 PM, Suha A. Matti, _Default.pc3 .0.09699, Peter Basso Associates Inc.

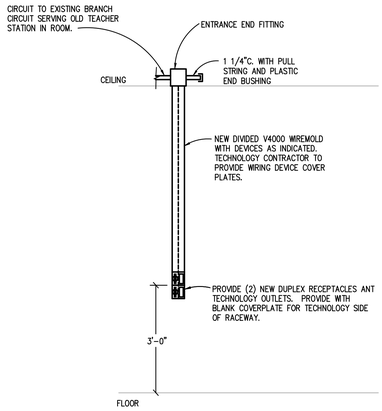

TEACHER STATION RACEWAY DETAIL

NO SCALE

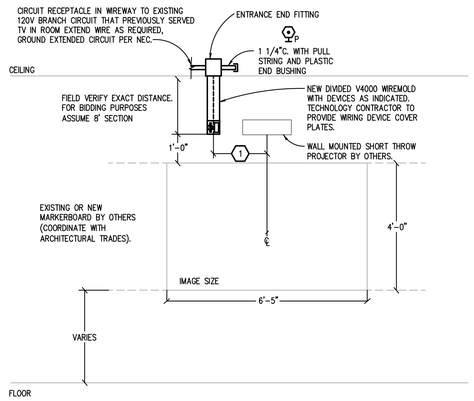

SHORT THROW PROJECTOR POWER/DATA MOUNTING DETAIL

NO SCALE

NOTES:

1. MOUNT RACEWAY AT 15" TO THE LEFT OR RIGHT OF CENTERLINE OF MARKERBOARD. ADJUST SIDE AS REQUIRED FOR CLOCKS, PA SPEAKERS, OR OTHER OBSTRUCTIONS. COORDINATE EXACT LOCATION IN FIELD WITH EXISTING CONDITIONS AND TECHNOLOGY CONTRACTOR. MINIMUM DISTANCE FROM OBSTRUCTION IS 21".

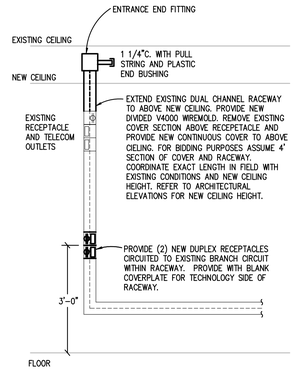

TEACHER STATION RACEWAY EXTENSION DETAIL

NO SCALE

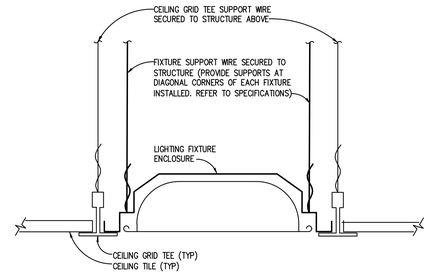

RECESSED LIGHTING FIXTURE INSTALLATION DETAIL

NO SCALE

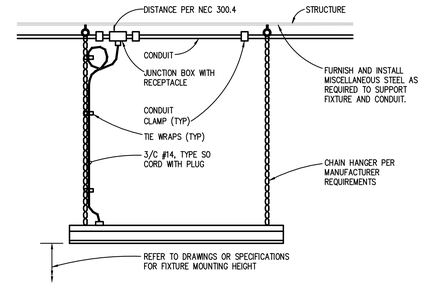

TYPICAL MOUNTING DETAIL FOR CHAIN HUNG LIGHTING FIXTURES

NO SCALE

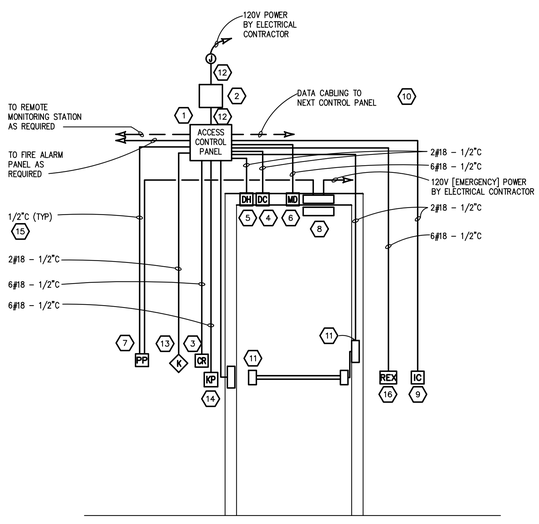

TYPICAL ACCESS CONTROL SINGLE DOOR CONNECTION DIAGRAM

NO SCALE

GENERAL NOTES:

1. REFER TO ELECTRICAL FLOOR PLANS FOR INDIVIDUAL DOOR REQUIREMENTS AND DEVICE LOCATIONS.
2. ELECTRICAL CONTRACTOR SHALL PROVIDE BACK BOXES, CONDUIT, AND 120 VOLT WIRING AND TERMINATIONS. ACCESS CONTROL CONTRACTOR SHALL PROVIDE EQUIPMENT DEVICES AND ALL LOW VOLTAGE WIRING AND TERMINATIONS. WIRE SIZES AND QUANTITIES ARE TYPICAL ONLY, PROVIDE WIRING AS REQUIRED BY MANUFACTURER.
3. REFER TO DOOR HARDWARE AND DOOR SCHEDULE AND COORDINATE ALL WORK WITH HARDWARE CONTRACTOR .
4. ELECTRICAL CONTRACTOR SHALL PROVIDE INTERCONNECTION WITH FIRE ALARM PANEL TO RELEASE DOORS I.E. ELECTROMAGNETIC LOCKS UPON AN ALARM CONDITION, AS REQUIRED.

(#) KEYED NOTES:

1. ACCESS CONTROL SYSTEM, DOOR PANEL. PROVIDE A 2-8 DOOR TYPE AS SPECIFIED, AND AS REQUIRED.
2. DOOR CONTROLLER POWER SUPPLY. PROVIDE AS SPECIFIED.
3. PROXIMITY CARD READER. PROVIDE AS SPECIFIED.
4. DOOR MONITOR CONTACT SWITCH: PROVIDE SWITCH, MOUNTED IN DOOR AND FRAME. [PROVIDED BY HARDWARE CONTRACTOR] PROVIDE INTERCONNECTION WIRING AND CONDUIT AS REQUIRED.
5. DOOR HOLDER: ELECTROMAGNETIC SWITCH MOUNTED ON/IN DOOR AND FRAME. [FOR DELAYED OPERATION] IN LIEU OF ELECTRIC STRIKE.
6. MOTION DETECTOR: REQUEST TO EXIT MOTION DETECTOR MOUNTED TO TOP OF DOOR FRAME. COORDINATE WITH DOOR AND FRAME CONTRACTOR.
7. DOOR OPERATOR PUSH PLATE: PROVIDED BY OTHERS, PROVIDE INTERCONNECTION WIRING AND CONDUIT AS REQUIRED.
8. DOOR OPERATOR: PROVIDED BY HARDWARE CONTRACTOR. COORDINATE POWER REQUIREMENTS WIRING AND CONDUIT AS REQUIRED.
9. INTERCOM STATION: PROVIDE INTERCONNECTION FROM MASTER STATION TO [TWO] REMOTE STATIONS FOR MANUAL RELEASE OF DOOR STRIKE.
10. CABLING: PROVIDE ALL CABLING BETWEEN DOORS, DEVICES AND CONTROL PANEL AND BETWEEN REMOTE MONITORING STATION AS REQUIRED PER MANUFACTURERS RECOMMENDATION. ROUTE AND SUPPORT PER TELECOMMUNICATIONS CABLING.
11. ELECTRIC STRIKE, PANIC HARDWARE, POWER TRANSFER: PROVIDED BY HARDWARE CONTRACTOR. COORDINATE POWER REQUIREMENTS AND WIRING CONNECTIONS. PROVIDE WIRING AND CONDUIT AS REQUIRED.
12. PROVIDE ALL LOW VOLTAGE WIRING AND CONDUIT AS REQUIRED.
13. KEY-SWITCH: PROVIDE SWITCH TO ALLOW DELAYED OPERATION OVERRIDE.
14. KEYPAD: PROVIDE AS SPECIFIED. [IN LIEU OF CARD READER]
15. WIRING PROVIDED BY PUSH PLATE INSTALLER. PROVIDE TERMINATIONS, AS REQUIRED.
16. REQUEST TO EXIT (REX) PUSH PAD: PROVIDE ON "INTERIOR", NON-SECURED SIDE. [IN LIEU OF MOTION DETECTOR TYPE] PROVIDE DEVICE AND ALL INTERCONNECTION WIRING AND CONDUIT AS REQUIRED.

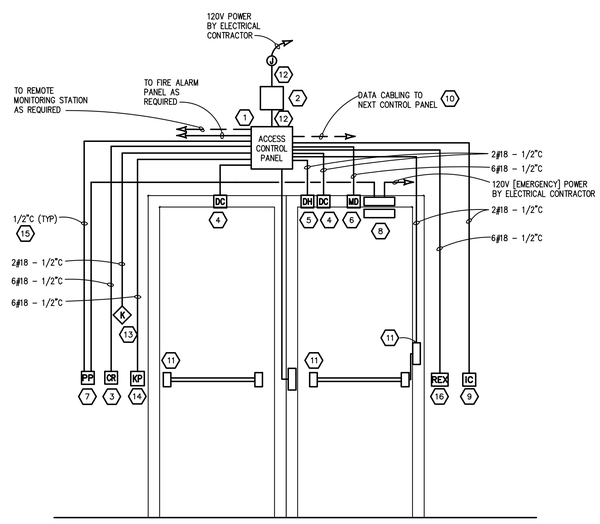

TYPICAL ACCESS CONTROL DOUBLE DOOR CONNECTION DIAGRAM

NO SCALE

GENERAL NOTES:

1. REFER TO ELECTRICAL FLOOR PLANS FOR INDIVIDUAL DOOR REQUIREMENTS AND DEVICE LOCATIONS.
2. ELECTRICAL CONTRACTOR SHALL PROVIDE BACK BOXES, CONDUIT, AND 120 VOLT WIRING AND TERMINATIONS. ACCESS CONTROL CONTRACTOR SHALL PROVIDE EQUIPMENT DEVICES AND ALL LOW VOLTAGE WIRING AND TERMINATIONS. WIRE SIZES AND QUANTITIES ARE TYPICAL ONLY, PROVIDE WIRING AS REQUIRED BY MANUFACTURER.
3. REFER TO DOOR HARDWARE AND DOOR SCHEDULE AND COORDINATE ALL WORK WITH HARDWARE CONTRACTOR .
4. ELECTRICAL CONTRACTOR SHALL PROVIDE INTERCONNECTION WITH FIRE ALARM PANEL TO RELEASE DOORS I.E. ELECTROMAGNETIC LOCKS UPON AN ALARM CONDITION, AS REQUIRED.

(#) KEYED NOTES:

1. ACCESS CONTROL SYSTEM, DOOR PANEL. PROVIDE A 2-8 DOOR TYPE AS SPECIFIED, AND AS REQUIRED.
2. DOOR CONTROLLER POWER SUPPLY. PROVIDE AS SPECIFIED.
3. PROXIMITY CARD READER. PROVIDE AS SPECIFIED.
4. DOOR MONITOR CONTACT SWITCH: PROVIDE SWITCH, MOUNTED IN DOOR AND FRAME. [PROVIDED BY HARDWARE CONTRACTOR] PROVIDE INTERCONNECTION WIRING AND CONDUIT AS REQUIRED.
5. DOOR HOLDER: ELECTROMAGNETIC SWITCH MOUNTED ON/IN DOOR AND FRAME. [FOR DELAYED OPERATION] IN LIEU OF ELECTRIC STRIKE.
6. MOTION DETECTOR: REQUEST TO EXIT MOTION DETECTOR MOUNTED TO TOP OF DOOR FRAME. COORDINATE WITH DOOR AND FRAME CONTRACTOR.
7. DOOR OPERATOR PUSH PLATE: PROVIDED BY OTHERS, PROVIDE INTERCONNECTION WIRING AND CONDUIT AS REQUIRED.
8. DOOR OPERATOR: PROVIDED BY HARDWARE CONTRACTOR. COORDINATE POWER REQUIREMENTS WIRING AND CONDUIT AS REQUIRED.
9. INTERCOM STATION: PROVIDE INTERCONNECTION FROM MASTER STATION TO [TWO] REMOTE STATIONS FOR MANUAL RELEASE OF DOOR STRIKE.
10. CABLING: PROVIDE ALL CABLING BETWEEN DOORS, DEVICES AND CONTROL PANEL AND BETWEEN REMOTE MONITORING STATION AS REQUIRED PER MANUFACTURERS RECOMMENDATION. ROUTE AND SUPPORT PER TELECOMMUNICATIONS CABLING.
11. ELECTRIC STRIKE, PANIC HARDWARE, POWER TRANSFER: PROVIDED BY HARDWARE CONTRACTOR. COORDINATE POWER REQUIREMENTS AND WIRING CONNECTIONS. PROVIDE WIRING AND CONDUIT AS REQUIRED.
12. PROVIDE ALL LOW VOLTAGE WIRING AND CONDUIT AS REQUIRED.
13. KEY-SWITCH: PROVIDE SWITCH TO ALLOW DELAYED OPERATION OVERRIDE.
14. KEYPAD: PROVIDE AS SPECIFIED. [IN LIEU OF CARD READER]
15. WIRING PROVIDED BY PUSH PLATE INSTALLER. PROVIDE TERMINATIONS, AS REQUIRED.
16. REQUEST TO EXIT (REX) PUSH PAD: PROVIDE ON "INTERIOR", NON-SECURED SIDE. [IN LIEU OF MOTION DETECTOR TYPE] PROVIDE DEVICE AND ALL INTERCONNECTION WIRING AND CONDUIT AS REQUIRED.

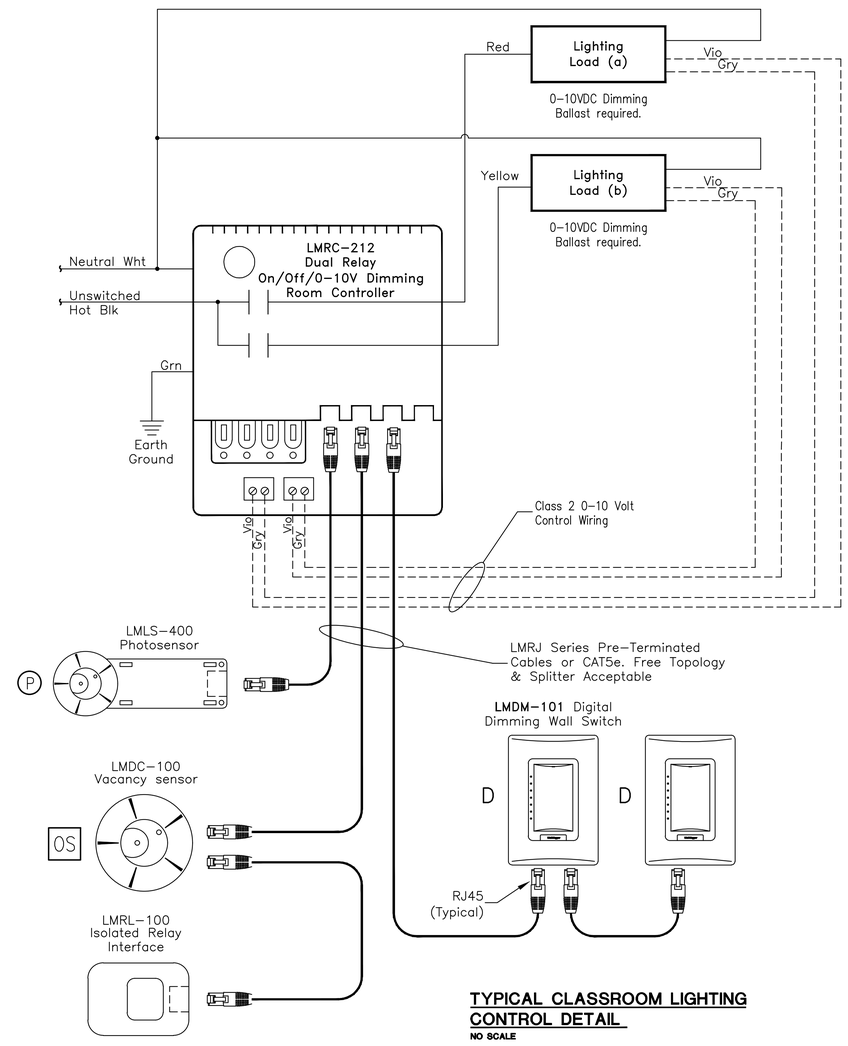

TYPICAL CLASSROOM LIGHTING CONTROL DETAIL

NO SCALE

NOTES:

1. ROOM CONTROLLERS SHALL BE LOCATED ON CORRIDOR WALL ABOVE CEILING AND LOCATED NEAR THE DOOR INTO EACH ROOM THE CONTROLLER IS SERVING.
2. BASIS OF DESIGN MODEL NUMBERS ARE BASED UPON WATTSTOPPER (CONTACT GARY WRIGHT AT E.M.I. 586-484-1275). OTHER ACCEPTABLE MANUFACUTERS ARE LEVITON, SENSORSWITCH, AND GREENGATE.
3. PROGRAM LIGHTING ZONES AS INDICATED ON DRAWINGS.

WA

WAKELY ASSOCIATES, INC.
ARCHITECTS & ENGINEERS

30500 VAN DYKE AVE.
SUITE M-7
WARREN, MICHIGAN, 48093

TEL. 586-573-4100
FAX. 586-573-0822
E-MAIL: WA@WAKELYAIA.COM

Peter Basso Associates Inc
CONSULTING ENGINEERS
5145 Livernois, Suite 100
Troy, Michigan 48098-3276
Tel: 248-879-5668
Fax: 248-879-0007
www.PeterBassoAssociates.com
PBA Project No.: 2015-0144

FARMINGTON PUBLIC SCHOOLS - 2015 BOND
2018 PROJECTS
KENBROOK & BEECHVIEW ELEMENTARY SCHOOLS

KENBROOK ELEMENTARY SCHOOL

ELECTRICAL DETAILS AND DIAGRAMS

PRELIMINARY ☐
DESIGN DEVELOPMENT ☐
CONSTRUCTION ■
FINAL RECORD ☐

DRAWN BY: JRD
CHECKED BY: GJZ

REVISIONS:

DATE: 12-15-17

SHEET NO.: E7.2KB

JOB NO.: 171712A

g:\2015\2015-0144-00\Cad\kenbrook es\2015-0144-E7-DT.dwg, E7.2KB, 12/12/2017 2:25:46 PM, Suha A. Matti, _Default.pc3 ,0.09699, Peter Basso Associates Inc.