ADDENDUM No. 1

Project Name:	Owner: Charter Township of Canton Project Name: Canton Public Safety Building Renovations	**Addendum No:** One (1)
Project Number:	21-130	Issue Date: March 18, 2022
Project Location:	1150 South Canton Center Road, Canton Twp, MI 48188	

This Addendum forms a part of the above described Contract Documents and supersedes, supplements or clarifies parts thereof to the extent defined by the terms set forth in this Addendum.

This Addendum consists of (3) typed pages and the following (19) attachments:

Specification Sections: 000100, 033543, 095123, 098433.11, 101419, and 123661.16.
Drawings: **Architectural:** A0-04, A0-08, A1-02, A3-10, A6-11, A8-01, A8-02, A8-10 and A9-01.
Mechanical: M5.1, M6.7, M7.4 and M7.8.
Electrical: E3.1, E3.2, E5.2, E6.1, and E6.2.
Technology: T1-01.

SPECIFICATIONS:

ITEM S1 000100 Table of Contents (Revised and Re-Issued).
A. Added Section 033543 – Polished Concrete.
B. Deleted Section – Solid Surfacing Windowsills.
C. Deleted section 112419 under Division 14.

ITEM S2 033543 Polished Concrete (Issued)
A. Add section.

ITEM S3 095123 Acoustical Tile Ceilings (Revised But Not Re-Issued)
A. Changed the color of the grid under paragraph 2.5 C from white to “Black”.

ITEM S4 098433.11 Sound Absorbing Wall Panels (Revised But Not Re-Issued)
A. Changed information on size of panel in paragraph 2.02 A, item #2 from “As indicated on drawings” to “As recommended by manufacturer.”

ITEM S5 101419 Dimensional Letter Signage (Revised and Re-Issued)
A. Eliminated item ‘A’ in paragraph 2.2, referencing cast dimensional characters.

ITEM S6 123661.16 Solid Surfacing Windowsills (Delete)
A. Delete section completely.

ARCHITECTURAL DRAWINGS:

ITEM A1 A0-04 Room Finish Schedule (Revised and Re-Issued)
A. Add new floor and wall finishes for Ordnance Officers 228.
B. Delete new ACT-1 ceilings from rooms as highlighted.
C. Add PNT-1 finish for spaces 152 and 153 in lieu of ACT-1.
D. Added note 2 indicating replace removed gyp ceilings with new to match existing including all security reinforcement provisions as required.
E. Added note 3 indicating all rooms to receive new window shades.

ITEM A2 A0-08 Phasing Plan (Issued)
A. Proposed Construction Phasing and Sequence of Construction Diagrams for the first and second floors.

ITEM A3 A1-01 Demolition First Floor Plan (Revised but Not Re-Issued)
A. Eliminated keynote No. 35 regarding the temporary access enclosure in the existing lobby and removed the dashed lines the defined it on the plan.

ITEM A4 A1-02 Demolition Second Floor Plan (Revised But Not Re-Issued)
B. Added key note 21 indicating remove carpet and wall base in room 228 Ordnance Officers.

ITEM A5 A3-10 Plan Details (Revised & Re-Issued)
A. Added notes and graphics to details 2, 3 and 5 indicating solid surface sills SS-1.

ITEM A6 A6-11 Section Details and Interior Elevations (Revised & Re-Issued)
A. Added dimensions to interior elevations of Interview Rooms 106 and 107 to define limits of acoustic wall treatment.
B. Revise note SST Handrail in elevations 4, 5 and 8 to be steel. Provide painted finish.

ITEM A7 A8-01 Interior Elevations (Revised & Re-Issued)
A. Added vertical dimensions for base, openings and ceiling to elevations 1, 2, 3, 4 and 6 to clarify phenolic panel heights.
B. Added notes to clarify extents of solid surface counter tops, phenolic wall panels and painted gyp bd.
C. Added ceiling soffit graphics to elevation 6.
D. Added graphics and layout for wall mounted aluminum signage in elevations 2 and 6.

ITEM A8 A8-02 Interior Elevations (Revised & Re-Issued)
A. Added vertical dimensions for base, openings and ceiling to elevations 1, 3 and 4 to clarify acoustic panel heights.
B. Add solid surface countertops SS-3 to elevation 13 and 17 in lieu of plastic laminate PL-2.

ITEM A9 A8-10 Millwork Details (Revised & Re-Issued)
A. Added solid surface lavatory counter SS-3 in lieu of plastic laminate in Typical Vanity Section Detail 5.

ITEM A10 A9-01 Partial & Enlarged First Floor Finish Plans (Revised But Not Re-Issued)
A. Revise floor finish note 'Ex Conc' to be 'Exist' at door openings into holding cells and adjacent corridors.

MECHANICAL DRAWINGS:

ITEM M1 M5.1 Mechanical Enlarged Plan (Revised & Re-Issued)
A. Revised equipment sizing and ductwork connections to HVAC-1, HVAC-2, and HVAC-3.

ITEM M2 M6.7 AHU Details (Revised & Re-Issued)
A. Revised equipment section and plan views for HVAC-1, HVAC-2, and HVAC-3.

ITEM M1 M7.4 Mechanical Schedules (Revised & Re-Issued)
A. Revised equipment schedules for HVAC-1, HVAC-2, and HVAC-3.
B. Revised Key Note #2 on Modular Air Handling Unit Component Schedule.

ITEM M2 M7.8 Mechanical Schedules (Revised & Re-Issued)
A. Revised ET-1 in the Expansion Tank Schedule.

ELECTRICAL DRAWINGS

ITEM E1 E3.1 First Floor Power Plan (Revised & Re-Issued)

A. Relocated new panel LP-F to west wall of Records/Clerk 114.
B. Added receptacle and branch circuit for central vacuum system power in Central Vacuum 117.
C. Revised TV monitor outlets mounting heights and notes in Dispatch 118.
D. Relocated Existing Snow Melt System controller from Dispatch 118 to Mech Rm 124. Adjusted existing transformer location in Mech Rm 124 on plan for clarity.
E. Deleted branch circuit for HVAC-3 receptacle and control.
F. Clarified HVAC-1 circuiting notation for LPB-19.

ITEM E2 E3.2 Second Floor Power Plan (Revised & Re-Issued)

A. Added branch circuit for HVAC-2 receptacle and lighting.

ITEM E3 E5.2 One Line Diagram (Revised & Re-Issued)

A. Revised new power for new SF-1 and new RF-1 at existing PP-B.
B. Revised new power for new SF-2 at existing PP-C.
C. Revised Load Summary.

ITEM E4 E6.1 Panel Schedules (Revised & Re-Issued)

A. Revised panel schedules (Replacement/New) LP-AA and (Revised) LP-B.

ITEM E5 E6.2 Panel Schedules (Revised & Re-Issued)

A. Revised panel schedules (Replacement/New) LP-C and (Replacement/New) LP-F.

TECHNOLOGY DRAWINGS

ITEM T1 T1-01 First Floor Plan Technology (Revised & But Not Re-Issued)

A. Relocated data drop along west wall of office 109 approx. 2 feet north of previous location.

****END OF ADDENDUM #1****

Division	Section Title	Pages
	COVER	1
	TABLE OF CONTENTS	4
000000	PROJECT IDENTIFICATION	1
	ADVERTISEMENT FOR BID	1
000100	CANTON GENERAL REQUIREMENTS	4
	CANTON BACKGROUND AUTHORIZATION REQUEST FOR CONTRACTORS	1
000200	MATERIAL FINISH / COLORS SCHEDULE	6
AIA A701	INSTRUCTIONS TO BIDDERS	8
AIA D401	CERTIFICATE OF AUTHENTICITY – (A701)	1
002213	SUPPLEMENTARY INSTRUCTIONS TO BIDDERS	5
003000	REQUIRED BID SUBMISSION MATERIALS	1
003100	BID FORM	3
003111	GENERAL CONTRACTOR'S QUALIFICATION STATEMENT	3
AIA A305	CONTRACTOR'S QUALIFICATION STATEMENT	3
AIA A305	EXHIBIT A GENERAL INFORMATION	4
AIA A305	EXHIBIT B FINANCIAL AND PERFORMANCE INFORMATION	3
AIA A305	EXHIBIT C PROJECT SPECIFIC INFORMATION	4
AIA A305	EXHIBIT D CONTRACTOR'S PAST PROJECT EXPERIENCE	1
AIA A305	EXHIBIT E CONTRACTOR'S PAST PROJECT EXPERIENCE, CONTINUED	1
004313	BID SECURITY FORMS	1
004373	PROPOSED SCHEDULE OF VALUES FORM	1
006000	PROJECT FORMS	1
A201	GENERAL CONDITIONS OF THE CONTRACT FOR CONSTRUCTION	40
AIA D401	CERTIFICATE OF AUTHENTICITY – (A201)	1
008000	SUPPLEMENTARY CONDITIONS	8

DIVISION 1 - GENERAL REQUIREMENTS

011000	SUMMARY	4
012100	ALLOWANCE	2
012200	UNIT PRICES	2
012500	SUBSTITUTION PROCEDURES	3
012600	CONTRACT MODIFICATION PROCEDURES	2
012900	PAYMENT PROCEDURES	4
013100	PROJECT MANAGEMENT AND COORDINATION	7
013200	CONSTRUCTION PROGRESS DOCUMENTATION	5
013300	SUBMITTAL PROCEDURES	8
014000	QUALITY REQUIREMENTS	7
014200	REFERENCES	8
015000	TEMPORARY FACILITIES AND CONTROLS	8
016000	PRODUCT REQUIREMENTS	5
017300	EXECUTION	7
017700	CLOSEOUT PROCEDURES	6
017823	OPERATION AND MAINTENANCE DATA	7
017839	PROJECT RECORD DOCUMENTS	3
017900	DEMONSTRATION AND TRAINING	5

DIVISION 2 - EXISTING CONDITIONS (NOT USED)

DIVISION 3 - CONCRETE
033000.....CAST-IN-PLACE CONCRETE 17
033543.....POLISHED CONCRETE..... 4

DIVISION 4 - MASONRY
042000.....UNIT MASONRY 9

DIVISION 5 - METALS
055000.....METAL FABRICATIONS 4
055213.....PIPE AND TUBE RAILING 4

DIVISION 6 - WOODS, PLASTICS AND COMPOSITES
061000.....ROUGH CARPENTRY 5

DIVISION 7 - THERMAL AND MOISTURE PROTECTION
072100.....THERMAL INSULATION 3
075419.....POLYVINYL-CHLORIDE (PVC) ROOFING (REPAIR & PATCHING) 6
078413.....PENETRATION FIRESTOPPING 4
078446.....FIRE-RESISTIVE JOINT SYSTEMS 4
079200.....JOINT SEALANTS 7

DIVISION 8 – OPENINGS
081213.....HOLLOW METAL FRAMES 6
081416.....FLUSH WOOD DOORS 4
087100.....DOOR HARDWARE 15
088000.....GLAZING 6
088856.....BALLISTIC RESISTANT GLAZING 5

DIVISION 9 - FINISHES
092216.....NON-LOAD-BEARING STEEL FRAMING 6
092900.....GYPSUM BOARD 5
093013.....CERAMIC TILING 7
095123.....ACOUSTICAL TILE CEILINGS 4
096513.....RESILIENT BASE AND ACCESSORIES 5
096516.....RESILIENT SHEET FLOORING 4
096519.....RESILIENT TILE FLOORING 4
096536.....STATIC CONTROL RESILIENT FLOORING 5
096813.....TILE CARPETING 6
096933.....LOW PROFILE FIXED HEIGHT ACCESS FLOORING 7
097823.....INTERIOR PHENOLIC WALL PANELS 5
098433.11....SOUND ABSORBING WALL PANELS 3
099123.....INTERIOR PAINTING 6

DIVISION 10 - SPECIALTIES
101419.....DIMENSIONAL LETTER SIGNAGE 5
102113.17....PHENOLIC-CORE TOILET COMPARTMENTS 3
102600.....WALL AND DOOR PROTECTION 3
102800.....TOILET AND BATH ACCESSORIES 3
104413.....FIRE EXTINGUISHER CABINETS 3
104416.....FIRE EXTINGUISHERS 2
105113.....METAL LOCKERS 4

DIVISION 11 – EQUIPMENT
112419 .....VACUUM CLEANING SYSTEM 4

DIVISION 12 - FURNISHINGS
122413 .....ROLLER SHADES 4
123216 .....MANUFACTURED CASEWORK 8
123623.13 ....PLASTIC-LAMINATE-CLAD COUNTERTOPS 3
123661.19 ....QUARTZ AGGLOMERATE COUNTERTOPS 3

DIVISION 13 – SPECIAL CONSTRUCTION (NOT APPLICABLE)

DIVISION 14 – CONVEYING SYSTEMS (NOT APPLICABLE)

DIVISION 15 – 19 (NOT APPLICABLE)

DIVISION 20 – MECHANICAL GENERAL REQUIREMENTS
200500 .....MECHANICAL GENERAL REQUIREMENTS 12
200510 .....BASIC MECHANICAL MATERIALS AND METHODS 20
200513 .....MOTORS 8
200516 .....PIPE FLEXIBLE CONNECTORS, EXPANSION FITTINGS AND LOOPS 4
200519 .....METERS AND GAGES 6
200529 .....HANGERS AND SUPPORTS 14
200547 .....MECHANICAL VIBRATION CONTROLS 8
200553 .....MECHANICAL IDENTIFICATION 6
200700 .....MECHANICAL INSULATION 18
202923 .....VARIABLE FREQUENCY CONTROLLERS 10

DIVISION 21 – FIRE SUPPRESSION
211100 .....FIRE SUPPRESSION SYSTEM 12
212212 .....CLEAN-AGENT EXTINGUISHING SYSTEMS (C6-FLOUROKETONE) 12

DIVISION 22 – PLUMBING
220523 .....GENERAL DUTY VALVES FOR PLUMBING 6
221116 .....DOMESTIC WATER PIPING 8
221119 .....DOMESTIC WATER PIPING SPECIALTIES 8
221316 .....SANITARY WASTE AND VENT PIPING 8
221319 .....DRAINAGE PIPING SPECIALTIES 10
224200 .....PLUMBING FIXTURES 16
224700 .....DRINKING FOUNTAINS, WATER COOLERS AND CUSPIDORS 6

DIVISION 23 –HEATING, VENTILATING AND AIR CONDITIONING (HVAC)
230130 .....HVAC AIR-DISTRIBUTION SYSTEM CLEANING 6
230500 .....COMMON WORK RESULTS FOR HVAC 6
230523 .....GENERAL DUTY VALVES FOR HVAC 6
230593 .....TESTING, ADJUSTING AND BALANCING 22
230933 .....TEMPERATURE CONTROLS 26
232113 .....HYDRONIC PIPING 14
232123 .....HYDRONIC PUMPS 8
232300 .....REFRIGERANT PIPING 8
232510 .....PIPING SYSTEMS FLUSHING AND CHEMICAL CLEANING 6

232513 .....WATER TREATMENT FOR CLOSED-LOOP HYDRONIC SYSTEMS 8
233113 .....METAL DUCTS 14
233119 .....HVAC CASINGS 6
233300 .....DUCT ACCESSORIES 14
233413 .....AXIAL FANS 6
233417 .....FANS ARRAYS 6
233423 .....POWER VENTILATORS 8
233600 .....AIR TERMINAL UNITS 6
233713 .....DIFFUSERS, REGISTERS, AND GRILLES 4
233723 .....AIR INTAKE AND RELIEF HOODS 6
234300 .....ELECTRONIC AIR CLEANERS 6
236433 .....MODULAR WATER CHILLERS 10
237413 .....MODULAR AND SEMI-CUSTOM CENTRAL-STATION AIR-HANDLING UNITS 10
238120 .....UNITARY ROOFTOP AIR CONDITIONERS 10
238121 .....COMMERCIAL ROOFTOP AIR CONDITIONERS 10
238126 .....SPLIT-SYSTEM AIR-CONDITIONING UNITS 6
238216 .....HEATING AND COOLING COILS 4
238229 .....ELECTRIC AND HYDRONIC RADIANT HEATING UNITS 6
238241 .....PROPELLER FAN UNIT HEATERS – HOT WATER 6
238413 .....HUMIDIFIERS 6

DIVISION 26 – ELECTRICAL
260010 .....ELECTRICAL GENERAL REQUIREMENTS 12
260519 .....CONDUCTORS AND CABLES 8
260526 .....GROUNDING AND BONDING 8
260529 .....HANGERS AND SUPPORTS FOR ELECTRICAL SYSTEMS 8
260533 .....RACEWAY AND BOXES 14
260553 .....ELECTRICAL IDENTIFICATION 6
260573 .....OVERCURRENT DEVICE COORDINATION STUDY-ARC FLASH HAZARD ANALYSIS 10
260923 .....LIGHTING CONTROL DEVICES 8
260943 .....LIGHTING CONTROL SYSTEMS 14
260999 .....ELECTRICAL TESTING 6
262416 .....PANELBOARDS 8
262726 .....WIRING DEVICES 10
262813 .....FUSES 4
262816 .....ENCLOSED SWITCHES AND CIRCUIT BREAKERS 8
262913 .....ENCLOSED CONTROLLERS 10
264113 .....LIGHTING PROTECTION 6
265119 .....LED INTERIOR LIGHTING 10
265700 .....LUMINAIRE PRODUCT DATA 200

DIVISION 27 – COMMUNICATIONS
270000 .....GENERAL TECHNOLOGY REQUIREMENTS 4
271000 .....STRUCTURED CABLING & COMMUNICATIONS EQUIPMENT ROOM FITTINGS 6

DIVISION 28 – ELECTRONIC SAFETY AND SECURITY
283500 .....REFRIGERANT MONITORING SYSTEM 8

END OF TABLE OF CONTENTS

SECTION 033543 - POLISHED CONCRETE FINISHING

PART 1 - GENERAL

1.1 SUMMARY

A. Section Includes:

1. Polished concrete finishing.

1.2 DEFINITIONS

A. Design Reference Sample: Sample designated by Architect in the Contract Documents that reflects acceptable surface quality and appearance of polished concrete.

1.3 PREINSTALLATION MEETINGS

A. Preinstallation Conference: Conduct conference at Project site.

1. Require representatives of each entity directly concerned with polished concrete to attend, including the following:

a. Contractor's superintendent.
b. Polished concrete finishing Subcontractor.
c. Owner.
d. Architect.

2. Review concrete finishing process and protection of polished concrete.

1.4 ACTION SUBMITTALS

A. Product Data: For each type of product.

B. Polishing Schedule: Submit plan showing polished concrete surfaces and schedule of polishing operations for each area of polished concrete before start of polishing operations.

1.5 INFORMATIONAL SUBMITTALS

A. Qualification Data: For Installer.

B. Material Certificates: For each of the following, signed by manufacturers:

1. Repair materials.
2. Liquid floor treatments.

1.6 QUALITY ASSURANCE

A. Mockups: Before proceeding to implement the work, construct a field mockup to verify selections made under Sample submittals and to demonstrate typical joints, surface finish, tolerances, and standard of workmanship. Build mockups to comply with the following requirements, using materials indicated for the completed Work:

1. Build mockups in the location and of the size indicated or, if not indicated, as directed by Architect.
2. Demonstrate curing, finishing, and protecting of polished concrete.

PART 2 - PRODUCTS

2.1 REPAIR MATERIALS

A. Polishable Grout Coating System: Fast setting, polymer-modified, high-strength cement with outstanding bonding properties formulated to fill in small cracks, pinholes and surface irregularities.

1. Basis-of-Design Product: Subject to compliance with requirements, provide AmeriPolish, PG-7K Grout Coating system or a comparable product by one of the following:

a. Americrete, Inc.
b. Artcrete, Inc.
c. ARDEX Americas.
d. Bomanite Co.
e. Butterfield Color, Inc.
f. EPMAR Corporation; a Quaker Houghton company.
g. H&C Decorative Concrete Products; a brand of Sherwin-Williams Co.
h. Scofield, a Business Unit of Sika Corporation.
i. Or other manufacturer – submit for pre-approval.

B. Polyurea Joint Filler: Two-component, semirigid, 100 percent solids, polyurea resin with a Type A Shore durometer hardness of at least 80 according to ASTM D2240.

1. Manufacturers: Subject to compliance with requirements, provide products by one of the following:

a. ARDEX Americas.
b. ASTC Polymers.
c. ChemCo Systems, Inc.
d. Euclid Chemical Company (The); an RPM company.
e. Kaufman Products, Inc.
f. Master Builders Solutions.
g. SpecChem, LLC.
h. US SPEC, Division of US MIX Company.

2.2 LIQUID FLOOR TREATMENTS

A. Penetrating Liquid Floor Densifier for Polished Concrete Finish: Clear, waterborne solution of inorganic silicate or siliconate materials and proprietary components; odorless; that penetrates, hardens, and is suitable for polished concrete surfaces.

1. Basis-of-Design Product: Subject to compliance with requirements, provide AmeriPolish; 3D HS or a comparable product by one of the following:

a. ARDEX Americas.
b. AWRC Corporation.
c. Euclid Chemical Company (The); an RPM company.
d. H&C Decorative Concrete Products; a brand of Sherwin-Williams Co.
e. Laticrete International, Inc.
f. MAPEI Corporation.
g. PROSOCO, Inc.
h. Or other manufacturer – submit for pre-approval.

B. Topical Sealer for Polished Concrete Finish: Breathable, semi-penetrating / semi-topical sealer that helps to protect surfaces against stains and etching. Topical sealer shall create a water-resistant barrier that prevents liquids from infiltrating the surface.

1. Basis-of-Design Product: Subject to compliance with requirements, provide AmeriPolish; 3D SP or a comparable product by one of the following:

a. ARDEX Americas.
b. AWRC Corporation.
c. Euclid Chemical Company (The); an RPM company.
d. H&C Decorative Concrete Products; a brand of Sherwin-Williams Co.
e. Laticrete International, Inc.
f. MAPEI Corporation.
g. PROSOCO, Inc.
h. Or other manufacturer – submit for pre-approval.

C. Stain Resistor for Polished Concrete Finish: Fully penetrating stain repellent specifically formulated to protect polished concrete from oil and water-based stains.

1. Basis-of-Design Product: Subject to compliance with requirements, provide AmeriPolish; SR2 Plus Fully Penetrating Stain Resistor or a comparable product by one of the following:

a. ARDEX Americas.
b. AWRC Corporation.
c. Euclid Chemical Company (The); an RPM company.
d. H&C Decorative Concrete Products; a brand of Sherwin-Williams Co.
e. Laticrete International, Inc.
f. MAPEI Corporation.
g. PROSOCO, Inc.
h. Or other manufacturer – submit for pre-approval.

PART 3 - EXECUTION

3.1 POLISHING

A. Polish: Level 3: High sheen, 800 grit.

B. Apply polished concrete finish system to cured and prepared slabs to match accepted mockup.

1. Machine grind floor surfaces to receive polished finishes level and smoothness.
2. Apply polishable grout coating system after rough grind has been completed (installer to determine appropriate application time, but should be after 50 grit grind).
3. Grind and polish to a 200-grit level.
4. Apply penetrating liquid floor densifier for polished concrete in polishing sequence and according to manufacturer's written instructions, allowing recommended drying time between successive coats.
5. Grind and polish to a 400-grit level.
6. Apply 2nd coat of penetrating liquid floor densifier for polished concrete in polishing sequence and according to manufacturer's written instructions, allowing recommended drying time between successive coats.
7. Continue polishing with progressively finer-grit diamond polishing pads to gloss level, to match approved mockup.
8. Apply topical sealer and stain protector in accordance with manufacturer's written instructions, allowing recommended drying time between successive coats.
9. Control and dispose of waste products produced by grinding and polishing operations.
10. Neutralize and clean polished floor surfaces.

END OF SECTION 033543

SECTION 101419 - DIMENSIONAL LETTER SIGNAGE

PART 1 - GENERAL

1.1 SUMMARY

A. Section Includes:

1. Cutout dimensional characters.

1.2 ACTION SUBMITTALS

A. Product Data: For each type of product.

B. Shop Drawings: For dimensional letter signs.

1. Include fabrication and installation details and attachments to other work.
2. Show sign mounting heights, locations of supplementary supports to be provided by others, and accessories.
3. Show message list, typestyles, graphic elements, and layout for each sign.
4. Show locations of electrical service connections.
5. Include diagrams for power, signal, and control wiring.

C. Samples: For each dimensional character type and for each color and texture specified.

D. Sign Schedule: Use same designations specified or indicated on Drawings or in a sign schedule.

1.3 INFORMATIONAL SUBMITTALS

A. Sample warranty.

1.4 CLOSEOUT SUBMITTALS

A. Maintenance data.

1.5 WARRANTY

A. Special Warranty: Manufacturer agrees to repair or replace components of signs that fail in materials or workmanship within specified warranty period.

1. Warranty Period: Five (5) years from date of Substantial Completion.

PART 2 - PRODUCTS

2.1 PERFORMANCE REQUIREMENTS

A. Thermal Movements: For exterior signage, allow for thermal movements from ambient and surface temperature changes.

1. Temperature Change: 120 deg F, ambient; 180 deg F, material surfaces.

B. Electrical Components, Devices, and Accessories: Listed and labeled as defined in NFPA 70, by a qualified testing agency, and marked for intended location and application.

2.2 DIMENSIONAL CHARACTERS

A. Cutout (Flat-Cut) Characters: Characters with uniform faces; square-cut, smooth edges; precisely formed lines and profiles; and as follows:

1. Basis-of-Design Product: Subject to compliance with requirements, provide Gemini Incorporated; Flat Cut Metal or a comparable product by one of the following:

a. ACE Sign Systems, Inc.
b. Advance Corporation; Braille-Tac Division.
c. ASI-Modulex, Inc.
d. Grimco, Inc.
e. Innerface Sign Systems, Inc.
f. Metal Arts; Div. of L&H Mfg. Co.
g. Mohawk Sign Systems.
h. Nelson-Harkins Industries.
i. Signature Signs, Incorporated.
j. Signs Fab, Inc.
k. Southwell Company (The).
l. Supersine Company (The).

2. Character Material: Clear Aluminum.
3. Character Height: As indicated on drawings.
4. Thickness: Manufacturer's standard for size of character [Minimum 0.25 inch (6.35 mm)].
5. Finish: Brushed.
6. Color: Clear coat, semi-gloss.
7. Mounting: Projected spacer mounting for 2-inch distance from wall.

2.3 ACCESSORIES

A. Fasteners and Anchors: Manufacturer's standard as required for secure anchorage of signage, noncorrosive and compatible with each material joined, and complying with the following:

1. Use concealed fasteners and anchors unless indicated to be exposed.
2. For exterior exposure, furnish stainless-steel devices unless otherwise indicated.
3. Exposed Metal-Fastener Components, General:

a. Fabricated from same basic metal and finish of fastened metal unless otherwise indicated.

4. Sign Mounting Fasteners:

a. Concealed Studs: Concealed (blind), threaded studs welded or brazed to back of sign material, screwed into back of sign assembly, or screwed into tapped lugs cast integrally into back of cast sign material, unless otherwise indicated.
b. Projecting Studs: Threaded studs with sleeve spacer, welded or brazed to back of sign material, screwed into back of sign assembly, or screwed into tapped lugs cast integrally into back of cast sign material, unless otherwise indicated.

2.4 FABRICATION

A. General: Provide manufacturer's standard sign assemblies according to requirements indicated.

1. Mill joints to a tight, hairline fit. Form assemblies and joints exposed to weather to resist water penetration and retention.
2. Provide welds and brazes behind finished surfaces without distorting or discoloring exposed side. Clean exposed welded and brazed connections of flux, and dress exposed and contact surfaces.
3. Conceal connections if possible; otherwise, locate connections where they are inconspicuous.
4. Internally brace signs for stability and for securing fasteners.
5. Provide rebates, lugs, and brackets necessary to assemble components and to attach to existing work. Drill and tap for required fasteners. Use concealed fasteners where possible; use exposed fasteners that match sign finish.
6. Castings: Fabricate castings free of warp, cracks, blowholes, pits, scale, sand holes, and other defects that impair appearance or strength. Grind, wire brush, sandblast, and buff castings to remove seams, gate marks, casting flash, and other casting marks before finishing.

2.5 ALUMINUM FINISHES

A. Baked-Enamel Finish: AA-C12C42R1x (Chemical Finish: cleaned with inhibited chemicals; Chemical Finish: acid-chromate-fluoride-phosphate conversion coating; Organic Coating: as specified below). Apply baked enamel complying with paint manufacturer's written instructions for cleaning, conversion coating, and painting.

1. Organic Coating: Thermosetting, modified-acrylic enamel primer/topcoat system complying with AAMA 2603 except with a minimum dry film thickness of 1.5 mils (0.04 mm), medium gloss.

PART 3 - EXECUTION

3.1 INSTALLATION

A. General: Install signs using mounting methods indicated and according to manufacturer's written instructions.

1. Install signs level, plumb, true to line, and at locations and heights indicated, with sign surfaces free of distortion and other defects in appearance.

2. Before installation, verify that sign surfaces are clean and free of materials or debris that would impair installation.
3. Corrosion Protection: Coat concealed surfaces of exterior aluminum in contact with grout, concrete, masonry, wood, or dissimilar metals, with a heavy coat of bituminous paint.

B. Mounting Methods:

1. Concealed Studs: Using a template, drill holes in substrate aligning with studs on back of sign. Remove loose debris from hole and substrate surface.

   a. Masonry Substrates: Fill holes with adhesive. Leave recess space in hole for displaced adhesive. Place sign in position and push until flush to surface, embedding studs in holes. Temporarily support sign in position until adhesive fully sets.
   b. Thin or Hollow Surfaces: Place sign in position and flush to surface, install washers and nuts on studs projecting through opposite side of surface, and tighten.

2. Projecting Studs: Using a template, drill holes in substrate aligning with studs on back of sign. Remove loose debris from hole and substrate surface.

   a. Masonry Substrates: Fill holes with adhesive. Leave recess space in hole for displaced adhesive. Place spacers on studs, place sign in position, and push until spacers are pinched between sign and substrate, embedding the stud ends in holes. Temporarily support sign in position until adhesive fully sets.
   b. Thin or Hollow Surfaces: Place spacers on studs, place sign in position with spacers pinched between sign and substrate, and install washers and nuts on stud ends projecting through opposite side of surface, and tighten.

C. Remove temporary protective coverings and strippable films as signs are installed.

END OF SECTION 101419

Room Finish Schedule

ROOM NO.	ROOM NAME	FLOOR	BASE	WALLS NORTH	WALLS EAST	WALLS SOUTH	WALLS WEST	CEILING FINISH	ROOM FINISH KEY NOTES
SECOND FLOOR									
200A	SECURE LOBBY	CPT-1	PB-1	PWP-1	PNT-2	PNT-2	PNT-2	ACT-1	
200B		--	--	--	--	--	--	--	
201	TOILET	PT-4 / PT-5	PT-3	PT-6 / PT-7	PT-6 / PT-7	PT-6 / PT-7	PT-6 / PT-7	ACT-1	
202	CORRIDOR	CPT-1	RB-1	PNT-2	PNT-2	PNT-2	PNT-2	ACT-1	
203	HOTELING OFFICE	CPT-1	RB-1	PNT-2	PNT-2	PNT-4	PNT-2	ACT-1	
204	SOCIAL WORK OFFICE	CPT-1	RB-1	PNT-4	PNT-2	PNT-4	PNT-2	ACT-1	
205	FLEX OFFICE	CPT-1	RB-1	PNT-4	PNT-2	PNT-2	PNT-2	ACT-1	
206	RECEPTION	CPT-1	RB-1	PNT-4	PNT-2	PNT-2	PNT-2	ACT-1	
207	DB SERGEANT OFFICE	CPT-1	RB-1	PNT-4	PNT-2	PNT-2	PNT-2	ACT-1	
208	STORAGE	--	--	--	--	--	--	--	
209	CONFERENCE	CPT-1	RB-1	WC-1	WC-1	WC-1	WC-1	ACT-1	3
210	EXISTING CORRIDOR	CPT-1	RB-1	PNT-2	PNT-2	PNT-2	PNT-2	ACT-1	
211	EXISTING I.T. ROOM	ESD-1	RB-1	PNT-2	PNT-2	PNT-2	PNT-2	ACT-1	
212	I.T. ROOM	ESD-1	RB-1	PNT-2	PNT-2	PNT-2	PNT-2	ACT-1	
213	TEMP. DISPATCH/MEETING	CPT-1	RB-1	PNT-2	PNT-2	PNT-2	PNT-2	ACT-1	3
214	NEW OFFICE	CPT-1	RB-1	PNT-2	PNT-2	PNT-4	PNT-2	ACT-1	1, 3
215	CLOSET	CPT-1	RB-1	PNT-2	PNT-2	PNT-2	PNT-2	ACT-1	
216	FILE STOR./OPEN WORK AREA	CPT-1	RB-1	PNT-2	PNT-2	PNT-2	PNT-2	ACT-1	3
217	NEW OFFICE	CPT-1	RB-1	PNT-2	PNT-2	PNT-4	PNT-2	ACT-1	3
218	NEW OFFICE	CPT-1	RB-1	PNT-4	PNT-2	PNT-2	PNT-2	ACT-1	3
219	FIRE MARSHAL OFFICE	CPT-1	RB-1	PNT-4	PNT-2	PNT-2	PNT-2	ACT-1	3
220	CLOSET	CPT-1	RB-1	PNT-2	PNT-2	PNT-2	PNT-2	ACT-1	
221	CLOSET	CPT-1	RB-1	PNT-2	PNT-2	PNT-2	PNT-2	ACT-1	
222	OFFICE	--	--	--	--	--	--	ACT-1	
223	NEW OPEN OFFICE AREA	CPT-1	RB-1	PNT-2	PNT-2	PNT-2	PNT-2	ACT-1	
224	CLOSET	CPT-1	RB-1	PNT-2	PNT-2	PNT-2	PNT-2	ACT-1	
225	BREAK ROOM	LVT-1	RB-1	PNT-4	PNT-2	PNT-2	PNT-4	ACT-1	
226	WORK ROOM	LVT-1	RB-1	PNT-2	PNT-2	PNT-2	PNT-2	ACT-1	
227	STORAGE ROOM	--	--	--	--	--	--	--	
228	ORDINANCE OFFICERS	CPT-1	RB-1	PNT-2	PNT-2	PNT-2	PNT-2	--	
229	MEETING ROOM	--	--	--	--	--	--	ACT-1	
229A	CLOSET	--	--	--	--	--	--	ACT-1	
230	CORRIDOR	CPT-1	RB-1	PNT-2	PNT-2	PNT-2	PNT-2	ACT-1	
231	EXISTING OPEN OFFICE	CPT-1	RB-1	PNT-2	PNT-2	PNT-2	PNT-2	ACT-1	
232	MEN'S RESTROOM	PT-5	PT-3	PT-6 / PT-7	PT-6 / PT-7	PT-6 / PT-7	PT-6 / PT-7	ACT-1	
233	JANITOR'S CLOSET	LVT-1	RB-1	PNT-1	PNT-1	PNT-1	PNT-1	ACT-1	
234	WOMEN'S RESTROOM	PT-5	PT-3	PT-6 / PT-7	PT-6 / PT-7	PT-6 / PT-7	PT-6 / PT-7	ACT-1	
235	TOILET ROOM	--	--	--	--	--	--	--	
236	OFFICE	--	--	--	--	--	--	ACT-1	
237	OFFICE	--	--	--	--	--	--	ACT-1	
238	OFFICE	--	--	--	--	--	--	ACT-1	
239	OFFICE	--	--	--	--	--	--	ACT-1	
240	OFFICE	--	--	--	--	--	--	ACT-1	
241	OFFICE	--	--	--	--	--	--	ACT-1	
241A	CLOSET	--	--	--	--	--	--	--	
242	TOILET	--	--	--	--	--	--	--	
243	CLOSET	--	--	--	--	--	--	--	
244	CORRIDOR	--	--	--	--	--	--	ACT-1	
245	CORRIDOR	--	--	--	--	--	--	ACT-1	
246	OFFICE	--	--	--	--	--	--	--	
247	SPC SERVICES LIEUTENANT	--	--	--	--	--	--	--	
248	SPC SERVICES	--	--	--	--	--	--	ACT-1	
249	MECHANICAL	--	--	--	--	--	--	--	
250	STORAGE	--	--	--	--	--	--	ACT-1	
251	OFFICE	--	--	--	--	--	--	ACT-1	
252	OFFICE	--	--	--	--	--	--	ACT-1	
253	OFFICE	--	--	--	--	--	--	ACT-1	
254	LAB	--	--	--	--	--	--	ACT-1	
255	COPY ROOM	--	--	--	--	--	--	--	
256	PASSAGE	--	--	--	--	--	--	ACT-1	
257	OFFICE	--	--	--	--	--	--	ACT-1	
258	OPEN OFFICE	--	--	--	--	--	--	ACT-1	
259	INTERIVEW ROOM	--	--	--	--	--	--	--	
260	INTERVIEW ROOM	--	--	--	--	--	--	ACT-1	

Room Finish Key Notes:

1. NORTH PLAIN ONLY (PNT-4) DO NOT INCLUDE COLUMNS OR CLOSE)
2. INSTALL NEW GYP BOARD CEILING TO MATCH EXISTING, REQUIRED FOR MEP WORK. MATCH ANY SECURITY PROVISIONS, INCLUDING THICKNESS, FRAMING & SUPPORT AS REQUIRED TO MAINTAIN SECURITY REQUIREMENTS
3. INSTALL NEW ROLLER SHADES (RS-1) AT EXTERIOR WINDOWS ALONG EAST ELEVATION ONLY. REMOVE EXISTING SHADES WHERE PRESENT.

Room Finish Schedule

ROOM NO.	ROOM NAME	FLOOR	BASE	WALLS NORTH	WALLS EAST	WALLS SOUTH	WALLS WEST	CEILING FINISH	ROOM FINISH KEY NOTES
FIRST FLOOR									
100	VESTIBULE	CPT-2	--	--	--	--	--		
101	LOBBY	CPT-2 / PT-1 / PT-2	PT-3	PWP-1	PWP-1	PWP-1	PWP-1	ACT-1 / LWC-1 / PNT-1	
102	INTERVIEW	PT-1	PT-2	PNT-2	PNT-2	PNT-2	PNT-2	PNT-1	
103	PUBLIC RESTROOM	PT-5	PT-3	PT-7 / PT-8	PT-7 / PT-8	PT-7 / PT-8	PT-7 / PT-8	PNT-1	
104	ELEVATOR LOBBY	PT-1	PT-3	PNT-2	PNT-2	PNT-2	PNT-2	ACT-1	
105	VENDING	PT-1	PT-3	PNT-2	PNT-2	PNT-2	PNT-2	ACT-1 / PNT-1	
106	INTERVIEW ROOM	CPT-1	RB-1	AWP-1 / AWP-2	AWP-1 / AWP-2	AWP-1 / AWP-2	AWP-1 / AWP-2	PNT-1	
107	INTERVIEW ROOM	CPT-1	RB-1	AWP-1 / AWP-2	AWP-1 / AWP-2	AWP-1 / AWP-2	AWP-1 / AWP-2	PNT-1	
108	CORRIDOR	PT-1	PT-3	PNT-2	PNT-2	PNT-2	PNT-2	ACT-1	
109	OFFICE	CPT-1	RB-1	PNT-2	PNT-2	PNT-2	PNT-4	ACT-1	
110	CORRIDOR	PT-1 / SC-1	RB-1	PNT-2	PNT-2	PNT-2	PNT-2	ACT-1	
111	CORRIDOR	SC-1	RB-1	PNT-2	PNT-2	PNT-2	PNT-2	ACT-1	
112	DESK OFFICER	CPT-1	RB-1	PNT-2	PNT-2	PNT-2	PNT-4	ACT-1	
113	FINGER PRINTING	CPT-1	RB-1	PNT-2	PNT-2	PNT-2	PNT-2	ACT-1	
114	RECORDS/CLERK	CPT-1	RB-1	PNT-2	PNT-2	PNT-2	PNT-4	ACT-1	3
115	OFFICE	CPT-1	RB-1	PNT-2	PNT-2	PNT-2	PNT-4	ACT-1	3
116	OFFICE	CPT-1	RB-1	PNT-2	PNT-2	PNT-2	PNT-4	ACT-1	
117	CENTRAL VACUUM	SC-1	RB-1	PNT-2	PNT-2	PNT-2	PNT-2	--	
118	DISPATCH	ESD-2	RB-2	AWP-3	AWP-3	PNT-2	AWP-3	ACT-1	
119	SUPERVISORS OFFICE	ESD-2	RB-2	PNT-2	PNT-2	PNT-2	PNT-2	ACT-1	
120	RESTROOM	PT-5	PT-6	PT-7 / PT-8	PT-7 / PT-8	PT-7 / PT-8	PT-7 / PT-8	ACT-1	
121	CORRIDOR	SC-1	RB-1	PNT-2	PNT-2	PNT-2	PNT-2	ACT-1	
122	OFFICE	CPT-1	RB-1	PNT-2	PNT-2	PNT-2	PNT-2	ACT-1	3
123	BREAK ROOM	LVT-1	RB-1	PNT-4	PNT-2	PNT-2	PNT-2	ACT-1	
124	MECHANICAL ROOM	--	--	--	--	--	--	ACT-1	
125A	CLOSET	CPT-2	RB-2	PNT-2	PNT-2	PNT-2	PNT-2	--	
125B	IT CLOSET	--	--	PNT-2	PNT-2	PNT-2	PNT-2	--	
126	SECURE CORRIDOR	RSF-1	RB-2	MATCH EXST	MATCH EXST	MATCH EXST	MATCH EXST	ACT-1	
127	CORRIDOR	--	--	--	--	--	--	ACT-1	
128	WOMEN'S LOCKER ROOM	--	--	--	--	--	--	ACT-1	
129	WOMEN'S TOILET	--	--	--	--	--	--	ACT-1	
130	MEN'S LOCKER ROOM	--	--	--	--	--	--	ACT-1	
131	MEN'S LOCKER ROOM	--	--	--	--	--	--	ACT-1	
132	MEN'S LOCKER ROOM	--	--	--	--	--	--	ACT-1	
133	MEN'S TOILET	--	--	--	--	--	--	ACT-1	
134	PROPERTY STORAGE	--	--	--	--	--	--	ACT-1	
135	CORRIDOR	--	--	--	--	--	--	ACT-1	
136	CORRIDOR	--	--	--	--	--	--	ACT-1	
137	VESTIBULE	--	--	--	--	--	--	--	
138	PATROL EQUIPMENT	--	--	--	--	--	--	--	
139	ARSENAL	--	--	--	--	--	--	--	
140	ELECTRICAL EQUIPMENT	--	--	--	--	--	--	--	
141	BOILER ROOM	--	--	--	--	--	--	--	
142	MECHANICAL EQUIPMENT	--	--	--	--	--	--	--	
143	LUNCHROOM/LIBRARY	--	--	--	--	--	--	ACT-1	
144A	DEBRIEFING	--	--	--	--	--	--	ACT-1	
144B	STORAGE	--	--	--	--	--	--	ACT-1	
144C	STORAGE	--	--	--	--	--	--		
145	CORRIDOR	--	--	--	--	--	--	--	
146	VESTIBULE	--	--	--	--	--	--	--	
147	STAFF SPACE	--	--	--	--	--	--	PNT-1	?
148	KITCHEN	--	--	--	--	--	--	PNT-1	?
149	MECH. EQUIPMENT	--	--	--	--	--	--	--	
150	CORRIDOR	--	--	--	--	--	--	PNT-1	?
151	TOILET	--	--	--	--	--	--	--	
152	STORAGE	--	--	--	--	--	--	PNT-1	?
153	VESTIBULE	--	--	--	--	--	--	PNT-1	
154	JANITOR'S CLOSET	--	--	--	--	--	--	--	
155	SECURE CORRIDOR	--	--	--	--	--	--	--	
156	HOLDING CELL	--	--	--	--	--	--	--	
157	VESTIBULE	--	--	--	--	--	--	--	
158	DETOX CELL	--	--	--	--	--	--	--	
159	BOOKING	--	--	--	--	--	--	--	
160	DAYROOM	--	--	--	--	--	--	--	
161	CELL 4	--	--	--	--	--	--	--	
162	CELL 3	--	--	--	--	--	--	--	
163	CELL 2	--	--	--	--	--	--	--	
164	CELL 1	--	--	--	--	--	--	--	
165	FEMALE HOLDING	--	--	--	--	--	--	--	
166	JUVENILE HOLDING	--	--	--	--	--	--	--	
167	CORRIDOR	--	--	--	--	--	--	--	
168		--	--	--	--	--	--	--	
169	SALLY PORT	--	--	--	--	--	--	--	
170	OFFICE	--	--	--	--	PNT	--	--	
171	OFFICE	--	--	--	--	--	--	--	3

PARTNERS

PARTNERS in Architecture, PLC
65 MARKET STREET
MOUNT CLEMENS, MI 48043
P 586.469.3600

Statement of Intellectual Property

The ideas, concepts, drawings and thoughts conveyed herein are the intellectual property of PARTNERS in Architecture, PLC, 65 Market Street, Mount Clemens, MI, 48043 (P 586.469.3600). This set of drawings, in whole or in part, may not be reproduced, without the written consent of PARTNERS in Architecture, PLC. This information is protected under U.S. Copyright Law, all rights reserved.

© Copyright 2022

THIS DRAWING IS NOT TO BE USED FOR CONSTRUCTION UNLESS ISSUED BELOW SPECIFICALLY FOR "BIDDING / CONSTRUCTION"

CONSULTANT

KEY PLAN

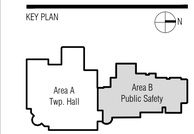

OWNER

Canton Township
Public Safety

PROJECT NAME

Public Safety Building
Interior Renovations

1150 S. Canton Center Road
Canton, MI 48188

PROJECT NO.

21-130

ISSUES / REVISIONS

SD-Owner Mtg	6/16/2021
SD-Owner Mtg	7/1/2021
SD Issue	9/20/2021
DD-Progress Review	10/12/2021
QAQC	2/18/2022
Bidding / Construction	3/9/2022
Addendum #1	3/18/2022

DRAWN BY
ASY, CJJ

CHECKED BY
JAV

APPROVED BY
MAM

SHEET NAME

ROOM FINISH SCHEDULE

SHEET NO.
A0-04

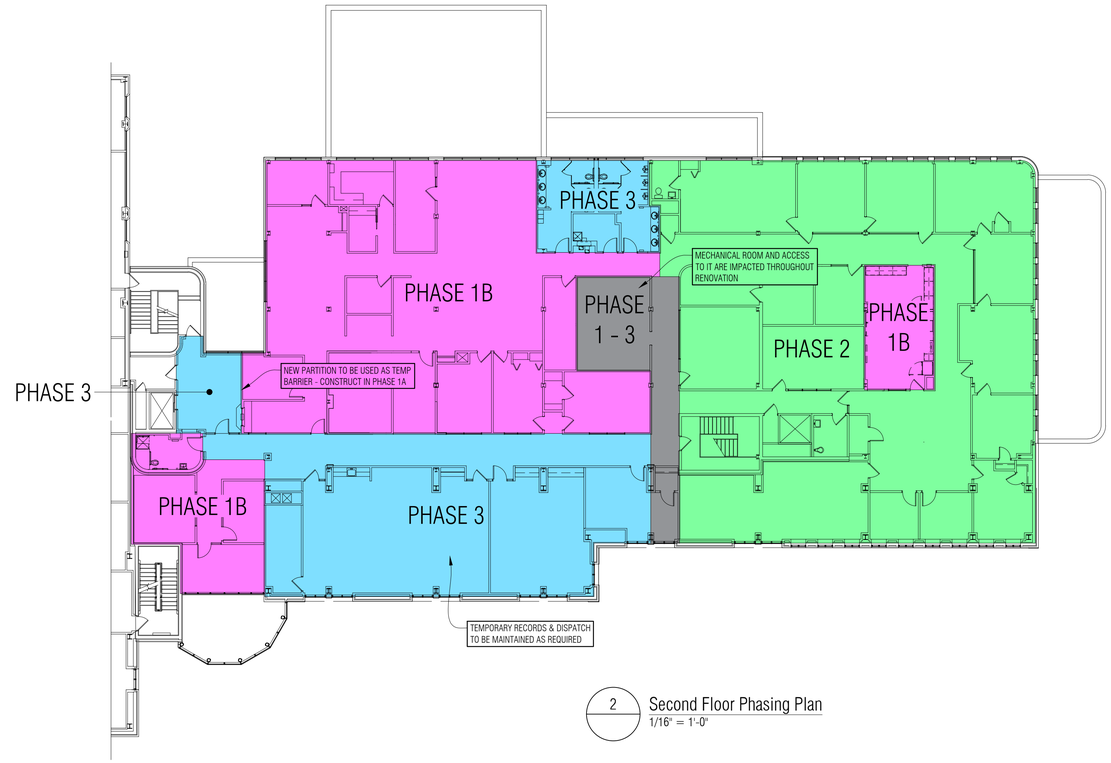

2 Second Floor Phasing Plan
1/16" = 1'-0"

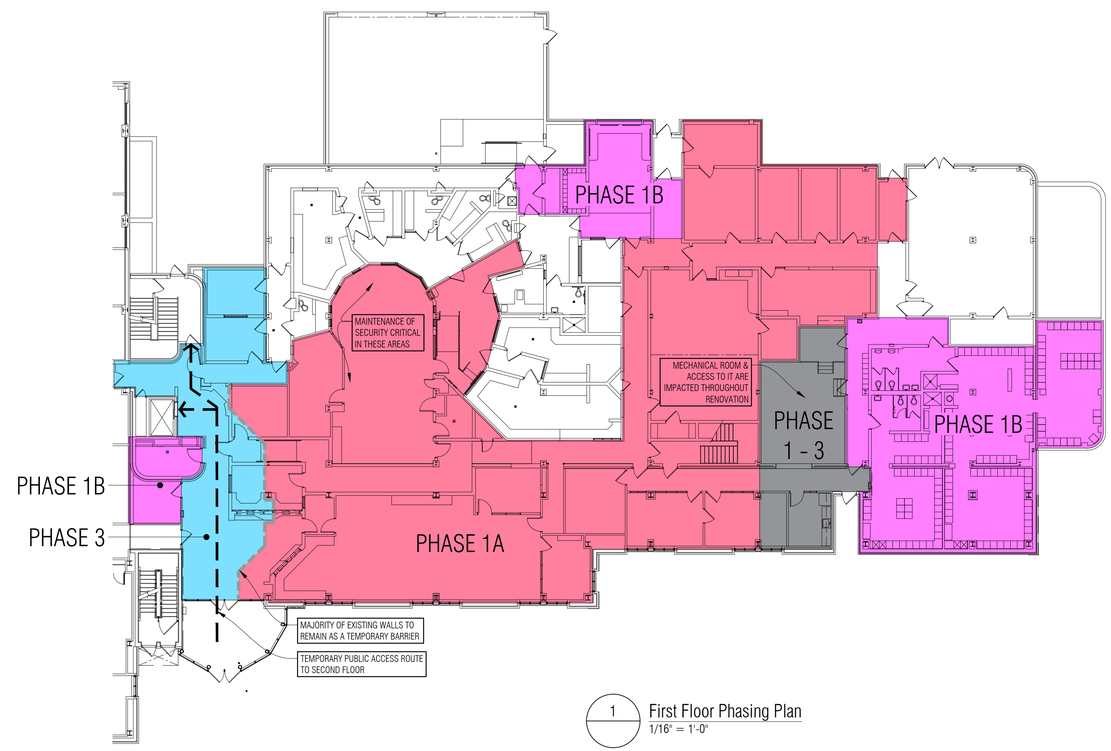

1 First Floor Phasing Plan
1/16" = 1'-0"

PHASING PLAN LEGEND

- PHASE 1A
- PHASE 1B
- PHASE 2
- PHASE 3
- PHASES 1-3

PARTNERS

PARTNERS in Architecture, PLC
65 MARKET STREET
MOUNT CLEMENS, MI 48043
P 586.469.3600

Statement of Intellectual Property

The ideas, concepts, drawings and thoughts conveyed herein are the intellectual property of PARTNERS in Architecture, PLC, 65 Market Street, Mount Clemens, MI, 48043 (P 586.469.3600). This set of drawings, in whole or in part, may not be reproduced, without the written consent of PARTNERS in Architecture, PLC. This information is protected under U.S. Copyright Law, all rights reserved.

© Copyright 2022

THIS DRAWING IS NOT TO BE USED FOR CONSTRUCTION UNLESS ISSUED BELOW SPECIFICALLY FOR "BIDDING / CONSTRUCTION"

CONSULTANT

KEY PLAN

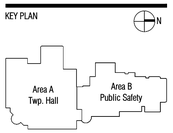

OWNER

Canton Township
Public Safety

PROJECT NAME

Public Safety Building
Interior Renovations

1150 S. Canton Center Road
Canton, MI 48188

PROJECT NO.

21-130

ISSUES / REVISIONS

Addendum #1	3/18/2022

DRAWN BY
CJJ

CHECKED BY
JAV

APPROVED BY
MAM

SHEET NAME

PROJECT PHASING PLAN

SHEET NO.
A0-08

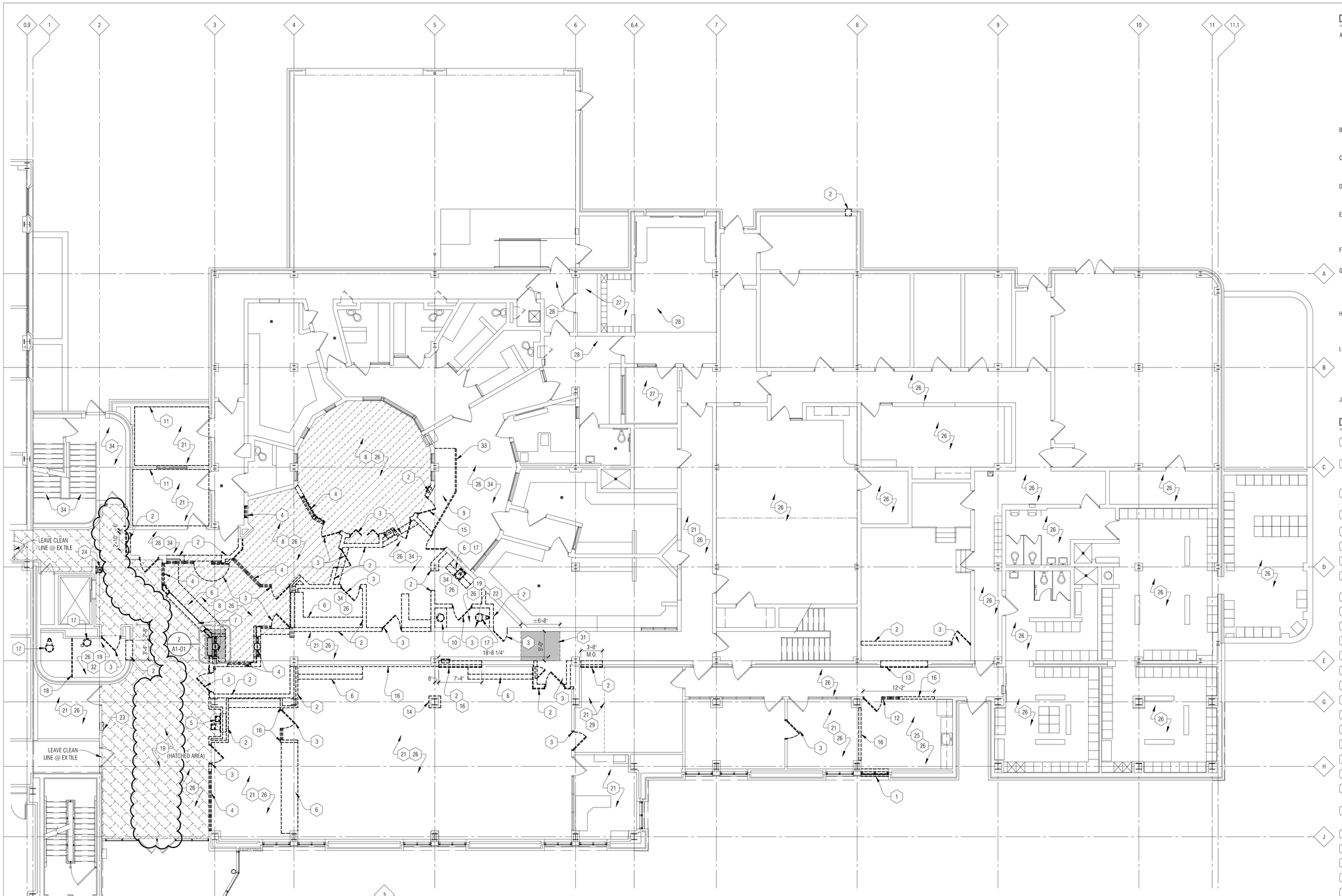

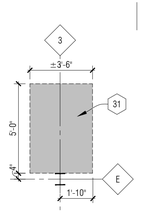

2 / A1-01 Slab Removal Plan
1/8" = 1'-0"

N 1 Demolition First Floor Plan
1/8" = 1'-0"

DEMOLITION PLAN GENERAL NOTES:

A. ALL DEMOLITION DRAWINGS AND DEMOLITION DETAILS ARE PROVIDED TO SHOW THE GENERAL SCOPE OF THE DEMOLITION WORK. IT IS THE CONTRACTOR'S RESPONSIBILITY TO PERFORM ALL DEMOLITION WORK NECESSARY TO ACCOMPLISH NEW WORK. THE DEMOLITION DRAWINGS AND DETAILS MAY NOTE TYPICAL ITEMS IN SOME AREAS, WHICH APPLY IN OTHER AREAS (AND ARE DESIGNATED WITH DASHED, HIDDEN OR STRUCK THRU LINES). COORDINATE ALL DEMOLITION WORK WITH ALL ARCHITECTURAL, STRUCT., MECH. AND ELEC. DRAWINGS. CONTRACTOR RESPONSIBLE TO REFERENCE ALL DRAWINGS/ SPECIFICATIONS TO CONFIRM EXTENT OF DEMOLITION WORK.

B. ALL REMOVED ITEMS, WALLS, FLOORS CEILING, OPENINGS, ETC ARE TO BE PATCHED/REPAIRED AND PREPPED TO RECEIVE NEW WORK AND/OR FINISHES.

C. ALL CONSTRUCTION AND DEMOLITION MEANS, METHODS AND SAFETY PRECAUTIONS SHALL BE THE SOLE RESPONSIBILITY OF THE CONTRACTOR.

D. WALL REMOVAL THAT TERMINATES INTO A WALL OR CEILING TO REMAIN SHALL BE COMPLETELY REMOVED FREE OF PROJECTIONS, READY TO RECEIVE NEW WORK.

E. REMOVE ALL ITEMS PROJECTING FROM EXISTING WALLS OR FLOORS TO REMAIN (BLOCKING, SCREWS, FASTENERS, PIPES, CONDUITS, MOUNTING PLATES, FIXED EQUIPMENT, ETC). PATCH AND REPAIR FOR NEW FINISH.

F. CONTRACTOR IS RESPONSIBLE FOR FIELD VERIFYING AND UNDERSTANDING EXISTING CONDITIONS. PRIOR TO BIDDING

G. CONTRACTOR SHALL PROTECT EXISTING BUILDING ELEMENTS FROM DAMAGE CAUSED BY CONSTRUCTION OR CONSTRUCTION TRADES. CONTRACTOR SHALL REPAIR ALL DAMAGED AREAS (IDENTIFIED BY OWNER, ARCHITECT, OR CONSTRUCTION MANAGER) AT NO ADDITIONAL COST.

H. MAINTAIN EXISTING FIRE RATING WHERE OCCURS AND WHERE POSSIBLE DURING DEMOLITION. REFER TO CODE AND LIFE SAFETY SHEETS FOR MORE INFORMATION AS WELL AS CONSTRUCTION MANAGER'S INSTRUCTIONS.

I. ASBESTOS AND OTHER HAZARDOUS MATERIALS WILL BE REMOVED BY OWNER'S ABATEMENT CONTRACTOR PRIOR TO START OF CONSTRUCTION. IF ANY SUSPECTED HAZARDOUS MATERIAL IS ENCOUNTERED, STOP WORK IN THAT AREA AND IMMEDIATELY INFORM THE ARCHITECT, CONSTRUCTION MANAGER, AND OWNER.

J. DISPOSE OF ALL DEMOLITION MATERIALS LEGALLY OFF-SITE, U.O.N.

DEMOLITION PLAN KEY NOTES:

1. WINDOWS TO BE REMOVED DURING CONSTRUCTION AND REINSTALLED AFTERWARDS FOR MECH EQPM ACCESS.
2. REMOVE EXISTING MASONRY WALL CONSTRUCTION TO LIMITS SHOWN. DEMO TO PREPARE FOR TOOTHED-IN NEW CONSTRUCTION OR NEW FINISH - SEE NEW WORK PLANS.
3. REMOVE EXISTING DOOR AND FRAME (INCLUDING SIDELITE, IF PRESENT).
4. REMOVE EXISTING GLAZING AND FRAME.
5. SALVAGE DRINKING FOUNTAIN FOR REINSTALLATION.
6. REMOVE EXISTING COUNTER AND RELATED MILLWORK.
7. REMOVE EXISTING PASS-THRU GLAZING AND FRAME.
8. HATCHED AREA OF RAISED FLOOR CONSTRUCTION TO BE REMOVED COMPLETE
9. REMOVE EXISTING RAMP CONSTRUCTION.
10. REMOVE VANITY AND SINK - SEE MECHANICAL
11. REMOVE ACOUSTICAL WALL PANELS IN ROOM COMPLETE
12. SALVAGE DOOR & SIDELITE FRAME FOR REINSTALLATION
13. REMOVE EXISTING CMU INFILL.
14. REMOVE EXISTING GYPSUM BOARD CLADDING.
15. SALVAGE DOOR & FRAME FOR REINSTALLATION
16. REMOVE EXISTING GYPSUM BOARD WALL CONSTRUCTION.
17. REMOVE PLUMBING FIXTURE - SEE MECHANICAL
18. REMOVE TOILET PARTITIONS.
19. REMOVE FLOOR TILE & BASE COMPLETE DOWN TO SLAB
20. REMOVE CUBICLE PARTITIONS
21. REMOVE CARPET & WALL BASE COMPLETE
22. REMOVE CERAMIC TILE WALL FINISH. GRIND SURFACE SMOOTH TO RECEIVE NEW FINISH - SEE SCHED.
23. SALVAGE EXISTING FIRE EXTINGUISHER FOR RE-INSTALLATION - SEE NEW WORK PLANS
24. REMOVE DRINKING FOUNTAIN.
25. REMOVE VINYL TILE FLOOR & WALL BASE COMPLETE
26. REMOVE LAY-IN CEILING COMPLETE
27. REMOVE GYP BD & MTL FRAMED CELIING COMPLETE
28. REMOVE PORTION OF GYP BD & MTL FRAMED CEILING AS REQUIRED TO COMPLETE NEW MECHANICAL WORK - COORD W/ NEW WORK PLANS & MECHANICAL
29. REMOVE PORTION OF LAY-IN CEILING AS REQD FOR NEW WORK
30. REMOVE 2" DEPTH OF EXIST CONC FOR NEW SHOWER MORTAR BED - COORD SIZE W/ NEW WORK PLANS
31. SAWCUT & REMOVE PORTION OF CONC SLAB TO PROVIDE MIN 4" DEPTH NEW CONC RAMP - SEE NEW WORK DETAILS
32. REMOVE TOILET ACCESSORIES COMPLETE
33. REMOVE METAL PIPE RAILING COMPLETE
34. REMOVE RESILIENT SHEET / TILE FLOORING & BASE COMPLETE
35. NOT USED

PARTNERS

PARTNERS in Architecture, PLC
65 MARKET STREET
MOUNT CLEMENS, MI 48043
P 586.469.3600

Statement of Intellectual Property

The ideas, concepts, drawings and thoughts conveyed herein are the intellectual property of PARTNERS in Architecture, PLC, 65 Market Street, Mount Clemens, MI, 48043 (P 586.469.3600). This set of drawings, in whole or in part, may not be reproduced, without the written consent of PARTNERS in Architecture, PLC. This information is protected under U.S. Copyright Law, all rights reserved.

© Copyright 2022

THIS DRAWING IS NOT TO BE USED FOR CONSTRUCTION UNLESS ISSUED BELOW SPECIFICALLY FOR "BIDDING / CONSTRUCTION"

CONSULTANT

KEY PLAN

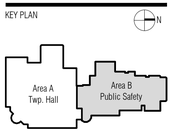

OWNER
Canton Township Public Safety

PROJECT NAME
Public Safety Building Interior Renovations

1150 S. Canton Center Road
Canton, MI 48188

PROJECT NO.
21-130

ISSUES / REVISIONS

SD-Owner Mtg	6/16/2021
SD-Owner Mtg	7/1/2021
SD Issue	9/20/2021
DD-Progress Review	10/12/2021
QAQC	2/18/2022
Bidding / Construction	3/9/2022
Addendum #1	3/18/2022

DRAWN BY
ASY, CJJ

CHECKED BY
JAV

APPROVED BY
MAM

SHEET NAME
DEMOLITION FIRST FLOOR PLAN

SHEET NO.
A1-01

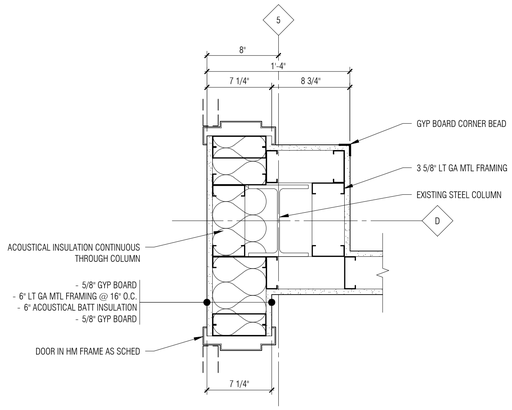

12 / A3-03 Detail
1-1/2" = 1'-0"

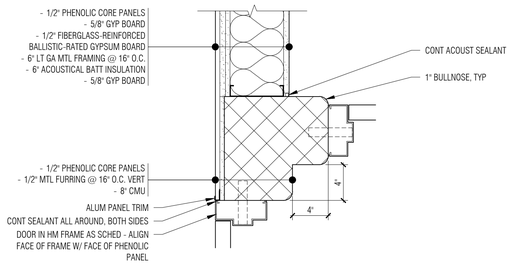

9 / A3-03 Detail
1-1/2" = 1'-0"

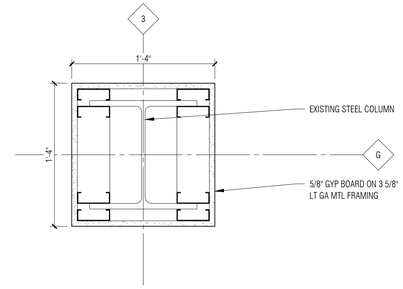

6 / A3-03 Detail
1-1/2" = 1'-0"

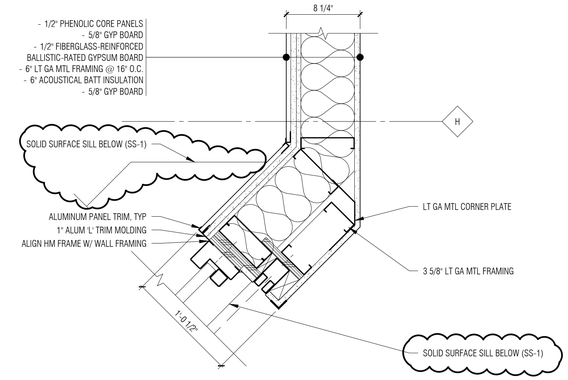

3 / A3-03 Detail
1-1/2" = 1'-0"

SEE DETAIL 2 THIS SHEET FOR SIMILAR / TYPICAL NOTES & DIMENSIONS

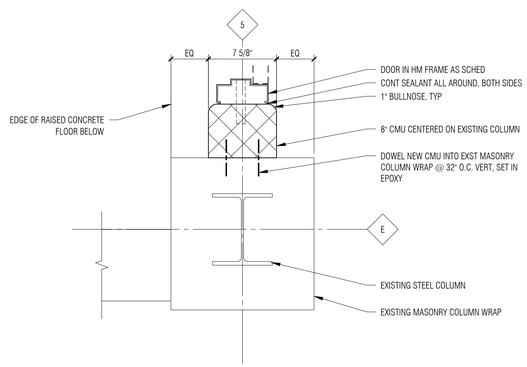

11 / A3-03 Detail
1-1/2" = 1'-0"

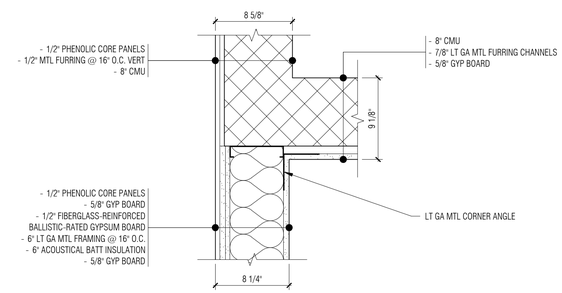

8 / A3-03 Detail
1-1/2" = 1'-0"

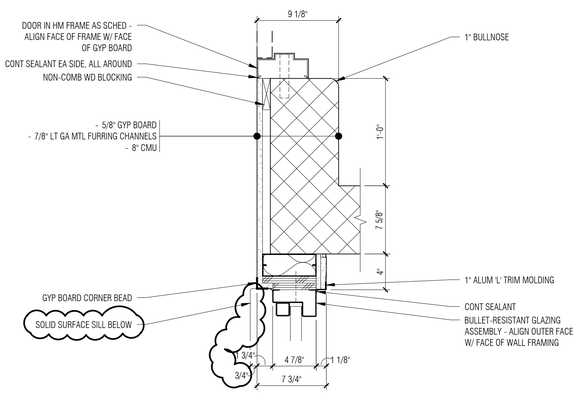

5 / A3-03 Detail
1-1/2" = 1'-0"

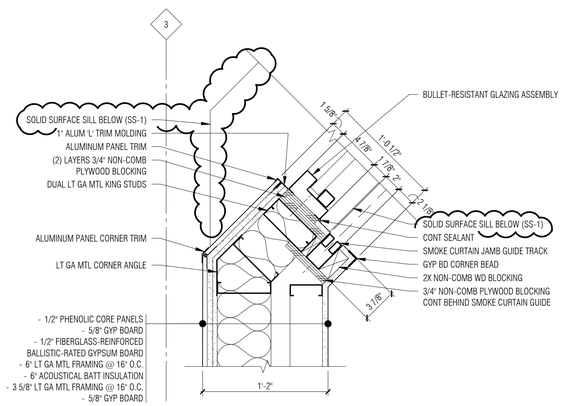

2 / A3-03 Detail
1-1/2" = 1'-0"

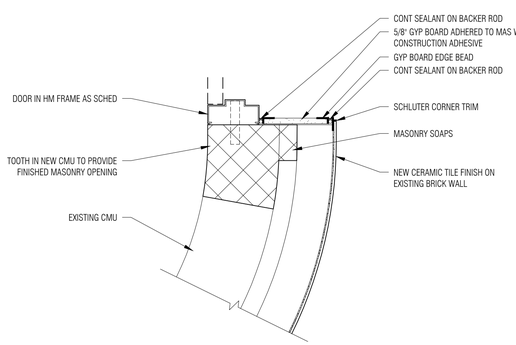

10 / A3-03 Detail
1-1/2" = 1'-0"

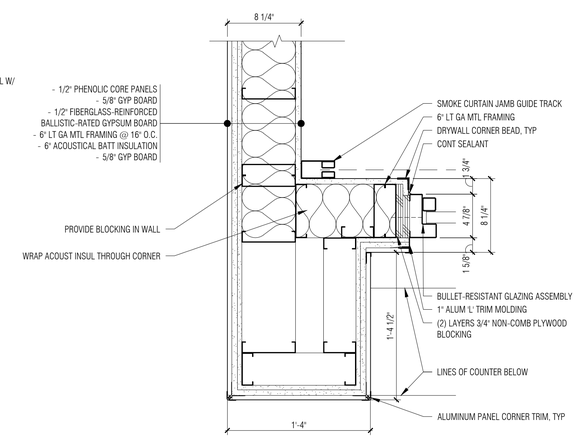

7 / A3-03 Detail
1-1/2" = 1'-0"

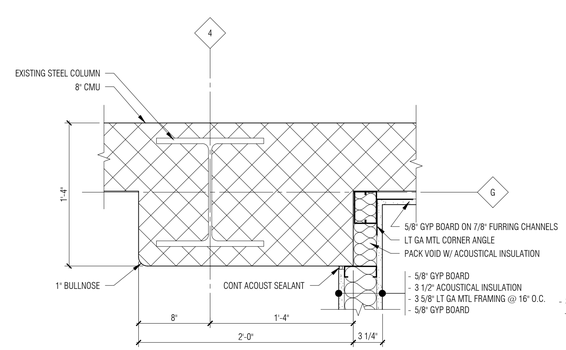

4 / A3-03 Detail
1-1/2" = 1'-0"

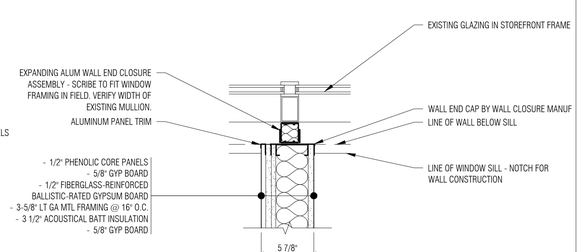

1 / A3-02 Detail
1-1/2" = 1'-0"

P:\2021\21-130-Canton PSD – Interior Renovations\02_CAD\A3-10 - Plan Details.dwg - 3/17/2022 4:15:36 PM - Chris Jewett

PARTNERS

PARTNERS in Architecture, PLC
65 MARKET STREET
MOUNT CLEMENS, MI 48043
P 586.469.3600

Statement of Intellectual Property

The ideas, concepts, drawings and thoughts conveyed herein are the intellectual property of PARTNERS in Architecture, PLC, 65 Market Street, Mount Clemens, MI, 48043 (P 586.469.3600). This set of drawings, in whole or in part, may not be reproduced, without the written consent of PARTNERS in Architecture, PLC. This information is protected under U.S. Copyright Law, all rights reserved.

© Copyright 2022

THIS DRAWING IS NOT TO BE USED FOR CONSTRUCTION UNLESS ISSUED BELOW SPECIFICALLY FOR "BIDDING / CONSTRUCTION"

CONSULTANT

KEY PLAN

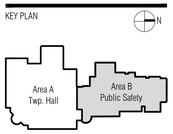

OWNER

Canton Township
Public Safety

PROJECT NAME

Public Safety Building
Interior Renovations

1150 S. Canton Center Road
Canton, MI 48188

PROJECT NO.

21-130

ISSUES / REVISIONS

SD-Owner Mtg	6/16/2021
SD-Owner Mtg	7/1/2021
SD Issue	9/20/2021
DD-Progress Review	10/12/2021
QAQC	2/18/2022
Bidding / Construction	3/9/2022
Addendum #1	3/18/2022

DRAWN BY
CJJ

CHECKED BY
JAV

APPROVED BY
MAM

SHEET NAME

PLAN DETAILS

SHEET NO.

A3-10

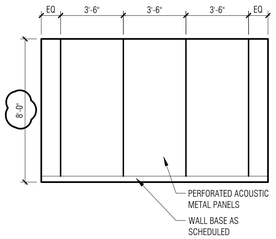

15 / A3-03 Interview Room 106
1/4" = 1'-0"

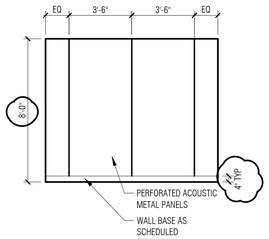

12 / A3-03 Interview Room 107
1/4" = 1'-0"

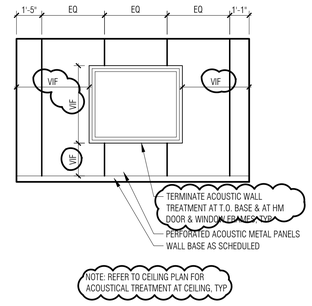

9 / A3-03 Interview Room 107
1/4" = 1'-0"

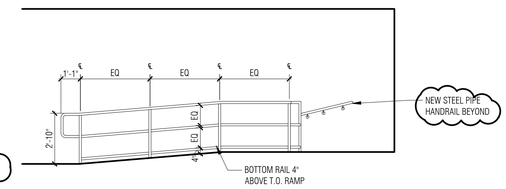

6 / A3-03 Secure Corridor 126
1/4" = 1'-0"

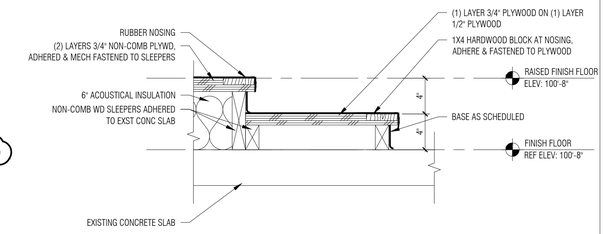

3 / A3-03 Detail
1-1/2" = 1'-0"

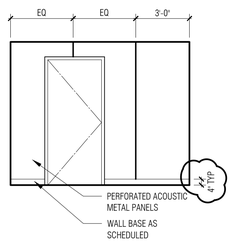

14 / A3-03 Interview Room 106
1/4" = 1'-0"

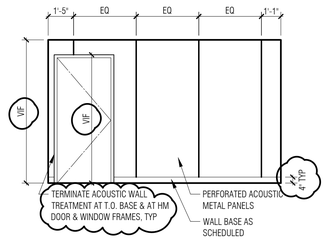

11 / A3-03 Interview Room 107
1/4" = 1'-0"

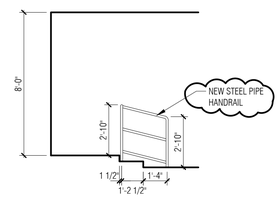

8 / A3-03 Secure Corridor 126 Stairs
1/4" = 1'-0"

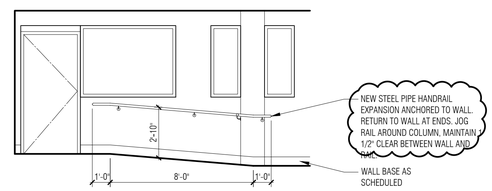

5 / A3-03 Secure Corridor 126
1/4" = 1'-0"

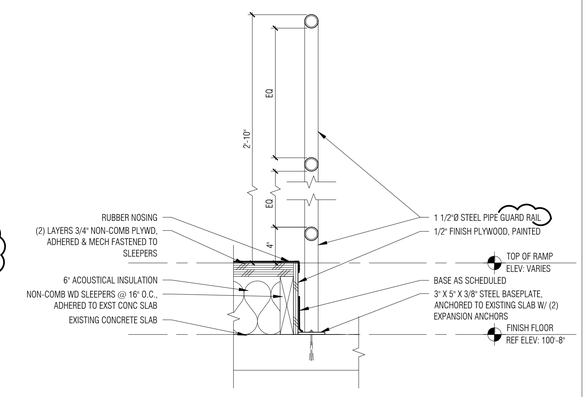

2 / A3-03 Detail
1-1/2" = 1'-0"

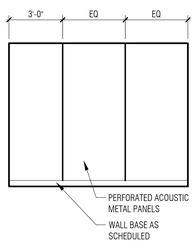

16 / A3-03 Interview Room 106
1/4" = 1'-0"

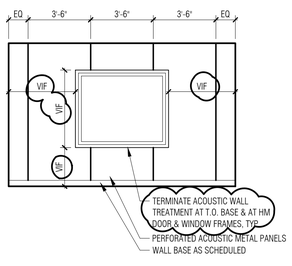

13 / A3-03 Interview Room 106
1/4" = 1'-0"

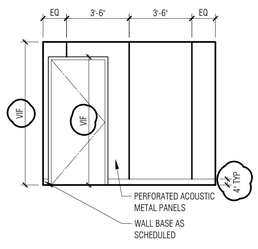

10 / A3-03 Interview Room 107
1/4" = 1'-0"

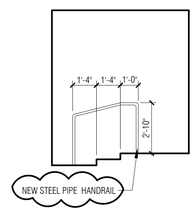

7 / A3-03 Secure Corridor 126 Stairs
1/4" = 1'-0"

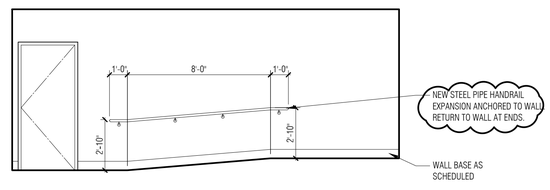

4 / A3-03 Corridor 110
1/4" = 1'-0"

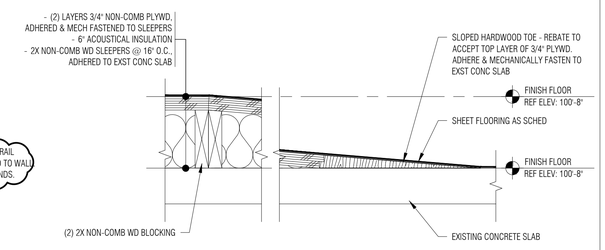

1 / A3-03 Detail
1-1/2" = 1'-0"

PARTNERS

PARTNERS in Architecture, PLC
65 MARKET STREET
MOUNT CLEMENS, MI 48043
P 586.469.3600

Statement of Intellectual Property

The ideas, concepts, drawings and thoughts conveyed herein are the intellectual property of PARTNERS in Architecture, PLC, 65 Market Street, Mount Clemens, MI, 48043 (P 586.469.3600). This set of drawings, in whole or in part, may not be reproduced, without the written consent of PARTNERS in Architecture, PLC. This information is protected under U.S. Copyright Law, all rights reserved.

© Copyright 2022

THIS DRAWING IS NOT TO BE USED FOR CONSTRUCTION UNLESS ISSUED BELOW SPECIFICALLY FOR: "BIDDING / CONSTRUCTION"

CONSULTANT

KEY PLAN

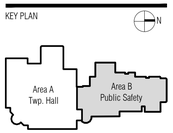

OWNER
Canton Township Public Safety

PROJECT NAME
Public Safety Building Interior Renovations

1150 S. Canton Center Road
Canton, MI 48188

PROJECT NO.
21-130

ISSUES / REVISIONS

SD-Owner Mtg	6/16/2021
SD-Owner Mtg	7/1/2021
SD Issue	9/20/2021
DD-Progress Review	10/12/2021
QAQC	2/18/2022
Bidding / Construction	3/9/2022
Addendum #1	3/18/2022

DRAWN BY
ASY, CJJ

CHECKED BY
JAV

APPROVED BY
MAM

SHEET NAME
SECTION DETAILS & INTERIOR ELEVATIONS

SHEET NO.
A6-11

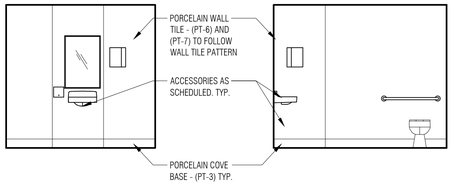

15 / A3-03 Restroom 120
1/4" = 1'-0"

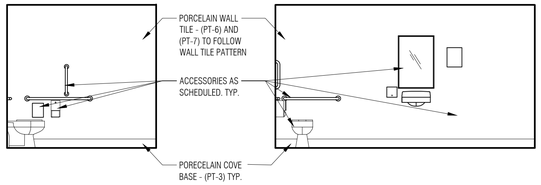

14 / A3-03 Restroom 120
1/4" = 1'-0"

13 / A3-03 Restroom 120
1/4" = 1'-0"

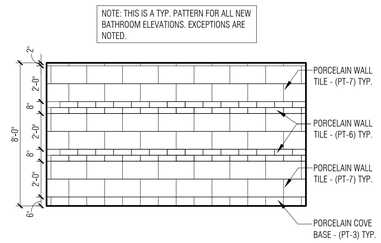

12 / A3-03 Public Restroom 103
1/4" = 1'-0"

11 / A8-01 Typical Bathroom Tile Pattern
1/4" = 1'-0"
A8-02

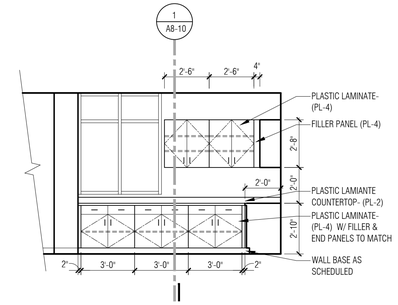

10 / A3-03 Records/Clerk
1/4" = 1'-0"

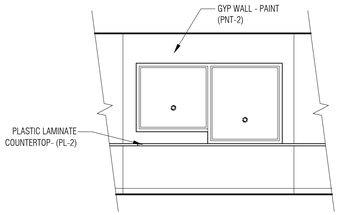

9 / A3-03 Records/Clerk
1/4" = 1'-0"

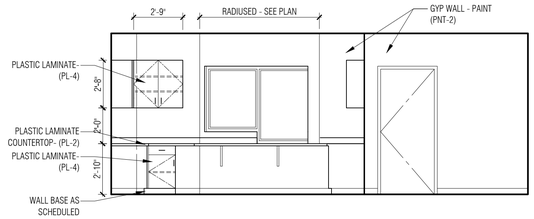

8 / A3-01 Records/Clerk
1/4" = 1'-0"

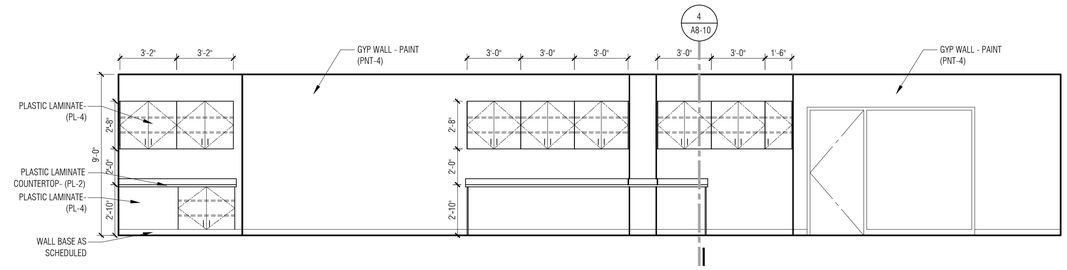

7 / A3-01 Records/Clerk 114
1/4" = 1'-0"

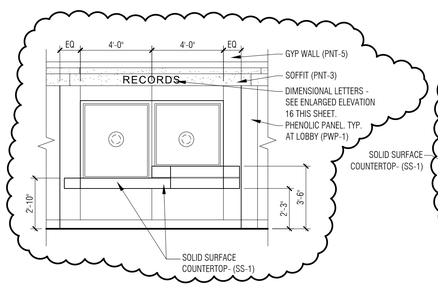

6 / A3-03 Lobby 101
1/4" = 1'-0"

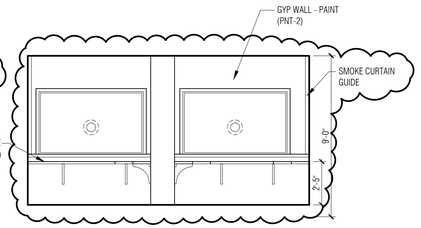

5 / A3-03 Desk Officer 112
1/4" = 1'-0"

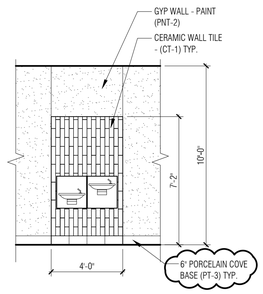

4 / A3-03 D.F. Alcove
1/4" = 1'-0"

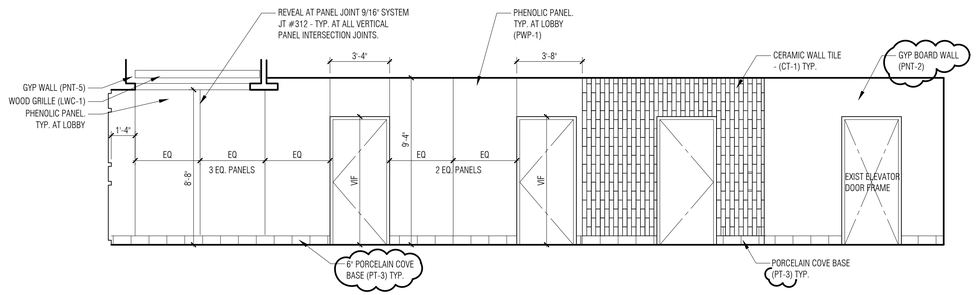

3 / A3-01 Lobby 101
1/4" = 1'-0"

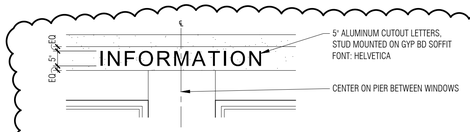

17 / A8-01 Enlarged Signage - Information
1/4" = 1'-0"

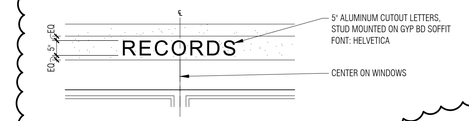

16 / A8-01 Enlarged Signage - Records
1/4" = 1'-0"

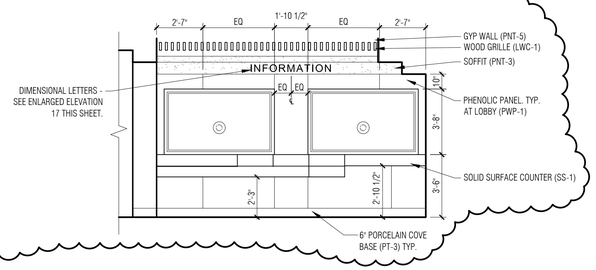

2 / A3-01 Lobby 101
1/4" = 1'-0"

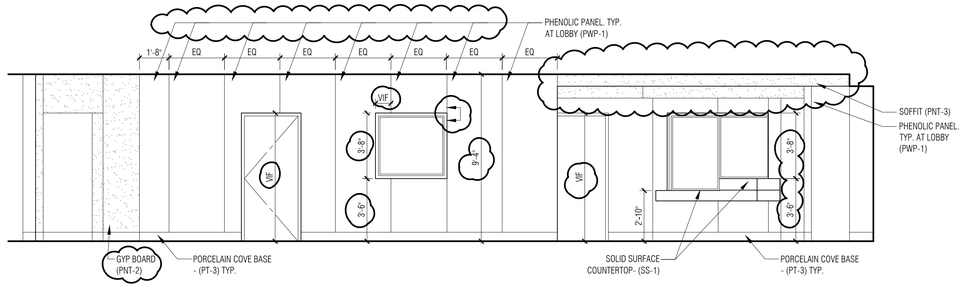

1 / A3-01 Lobby 101
1/4" = 1'-0"

P:\2021\21-130-Canton PSD – Interior Renovations\02_CAD\A8-01_Int Elevations.dwg - 3/18/2022 2:46:25 PM - Chris Jewett

PARTNERS

PARTNERS in Architecture, PLC
65 MARKET STREET
MOUNT CLEMENS, MI 48043
P 586.469.3600

Statement of Intellectual Property

The ideas, concepts, drawings and thoughts conveyed herein are the intellectual property of PARTNERS in Architecture, PLC, 65 Market Street, Mount Clemens, MI, 48043 (P 586.469.3600). This set of drawings, in whole or in part, may not be reproduced, without the written consent of PARTNERS in Architecture, PLC. This information is protected under U.S. Copyright Law, all rights reserved.

© Copyright 2022

THIS DRAWING IS NOT TO BE USED FOR CONSTRUCTION UNLESS ISSUED BELOW SPECIFICALLY FOR "BIDDING / CONSTRUCTION"

CONSULTANT

KEY PLAN

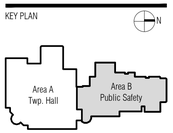

OWNER
Canton Township
Public Safety

PROJECT NAME
Public Safety Building
Interior Renovations

1150 S. Canton Center Road
Canton, MI 48188

PROJECT NO.
21-130

ISSUES / REVISIONS

SD-Owner Mtg	6/16/2021
SD-Owner Mtg	7/1/2021
SD Issue	9/20/2021
DD-Progress Review	10/12/2021
QAQC	2/18/2022
Bidding / Construction	3/9/2022
Addendum #1	3/18/2022

DRAWN BY
ASY, CJJ

CHECKED BY
JAV

APPROVED BY
MAM

SHEET NAME
INTERIOR ELEVATIONS

SHEET NO.
A8-01

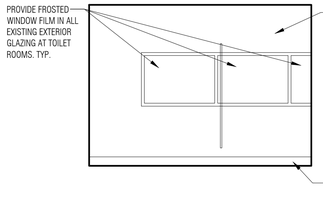

18 A3-03 Women's Restroom 234
1/4" = 1'-0"

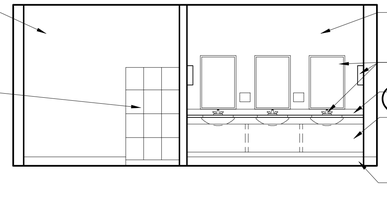

17 A3-03 Women's Restroom 234
1/4" = 1'-0"

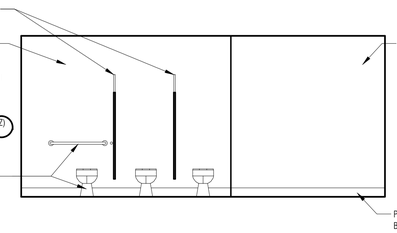

16 A3-03 Women's Restroom 234
1/4" = 1'-0"

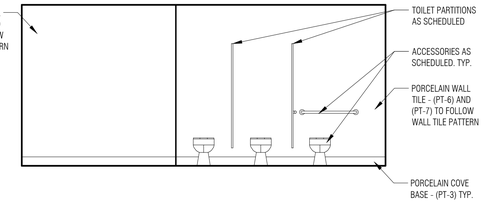

15 A3-03 Men's Restroom 232
1/4" = 1'-0"

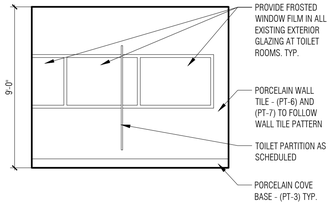

14 A3-03 Men's Restroom 232
1/4" = 1'-0"

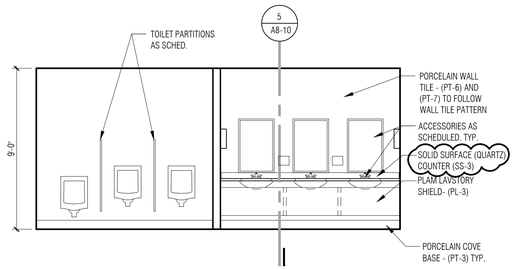

13 A3-03 Men's Restrooms 232
1/4" = 1'-0"

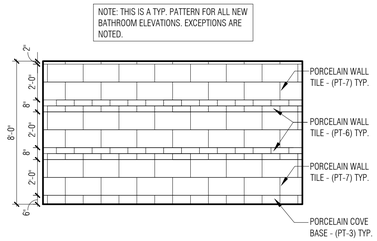

12 A8-01 A8-02 Typical Bathroom Tile Pattern
1/4" = 1'-0"

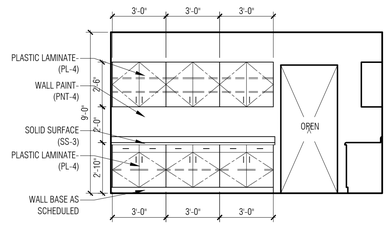

11 A3-03 Work Room 226
1/4" = 1'-0"

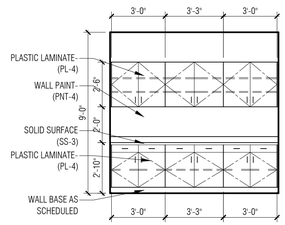

10 A3-03 Work Room 226
1/4" = 1'-0"

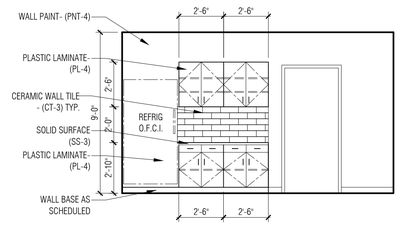

9 A3-03 Break Room 225
1/4" = 1'-0"

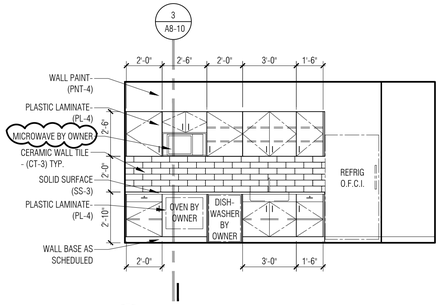

8 A3-03 Break Room 225
1/4" = 1'-0"

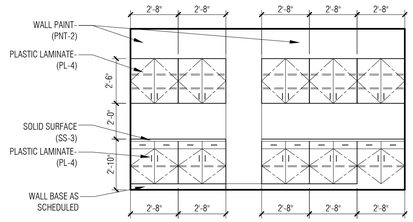

7 A3-02 Temp. Dispatch Mtg Room 213
1/4" = 1'-0"

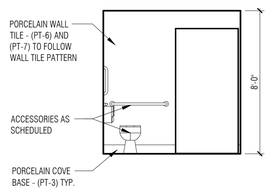

6 A3-03 Toilet 201
1/4" = 1'-0"

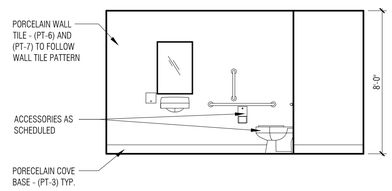

5 A3-03 Toilet 201
1/4" = 1'-0"

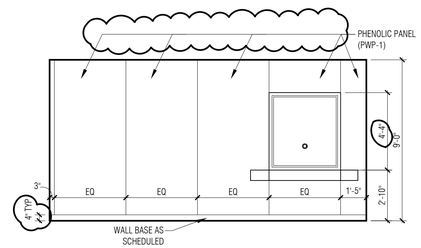

4 A3-02 Secure Lobby 200A
1/4" = 1'-0"

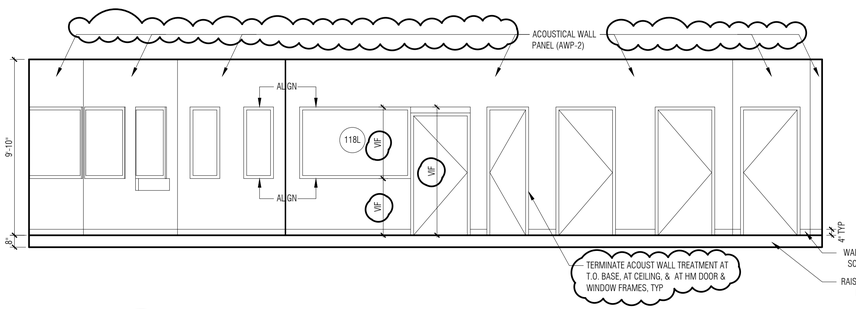

3 A3-03 Dispatch
1/4" = 1'-0"

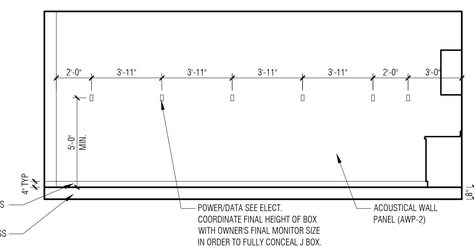

2 A3-03 Dispatch 118
1/4" = 1'-0"

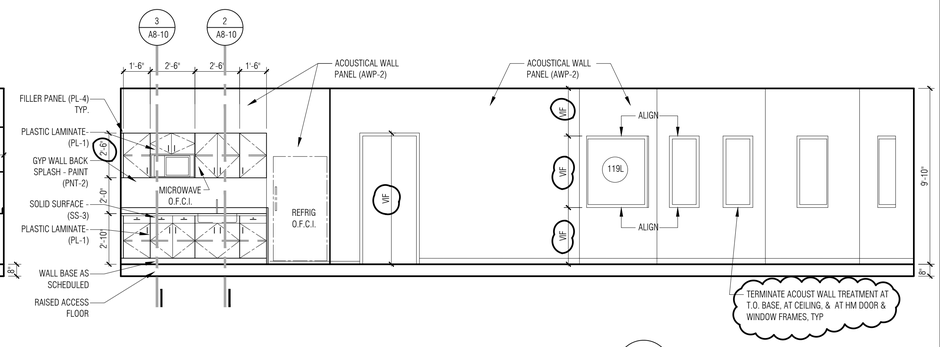

1 A3-03 Dispatch 118
1/4" = 1'-0"

P:\2021\21-130-Canton PSD – Interior Renovations\02_CAD\A8-02_Int Elevations.dwg - 3/18/2022 2:17:42 PM - Joe Valeri

PARTNERS

PARTNERS in Architecture, PLC
65 MARKET STREET
MOUNT CLEMENS, MI 48043
P 586.469.3600

Statement of Intellectual Property

The ideas, concepts, drawings and thoughts conveyed herein are the intellectual property of PARTNERS in Architecture, PLC, 65 Market Street, Mount Clemens, MI, 48043 (P 586.469.3600). This set of drawings, in whole or in part, may not be reproduced, without the written consent of PARTNERS in Architecture, PLC. This information is protected under U.S. Copyright Law, all rights reserved.

© Copyright 2022

THIS DRAWING IS NOT TO BE USED FOR CONSTRUCTION UNLESS ISSUED BELOW SPECIFICALLY FOR "BIDDING / CONSTRUCTION"

CONSULTANT

KEY PLAN

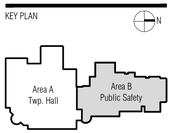

OWNER
Canton Township
Public Safety

PROJECT NAME
Public Safety Building
Interior Renovations

1150 S. Canton Center Road
Canton, MI 48188

PROJECT NO.
21-130

ISSUES / REVISIONS

SD-Owner Mtg	6/16/2021
SD-Owner Mtg	7/1/2021
SD Issue	9/20/2021
DD-Progress Review	10/12/2021
QAQC	2/18/2022
Bidding / Construction	3/9/2022
Addendum #1	3/18/2022

DRAWN BY
ASY

CHECKED BY
JAV

APPROVED BY
MAM

SHEET NAME
INTERIOR ELEVATIONS

SHEET NO.
A8-02

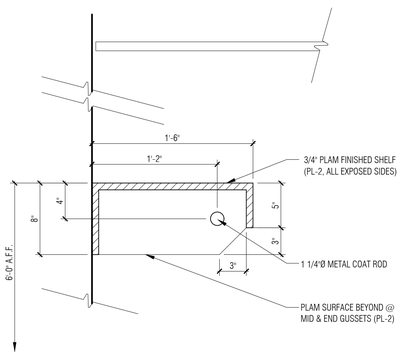

6 Typical Hanger Rod and Shelf Detail
1-1/2" = 1'-0"

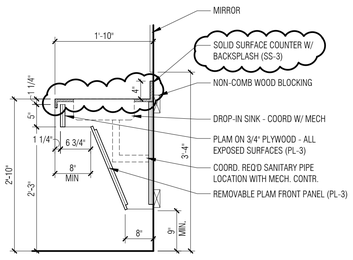

5 Typical Vanity Section
3/4" = 1'-0"

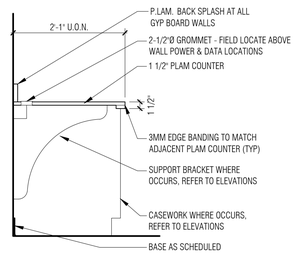

4 Typical Section @ Countertop
3/4" = 1'-0"

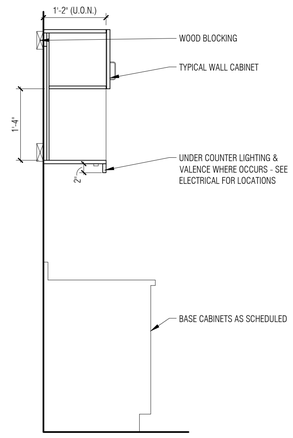

3 Microwave Cabinet Section
3/4" = 1'-0"

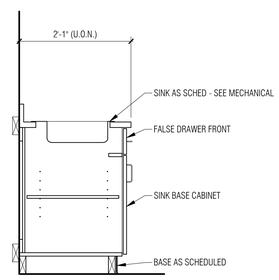

2 Sink Cabinet Section
3/4" = 1'-0"

SEE DETAIL 1 THIS SHEET FOR SIMILAR / TYPICAL NOTES & DIMENSIONS

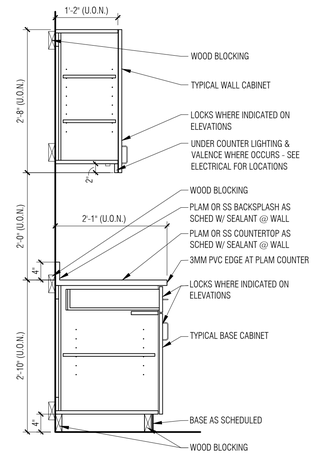

1 Typical Casework Section
3/4" = 1'-0"

PARTNERS

PARTNERS in Architecture, PLC
65 MARKET STREET
MOUNT CLEMENS, MI 48043
P 586.469.3600

Statement of Intellectual Property

The ideas, concepts, drawings and thoughts conveyed herein are the intellectual property of PARTNERS in Architecture, PLC, 65 Market Street, Mount Clemens, MI, 48043 (P 586.469.3600). This set of drawings, in whole or in part, may not be reproduced, without the written consent of PARTNERS in Architecture, PLC. This information is protected under U.S. Copyright Law, all rights reserved.

© Copyright 2022

THIS DRAWING IS NOT TO BE USED FOR CONSTRUCTION UNLESS ISSUED BELOW SPECIFICALLY FOR "BIDDING / CONSTRUCTION"

CONSULTANT

KEY PLAN

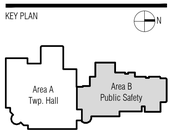

OWNER

Canton Township
Public Safety

PROJECT NAME

Public Safety Building
Interior Renovations

1150 S. Canton Center Road
Canton, MI 48188

PROJECT NO.

21-130

ISSUES / REVISIONS

SD-Owner Mtg	6/16/2021
SD-Owner Mtg	7/1/2021
SD Issue	9/20/2021
DD-Progress Review	10/12/2021
QAQC	2/18/2022
Bidding / Construction	3/9/2022
Addendum #1	3/18/2022

DRAWN BY
CJJ

CHECKED BY
JAV

APPROVED BY
MAM

SHEET NAME

MILLWORK DETAILS

SHEET NO.
A8-10

THE FOLLOWING DIMENSION EQUALS ONE INCH WHEN PRINTED TO SCALE. 1"

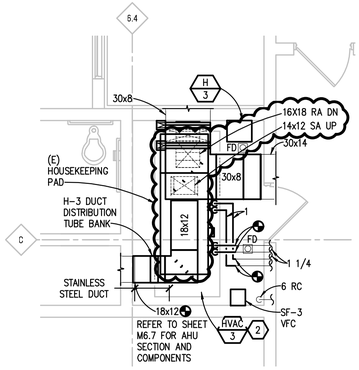

1 / M3.1,M4.1

FIRST FLOOR - MECHANICAL ENLARGED PLAN

SCALE: 1/4" = 1' - 0"

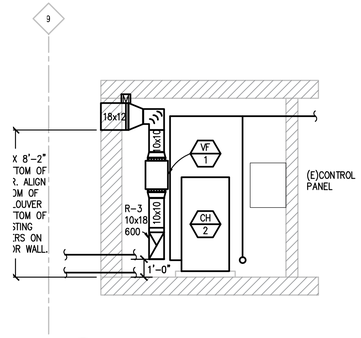

1 / M5.1

MECHANICAL SECTION 1

SCALE: 1/4" = 1' - 0"

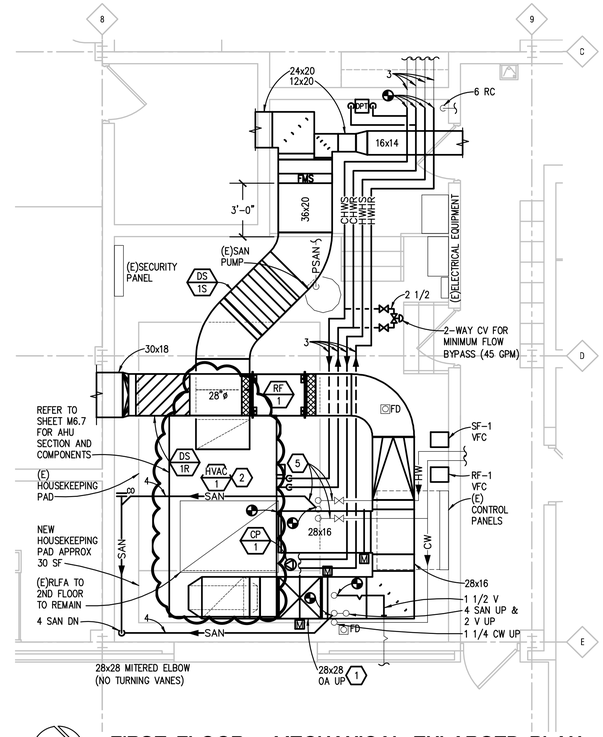

3 / M2.1,M3.1,M4.1

FIRST FLOOR - MECHANICAL ENLARGED PLAN

SCALE: 1/4" = 1' - 0"

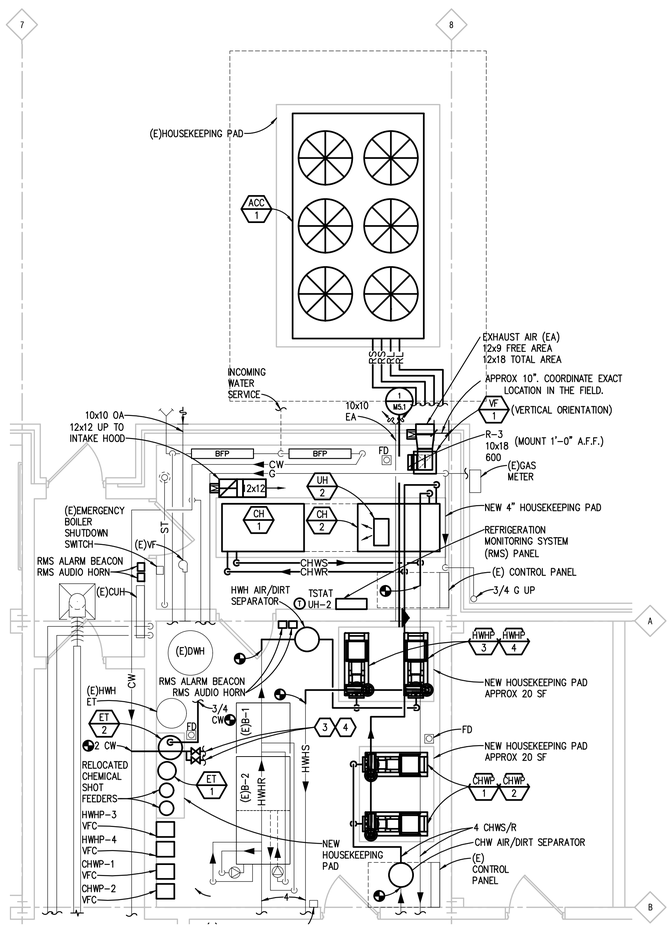

2 / M2.1,M3.1,M4.1

FIRST FLOOR - MECHANICAL ENLARGED PLAN

SCALE: 1/4" = 1' - 0"

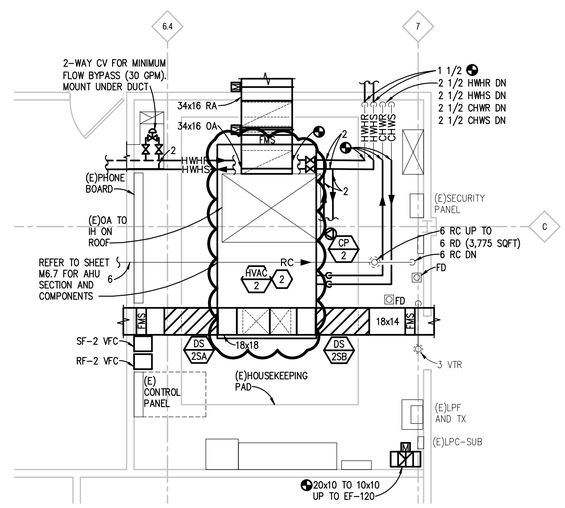

4 / M3.2,M4.2

SECOND FLOOR - MECHANICAL ENLARGED PLAN

SCALE: 1/4" = 1' - 0"

PLUMBING GENERAL NOTES:

1. THESE DRAWINGS ARE DIAGRAMMATIC, AND REPRESENT THE GENERAL INTENT AND ARRANGEMENT OF SYSTEMS. THEY ARE NOT TO BE CONSIDERED FABRICATION/COORDINATION/SHOP DRAWINGS. COORDINATION WITH OTHER TRADES IS REQUIRED. PROVIDE THE ADDITIONAL FITTINGS AND OFFSETS THAT WILL BE REQUIRED TO COMPLETE EACH SYSTEM AND TO AVOID INTERFERENCES WITH ALL OTHER SYSTEMS INCLUDING THE STRUCTURE, SHEET METAL, OTHER PIPING SYSTEMS, ELECTRICAL CONDUITS, BUS DUCTS, CABLE TRAY, LIGHT FIXTURES, ETC. AND/OR OTHER SPACE CONSTRAINTS.
2. INSTALL SYSTEMS SUCH THAT REQUIRED CLEARANCE AND SERVICE ACCESS SPACE IS PROVIDED AROUND ALL MECHANICAL AND ELECTRICAL EQUIPMENT, AND AROUND ANY COMPONENTS WHICH REQUIRE SERVICE ACCESS.
3. PIPING SHALL NOT BE INSTALLED ABOVE ELECTRICAL TRANSFORMERS, SWITCHBOARDS, PANELBOARDS OR MOTOR CONTROL CENTERS.
4. COORDINATE AND PROVIDE ACCESS DOORS WITHIN INACCESSIBLE CEILING, SHAFT, AND CHASE AREAS FOR ALL COMPONENTS WHICH REQUIRE SERVICE ACCESS. REFER TO ARCHITECTURAL DRAWINGS FOR CEILING TYPES.
5. PROVIDE SUPPLEMENTARY STEEL AS REQUIRED FOR THE PROPER SUPPORT OF ALL SYSTEMS.
6. REFER TO ARCHITECTURAL PLANS FOR DIMENSIONED LOCATIONS OF PLUMBING FIXTURES.
7. HOT AND COLD WATER PIPING RUN-OUTS TO LAVATORIES AND SINKS SHALL BE 1/2" UNLESS OTHERWISE NOTED.
8. PLUMBING VENT PIPING THROUGH ROOF SHALL BE LOCATED A MINIMUM OF 10'-0" FROM ANY FRESH AIR INTAKE LOCATION AND A MINIMUM OF 18" CLEAR FROM THE INSIDE FACE OF PARAPET.
9. PROVIDE CODE REQUIRED CLEARANCE FOR ALL CLEANOUTS INSTALLED IN SANITARY WASTE AND VENT PIPING.
10. MINIMUM UNDERGROUND PIPE SIZE SHALL BE 3".

HVAC PIPING GENERAL NOTES:

1. THESE DRAWINGS ARE DIAGRAMMATIC, AND REPRESENT THE GENERAL INTENT AND ARRANGEMENT OF SYSTEMS. THEY ARE NOT TO BE CONSIDERED FABRICATION/COORDINATION/SHOP DRAWINGS. COORDINATION WITH OTHER TRADES IS REQUIRED. PROVIDE THE ADDITIONAL FITTINGS AND OFFSETS THAT WILL BE REQUIRED TO COMPLETE EACH SYSTEM AND TO AVOID INTERFERENCES WITH ALL OTHER SYSTEMS INCLUDING THE STRUCTURE, SHEET METAL, OTHER PIPING SYSTEMS, ELECTRICAL CONDUITS, BUS DUCTS, CABLE TRAY, LIGHT FIXTURES, ETC. AND/OR OTHER SPACE CONSTRAINTS.
2. INSTALL SYSTEMS SUCH THAT REQUIRED CLEARANCE AND SERVICE ACCESS SPACE IS PROVIDED AROUND ALL MECHANICAL AND ELECTRICAL EQUIPMENT, AND AROUND ANY COMPONENTS WHICH REQUIRE SERVICE ACCESS.
3. PIPING AND DUCTWORK SHALL NOT BE INSTALLED ABOVE ELECTRICAL TRANSFORMERS, SWITCHBOARDS, PANELBOARDS OR MOTOR CONTROL CENTERS.
4. COORDINATE AND PROVIDE ACCESS DOORS WITHIN INACCESSIBLE CEILING, SHAFT, AND CHASE AREAS FOR ALL COMPONENTS WHICH REQUIRE SERVICE ACCESS. REFER TO ARCHITECTURAL DRAWINGS FOR CEILING TYPES.
5. PROVIDE SUPPLEMENTARY STEEL AS REQUIRED FOR THE PROPER SUPPORT OF ALL SYSTEMS.
6. SUBMIT PROPOSED METHODS OF ANCHORING AND GUIDING PIPING SYSTEMS TO STRUCTURAL ENGINEER FOR APPROVAL.
7. COORDINATE LOCATION OF DUCT-MOUNTED HYDRONIC DEVICES WITH SHEET METAL TRADES.
8. BRANCH PIPING SERVING TERMINAL UNIT HEATING COILS OR RADIANT CEILING PANELS SHALL BE 3/4" UNLESS OTHERWISE NOTED. BRANCH PIPING SERVING MORE THAN ONE TERMINAL UNIT HEATING COIL SHALL BE 1" UNLESS OTHERWISE NOTED. BRANCH PIPING SERVING HOT WATER UNIT HEATERS AND CABINET UNIT HEATERS SHALL BE 1" UNLESS OTHERWISE NOTED.
9. REFER TO TEMPERATURE CONTROLS STANDARD MOUNTING HEIGHTS DETAIL FOR ELEVATIONS OF WALL MOUNTED TEMPERATURE CONTROL DEVICES.

SHEET METAL GENERAL NOTES:

1. THESE DRAWINGS ARE DIAGRAMMATIC, AND REPRESENT THE GENERAL INTENT AND ARRANGEMENT OF SYSTEMS. THEY ARE NOT TO BE CONSIDERED FABRICATION/COORDINATION/SHOP DRAWINGS. COORDINATION WITH OTHER TRADES IS REQUIRED. PROVIDE THE ADDITIONAL FITTINGS AND OFFSETS THAT WILL BE REQUIRED TO COMPLETE EACH SYSTEM AND TO AVOID INTERFERENCES WITH ALL OTHER SYSTEMS INCLUDING THE STRUCTURE, PIPING SYSTEMS, ELECTRICAL CONDUITS, BUS DUCTS, CABLE TRAY, LIGHT FIXTURES, ETC. AND/OR OTHER SPACE CONSTRAINTS.
2. INSTALL SYSTEMS SUCH THAT REQUIRED CLEARANCE AND SERVICE ACCESS SPACE IS PROVIDED AROUND ALL MECHANICAL AND ELECTRICAL EQUIPMENT, AND AROUND ANY COMPONENTS WHICH REQUIRE SERVICE ACCESS.
3. PIPING AND DUCTWORK SHALL NOT BE INSTALLED ABOVE ELECTRICAL TRANSFORMERS, SWITCHBOARDS, PANELBOARDS OR MOTOR CONTROL CENTERS.
4. COORDINATE AND PROVIDE ACCESS DOORS WITHIN INACCESSIBLE CEILING, SHAFT, AND CHASE AREAS FOR ALL COMPONENTS WHICH REQUIRE SERVICE ACCESS. REFER TO ARCHITECTURAL DRAWINGS FOR CEILING TYPES.
5. PROVIDE SUPPLEMENTARY STEEL AS REQUIRED FOR THE PROPER SUPPORT OF ALL SYSTEMS.
6. REFER TO ARCHITECTURAL REFLECTED CEILING PLANS FOR DIMENSIONED LOCATION OF GRILLES, REGISTERS, AND DIFFUSERS.
7. REFER TO TEMPERATURE CONTROLS STANDARD MOUNTING HEIGHTS DETAIL FOR ELEVATIONS OF WALL MOUNTED TEMPERATURE CONTROL DEVICES.

CONSTRUCTION KEY NOTES:

1. INSTALL FLOW MEASURING STATION IN VERTICAL OUTSIDE AIR DUCT.
2. PROVIDE BI-POLAR IONIZATION FOR INDOOR AIR HANDLING UNIT AT SCHEDULED AIRFLOW. CIRCUIT TO NEAREST AVAILABLE 120V BRANCH CIRCUIT. PROVIDE CONDUIT AND WIRE AS REQUIRED.
3. 1 1/2 CW MAKE-UP FOR HOT WATER HEATING SYSTEM. REFER TO THE PIPING DIAGRAM ON SHEET M6.1.
4. 1 1/2 CW MAKE-UP FOR CHILLED WATER SYSTEM. REFER TO THE PIPING DIAGRAM ON SHEET M6.1.
5. EXISTING 1/2 CW, 1 1/2 SAN, AND 1/2 HW UP TO LAVATORY.
6. MODIFY AND EXTEND EXISTING SERVICES TO FACILITATE THE INSTALLATION OF NEW PLUMBING FIXTURE.
7. ROUTE 3/4 HW DOWN IN WALL. RUN HW PIPE THROUGH WALL AND CONNECT TO 3/4 HWR AT FURTHEST FIXTURE TO CREATE A CONTINOUS LOOP.

PARTNERS

PARTNERS in Architecture, PLC
65 MARKET STREET
MOUNT CLEMENS, MI 48043
P 586.469.3600

Statement of Intellectual Property

The ideas, concepts, drawings and thoughts conveyed herein are the intellectual property of PARTNERS in Architecture, PLC, 65 Market Street, Mount Clemens, MI, 48043 (P 586.469.3600). This set of drawings, in whole or in part, may not be reproduced, without the written consent of PARTNERS in Architecture, PLC. This information is protected under U.S. Copyright Law, all rights reserved.

© Copyright 2022

CONSULTANT

Peter Basso Associates Inc
CONSULTING ENGINEERS
5145 Livernois, Suite 100
Troy, Michigan 48098-3276
Tel: 248-879-5666
Fax: 248-879-0007
www.PeterBassoAssociates.com
PBA Project No: 2021.0163

KEY PLAN

OWNER

Canton Township
Public Safety

PROJECT NAME

Public Safety Building
Interior Renovations

1150 S. Canton Center Road
Canton, MI 48188

PROJECT NO.

21-130

ISSUES / REVISIONS

SD Issue	9/20/2021
Design Development	10/29/2021
Pricing Set	01/19/2022
95% Review	02/02/2022
QAQC	02/18/2022
Bidding / Construction	03/09/2022
Addendum 01	03/18/2022

DRAWN BY
MDR

CHECKED BY
DAC

APPROVED BY
DAC

SHEET NAME
MECHANICAL ENLARGED PLAN

SHEET NO.
M5.1

\\pba.local\projects\2021\2021-0163-00\CAD\2021-0163-M5-EP.dwg, M5.1, 3/17/2022 4:28:30 PM, Suha A. Matti, Peter Basso Associates Inc.

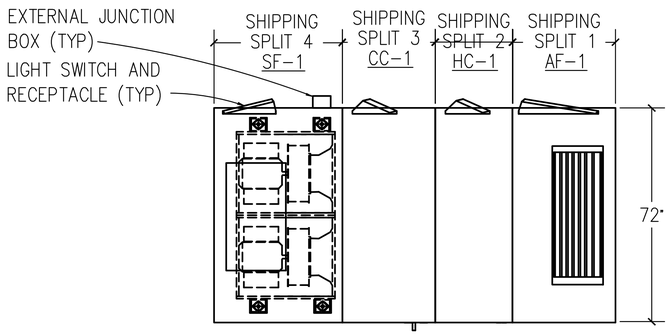

PLAN

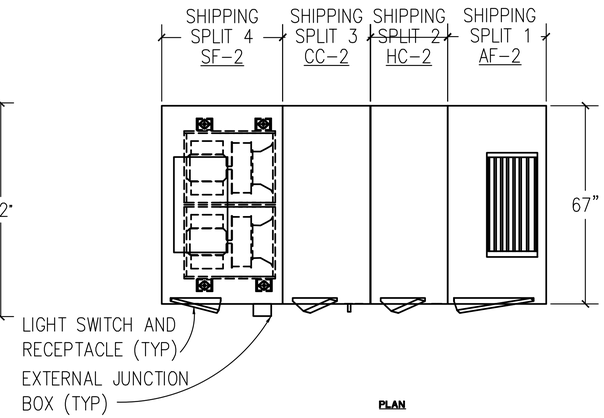

PLAN

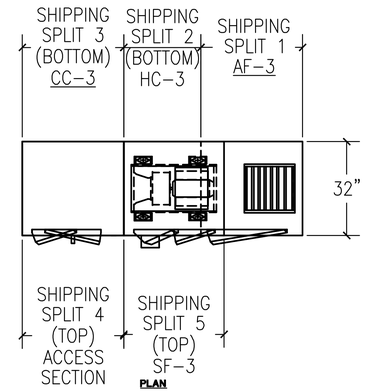

PLAN

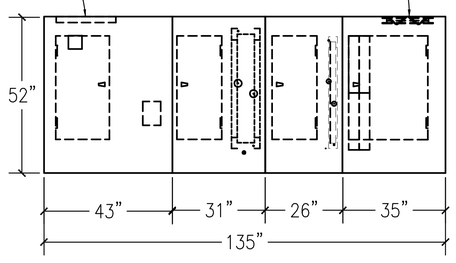

SECTION

HVAC-1 DETAILS

NO SCALE

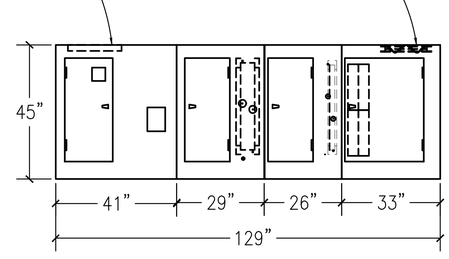

SECTION

HVAC-2 DETAILS

NO SCALE

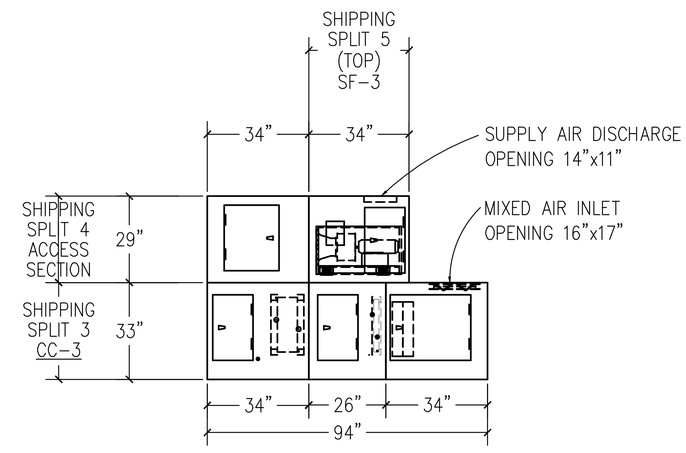

SECTION

HVAC-3 DETAILS

NO SCALE

PARTNERS

PARTNERS in Architecture, PLC
65 MARKET STREET
MOUNT CLEMENS, MI 48043
P 586.469.3600

Statement of Intellectual Property

The ideas, concepts, drawings and thoughts conveyed herein are the intellectual property of PARTNERS in Architecture, PLC, 65 Market Street, Mount Clemens, MI, 48043 (P 586.469.3600). This set of drawings, in whole or in part, may not be reproduced, without the written consent of PARTNERS in Architecture, PLC. This information is protected under U.S. Copyright Law, all rights reserved.

© Copyright 2022

CONSULTANT

Peter Basso Associates Inc
CONSULTING ENGINEERS
5145 Livernois, Suite 100
Troy, Michigan 48098-3276
Tel: 248-879-5666
Fax: 248-879-0007
www.PeterBassoAssociates.com
PBA Project No. 2021.0163

KEY PLAN

OWNER

Canton Township
Public Safety

PROJECT NAME

Public Safety Building
Interior Renovations

1150 S. Canton Center Road
Canton, MI 48188

PROJECT NO.

21-130

ISSUES / REVISIONS

SD Issue	9/20/2021
Design Development	10/29/2021
Pricing Set	01/19/2022
95% Review	02/02/2022
QAQC	02/18/2022
Bidding / Construction	03/09/2022
Addendum 01	03/18/2022

DRAWN BY

.

CHECKED BY

.

APPROVED BY

SHEET NAME

AHU DETAILS

SHEET NO.

M6.7

\\pba.local\projects\2021\2021-0163-00\CAD\2021-0163-M6-DT.dwg, M6.7, 3/17/2022 2:02:16 PM, Suha A. Matti, Peter Basso Associates Inc.

SCHEDULES GENERAL NOTES:

TYPICAL FOR ALL SCHEDULE SHEETS:

1. REFER TO ELECTRICAL STANDARD SCHEDULES, ONE LINE DIAGRAM AND PANEL SCHEDULES FOR ADDITIONAL ELECTRICAL INFORMATION

2. PROVIDE THE FOLLOWING FACTORY-WIRED ELECTRICAL OPTIONS/ACCESSORIES WHERE INDICATED IN SCHEDULE:

   A – NON-FUSED DISCONNECT SWITCH
   B – UNIT SHALL BE SINGLE POINT ELECTRICAL CONNECTION WITH FACTORY INSTALLED DISCONNECTING MEANS AND ALL REQUIRED STARTERS AND CONTROLS
   C – SERVICE RECEPTACLE
   D – FUSED DISCONNECT SWITCH
   E – COMBINATION STARTER
   F – UNIT SHALL HAVE (2) SINGLE POINT CONNECTIONS WITH FACTORY INSTALLED DISCONNECTING MEANS AND ALL REQUIRED STARTERS AND CONTROLS. (1) CONNECTION SHALL BE FOR CONDENSING SECTION AND (1) CONNECTION SHALL BE FOR THE REMAINDER OF THE UNIT.

3. FOR MODULATION/CONTROL TYPE COLUMN, "VFC" INDICATES VARIABLE FREQUENCY CONTROLLERS, "AUTO" INDICATES AUTOMATIC OPERATION (CONTROLLED BY TEMPERATURE CONTROLS OR SELF CONTAINED CONTROLS), "MANUAL" INDICATES HAND OPERATION.

4. IF VARIABLE FREQUENCY CONTROLLERS ARE INDICATED TO BE PROVIDED AND ARE NOT INSTALLED INTEGRAL TO THE UNIT, VARIABLE FREQUENCY CONTROLLERS SHALL BE SUPPLIED BY THE MECHANICAL CONTRACTOR (UNLESS OTHERWISE NOTED) AND INSTALLED BY THE ELECTRICAL CONTRACTOR INCLUDING THE LINE SIDE AND LOAD SIDE WIRING TO THE MOTOR AND INCLUDING MISCELLANEOUS STEEL REQUIRED FOR THE SUPPORT AND MOUNTING OF THE VFC. REFER TO FLOOR PLANS FOR LOCATION.

5. WHERE EQUIPMENT IS INDICATED TO HAVE A SINGLE POINT ELECTRICAL CONNECTION, THAT EQUIPMENT SHALL COME COMPLETE WITH FACTORY INSTALLED STARTERS, MOTOR OVERLOAD PROTECTION, CONTACTORS, FUSING AND ALL NECESSARY INTERNAL WIRING AND CONTROLS. PROVIDE A FACTORY MOUNTED UNIT DISCONNECTING MEANS WHERE THE ELECTRICAL CONTRACTOR SHALL MAKE SINGLE POINT CONNECTION. INSTALL PACKAGED EQUIPMENT SUCH THAT THE ELECTRICAL CONNECTION AND CONTROLS ARE ACCESSIBLE AND HAVE CLEARANCES MEETING THE NATIONAL ELECTRICAL CODE.

6. WHERE PACKAGED EQUIPMENT IS PROVIDED, NAMEPLATE MUST INDICATE MAXIMUM OVERCURRENT PROTECTION BY HACR RATED CIRCUIT BREAKERS OR FUSES. IF FUSE PROTECTION ONLY IS INDICATED, PROVIDE A FUSIBLE DISCONNECT AND FUSES WITH THE UNIT.

7. WHERE EQUIPMENT IS DESIGNATED BY MANUFACTURER AND MODEL NUMBER, THIS IS THE BASIS OF DESIGN. IF THE CONTRACTOR ELECTS TO PROVIDE EQUIPMENT BY OTHER SPECIFIED MANUFACTURERS OR PROPOSED ALTERNATE EQUIPMENT BY THE BASIS OF DESIGN MANUFACTURER, THE CONTRACTOR SHALL BE RESPONSIBLE FOR ANY REVISIONS TO ELECTRICAL REQUIREMENTS, STRUCTURAL LOADING, OR ARCHITECTURAL APPURTENANCES AND SHALL INCLUDE THE COST OF SUCH REVISIONS IN HIS BID.

8. WHERE EQUIPMENT IS SCHEDULED TO INCLUDE A SERVICE RECEPTACLE, PROVIDE A FACTORY MOUNTED SERVICE RECEPTACLE WITH APPROPRIATE FUSES AND TRANSFORMERS CONNECTED ON THE LINE SIDE OF THE UNIT DISCONNECT. PROVIDE A NAMEPLATE ON THE DISCONNECT SWITCH INDICATING THE PRESENCE OF LIVE POWER TO THE SERVICE RECEPTACLE WHEN THE UNIT DISCONNECT IS IN THE OFF POSITION.

9. SIZE ALL EQUIPMENT FEEDERS BASED ON THE LISTED MOP (MAXIMUM OVERCURRENT PROTECTION). REFER TO THE FEEDER AND BRANCH CIRCUIT SIZING SCHEDULE ON THE ELECTRICAL STANDARD SCHEDULES SHEET.

MODULAR AIR HANDLING UNIT COMPONENT SCHEDULE

UNIT IDENTIFICATION	POSITION NUMBER 1	POSITION NUMBER 2	POSITION NUMBER 3	POSITION NUMBER 4	POSITION NUMBER 5	POSITION NUMBER 6	POSITION NUMBER 7	POSITION NUMBER 8	POSITION NUMBER 9	MAXIMUM UNIT LENGTH (INCHES)	MAXIMUM UNIT WIDTH (INCHES)	MAXIMUM UNIT HEIGHT (INCHES)	MODEL NUMBER	KEYED NOTES
HVAC-1	MIXING BOX	AF-1	HC-1	ACCESS	CC-1	ACCESS	SF-1	---	---	135	72	53	CSAA017	1, 2
HVAC-2	MIXING BOX	AF-2	HC-2	ACCESS	CC-2	ACCESS	SF-2	---	---	129	67	45	CSAA012	1, 2
HVAC-3	MIXING BOX	AF-3	HC-3	ACCESS	CC-3	ACCESS	SF-3	---	---	94	32	62	CSAA003	1, 2

GENERAL NOTES:
1. MODULES SELECTED BASED ON TRANE INDOOR MODULAR CLIMATE CHANGER AIR HANDLING UNIT.
2. POSITION NUMBERS ARE INDICATED IN THE DIRECTION OF AIRFLOW FROM RETURN AIR INLET TO SUPPLY AIR DISCHARGE.

KEYED NOTES:
1. PROVIDE BIPOLAR IONIZATION WITH AIRFLOW SWITCH OPTION.
2. MECHANICAL CONTRACTOR SHALL COORDINATE SHIPPING SPLITS AND SIZES TO ENSURE NEW AIR HANDLING SECTIONS CAN FIT THROUGH ACCESS POINTS.

AIR HANDLING UNIT FILTER SCHEDULE

UNIT I.D.	SYSTEM SERVED	TYPE (NOTE 2)	AIRFLOW CFM	AIR PRESS. DROP		EFFICIENCIES		FILTER MEDIA						MODEL NO.	KEYED NOTES
				INITIAL IN. W.G.	DIRTY IN. W.G.	MERV	D.S. %	QUAN.	WIDTH IN.	HEIGHT IN.	DEPTH IN.	MIN. MEDIA FACE AREA SQ. FT.	ACCESS TYPE		
AF-1	HVAC-1	4" CARTRIDGE	8000	0.50	1.40	13	85	6	(6)20	(2)20, (4)24	(6)4	18.9	REMOVABLE	CSAA017	
AF-2	HVAC-2	4" CARTRIDGE	5500	0.50	1.40	13	85	6	(6)16	(6)20	(6)4	13.4	REMOVABLE	CSAA012	
AF-3	HVAC-3	4" CARTRIDGE	1300	0.50	1.40	13	85	1	20	25	4	3.5	REMOVABLE	CSAA003	

GENERAL NOTES:
1. MODEL NUMBERS ARE TRANE UNLESS OTHERWISE NOTED.
2. PROVIDE 25% TO 30% EFFICIENT 2 INCH THROW AWAY PREFILTERS
3. MERV DESIGNATES THE "MINIMUM EFFICIENCY REPORTING VALUE" AS EVALUATED UNDER ASHRAE STANDARD 52.2 1999.
4. AIR HANDLING UNIT TOTAL STATIC PRESSURE FOR VARIABLE AIR VOLUME SYSTEMS IS BASED ON THE FILTER DIRTY AIR PRESSURE DROP AND AVERAGE/MIDLIFE FILTER AIR PRESSURE DROP FOR CONSTANT VOLUME SYSTEMS UNLESS NOTED OTHERWISE.

HOT WATER HEATING COIL SCHEDULE

UNIT IDENTIFICATION	SYSTEM SERVED	MAXIMUM NUMBER ROWS	MAXIMUM FIN DENSITY FINS/INCH	CAPACITY MBH	AIR				MINIMUM FACE AREA SQ. FT.	WATER					CONTROL VALVE W.P.D. FT. HD.	MODEL NUMBER	KEYED NOTES
					AIRFLOW CFM	E.D.B. °F	L.D.B. °F	MAXIMUM A.P.D. IN. W.G.		FLOW GPM	FLUID TYPE	E.W.T. °F	L.W.T. °F	MAXIMUM W.P.D. FT. HEAD			
HC-1	HVAC-1	2	10	245.4	4400	8.6	60.0	0.10	15.0	24.5	W	180	160	5	15	HOT WATER – 5W	
HC-2	HVAC-2	2	10	65.4	2500	35.9	60.0	0.10	11.2	6.6	W	180	160	5	15	HOT WATER – 5W	
HC-3	HVAC-3	2	10	43.1	1300	59.4	90.0	0.12	2.5	4.3	W	180	160	5	15	HOT WATER – 5W	
HC-10	RTU-10	2	10	129.0	3750	28.3	60.0	0.25	8.5	12.9	W	180	160	5	15	5WC-2-18x68x1-7AL	1
HC-11	RTU-11	2	10	126.0	3000	63.8	102.5	0.24	4.4	12.6	W	180	160	5	15	5WC-4-15x42x2-7AL	1
HC-12	RTU-12	2	10	23.6	1600	46.4	60.0	0.24	2.9	1.6	W	180	150	5	15	5WC-10-15x28x1-6AL	1

GENERAL NOTES:
1. MODEL NUMBERS ARE TRANE UNLESS OTHERWISE NOTED.
2. COIL SELECTION BASED ON .00025 FOULING FACTOR.
3. FLUID TYPE: W = WATER

KEYED NOTES:
1. MODEL NUMBERS ARE NORTEK AIR SOLUTIONS – TEMTROL.

PACKAGED ELECTRIC STEAM GENERATOR/HUMIDIFIER SCHEDULE

UNIT IDENTIFICATION	SYSTEM SERVED	STEAM GENERATOR/CONTROL PACKAGE			DUCT DISTRIBUTION TUBE BANK							MODULATION/ CONTROL TYPE	ELECTRICAL					
		FLOW LBS/HR	TYPE	MODEL	TYPE	MODEL LBS/HR	DUCT AIR TEMPERATURE °F	DUCT WIDTH INCHES	DUCT HEIGHT INCHES	MINIMUM ABSORPTION DISTANCE INCHES	MODEL		VOLTS	PHASE	MCA	MOP	SCCR KA	OPTIONS/ ACCESSORIES
H-3	HVAC-3	6.3	ELECTRODE STEAM	EL 010	STAINLESS STEEL	6.3	55	18	12	24	ASD 18	AUTO	208	1	18	25	10	---

GENERAL NOTES:
1. REFER TO SCHEDULES GENERAL NOTES.
2. MODEL NUMBERS ARE CONDAIR UNLESS OTHERWISE NOTED.

CHILLED WATER COOLING COIL SCHEDULE

UNIT IDENTIFICATION	SYSTEM SERVED	MAXIMUM NUMBER ROWS	MAXIMUM FIN DENSITY FINS/INCH	TOTAL CAPACITY MBH	AIR						MINIMUM FACE AREA SQ. FT.	WATER					CONTROL VALVE W.P.D. FT. HEAD	MODEL NUMBER
					AIRFLOW CFM	E.D.B. °F	E.W.B. °F	L.D.B. °F	L.W.B. °F	MAXIMUM A.P.D. IN. W.G.		FLOW GPM	FLUID TYPE	E.W.T. °F	L.W.T. °F	MAXIMUM W.P.D. FT. HEAD		
CC-1	HVAC-1	6	12	394.8	8000	82.2	68.3	52.4	52.3	0.92	16.8	78.7	W	45	55	9.2	15	CHILLED WATER – 3U
CC-2	HVAC-2	6	11	185.6	5500	78.2	64.0	52.7	52.5	0.70	12.1	37.0	W	45	55	3.2	15	CHILLED WATER – 3U
CC-3	HVAC-3	6	10	43.1	1300	77.4	63.8	52.9	52.4	0.60	2.9	8.6	W	45	55	2.3	15	CHILLED WATER – 3W

GENERAL NOTES:
1. MODEL NUMBERS ARE TRANE UNLESS OTHERWISE NOTED.
2. COIL SELECTIONS BASED ON .00025 FOULING FACTOR.
3. FLUID TYPE: W = WATER

AIR HANDLING UNIT SUPPLY AIR FAN SCHEDULE

UNIT IDENTIFICATION	SYSTEM SERVED	TYPE	AIRFLOW CFM	MINIMUM OUTSIDE AIR FLOW CFM	E.S.P. IN. W.G.	SUCTION OR DISCHARGE S.P. IN. W.C. AT COOLING COIL DRAIN PAN	T.S.P. IN. W.G.	RPM	OUTLET VELOCITY FPM	FAN CLASS	MOTOR			MODULATION/ CONTROL TYPE	ELECTRICAL						MODEL NUMBER	KEYED NOTES
											BHP	HP	DRIVE TYPE		VOLTS	PHASE	MCA	MOP	SCCR KA (NOTE 5)	OPTIONS/ ACCESSORIES		

MAXIMUM SOUND POWER LEVELS

UNIT IDENTIFICATION	UNIT DISCHARGE Lw BY OCTAVE BAND								UNIT INLET Lw BY OCTAVE BAND								CASING RADIATED Lw BY OCTAVE BAND							
	63 HZ (DB)	125 HZ (DB)	250 HZ (DB)	500 HZ (DB)	1000 HZ (DB)	2000 HZ (DB)	4000 HZ (DB)	8000 HZ (DB)	63 HZ (DB)	125 HZ (DB)	250 HZ (DB)	500 HZ (DB)	1000 HZ (DB)	2000 HZ (DB)	4000 HZ (DB)	8000 HZ (DB)	63 HZ (DB)	125 HZ (DB)	250 HZ (DB)	500 HZ (DB)	1000 HZ (DB)	2000 HZ (DB)	4000 HZ (DB)	8000 HZ (DB)
SF-1	85	81	81	88	83	84	80	71	76	76	75	77	71	74	69	61	83	80	76	80	78	63	54	43
SF-2	75	85	78	86	78	79	80	75	75	73	73	80	70	71	69	64	80	75	74	84	72	58	55	47
SF-3	85	83	87	86	78	76	73	76	78	74	74	71	73	63	61	65	85	75	80	77	74	55	48	43

UNIT IDENTIFICATION	SYSTEM SERVED	TYPE	AIRFLOW CFM	MINIMUM OUTSIDE AIR FLOW CFM	E.S.P. IN. W.G.	SUCTION OR DISCHARGE S.P. IN. W.C. AT COOLING COIL DRAIN PAN	T.S.P. IN. W.G.	RPM	OUTLET VELOCITY FPM	FAN CLASS	MOTOR BHP	MOTOR HP	MOTOR DRIVE TYPE	MODULATION/ CONTROL TYPE	VOLTS	PHASE	MCA	MOP	SCCR KA (NOTE 5)	OPTIONS/ ACCESSORIES	MODEL NUMBER	KEYED NOTES
SF-1	HVAC-1	PLENUM	8000	3400	1.50	-2.1	4.90	2904	1600	I	10.2	15	DIRECT	VFC	480	3	27.6	40	10	B	CSAA017	1, 2
SF-2	HVAC-2	PLENUM	5500	1100	1.50	-2.1	4.58	3290	1375	I	6.1	10	DIRECT	VFC	480	3	18.9	30	10	B	CSAA012	1, 2
SF-3	HVAC-3	PLENUM	1300	200	1.25	-2.2	4.06	4541	1216	I	1.65	2	DIRECT	VFC	480	3	3.13	15	10	B	CSAA003	1

GENERAL NOTES:
1. REFER TO SCHEDULES GENERAL NOTES.
2. MODEL NUMBERS ARE TRANE UNLESS OTHERWISE NOTED.
3. DESIGN MINIMUM OUTSIDE AIRFLOW CFM (VENTILATION) LISTED IS BASED ON THE ESTIMATED MAXIMUM OCCUPANT LOAD. REFER TO TEMPERATURE CONTROL DRAWINGS FOR OUTSIDE AIR CONTROL SEQUENCE.
4. REFER TO AIR HANDLING UNIT FILTER SCHEDULE FOR AIR PRESSURE DROP TO BE USED FOR TOTAL STATIC PRESSURE CALCULATIONS.
5. CONTROLLER (E.G. VARIABLE FREQUENCY CONTROLLER, MOTOR STARTER) FOR SPECIFIED EQUIPMENT SHALL BE MANUFACTURED AND MARKED PER NEC WITH A MINIMUM SHORT CIRCUIT CURRENT RATING AS INDICATED.

KEYED NOTES:
1. PROVIDE AIR HANDLING UNIT WITH INTEGRAL LIGHTS AND SWITCH (120V CIRCUIT PROVIDED BY ELECTRICAL CONTRACTOR). PROVIDE AIR HANDLING UNIT WITH A GENERAL SERVICE RECEPTACLE (120V CIRCUIT PROVIDED BY ELECTRICAL CONTRACTOR).
2. SUPPLY FAN IS SET UP AS A 1 ROW, 2 FAN ARRAY. THE SCHEDULED BHP AND HP VALUES ARE THE TOTAL BRAKE HORSEPOWERS AND THE TOTAL NAMEPLATE HORSEPOWERS RESPECTIVELY.

PARTNERS

PARTNERS in Architecture, PLC
65 MARKET STREET
MOUNT CLEMENS, MI 48043
P 586.469.3600

Statement of Intellectual Property

The ideas, concepts, drawings and thoughts conveyed herein are the intellectual property of PARTNERS in Architecture, PLC, 65 Market Street, Mount Clemens, MI, 48043 (P 586.469.3600). This set of drawings, in whole or in part, may not be reproduced, without the written consent of PARTNERS in Architecture, PLC. This information is protected under U.S. Copyright Law, all rights reserved.

© Copyright 2022

CONSULTANT

Peter Basso Associates Inc
CONSULTING ENGINEERS
5145 Livernois, Suite 100
Troy, Michigan 48098-3276
Tel: 248-879-5666
Fax: 248-879-0007
www.PeterBassoAssociates.com
PBA Project No. 2021.0163

KEY PLAN

OWNER

Canton Township
Public Safety

PROJECT NAME

Public Safety Building
Interior Renovations

1150 S. Canton Center Road
Canton, MI 48188

PROJECT NO.

21-130

ISSUES / REVISIONS

SD Issue	9/20/2021
Design Development	10/29/2021
Pricing Set	01/19/2022
95% Review	02/02/2022
QAQC	02/18/2022
Bidding / Construction	03/09/2022
Addendum 01	03/18/2022

DRAWN BY
MDR

CHECKED BY
DAC

APPROVED BY
DAC

SHEET NAME
MECHANICAL SCHEDULES

SHEET NO.
M7.4

\\pba.local\projects\2021\2021-0163-00\CAD\2021-0163-M7-SH4.dwg, M7.4, 3/17/2022 2:02:22 PM, Suha A. Matti, Peter Basso Associates Inc.

SPLIT SYSTEM AIR CONDITIONING UNIT SCHEDULE

INDOOR UNIT														OUTDOOR UNIT												
UNIT IDENTIFICATION	AREA SERVED	TOTAL CAPACITY MBH	EVAPORATOR FAN		COOLING COIL			ELECTRICAL					MODEL NUMBER	UNIT IDENTIFICATION	CONDENSING SECTION				MODULATION/ CONTROL TYPE	ELECTRICAL						MODEL NUMBER	KEYED NOTES
			AIRFLOW CFM	NUMBER FANS	E.D.B. °F	E.W.B. °F	MINIMUM FACE AREA SQ. FT.	VOLTS	PHASE	MCA	MOP	SCCR KA			NUMBER OF COMPRESSORS	NUMBER OF CONTROL STAGES	AMBIENT TEMPERTURE °F	AIRFLOW CFM		VOLTS	PHASE	MCA	MOP	SCCR KA	OPTIONS/ ACCESSORIES		
ACU-102	DISPATCH (BACK-UP)	24	610	1	80	67	3.6	208	1	---	35	10	40MBCQ24--3	ACCU-102	1	MODULATING	95	2235	AUTO	208	1	25	35	10	---	38MARBQ24AA3	1, 2, 3
ACU-103	DISPATCH (BACK-UP)	24	610	1	80	67	3.6	208	1	---	35	10	40MBCQ24--3	ACCU-103	1	MODULATING	95	2235	AUTO	208	1	25	35	10	---	38MARBQ24AA3	1, 2, 3
ACU-201	IT ROOM	24	870	1	80	67	3.6	208	1	0.4	30	10	40MAHBQ24XA3	ACCU-201	1	MODULATING	95	2300	AUTO	208	1	25	35	10	---	38MAQB24R--3	1, 2, 3
ACU-202	COMPUTER ROOM	24	610	1	80	67	3.6	208	1	---	35	10	40MBCQ24--3	ACCU-202	1	MODULATING	95	2235	AUTO	208	1	25	35	10	---	38MARBQ24AA3	1, 2, 3

GENERAL NOTES:
1. REFER TO SCHEDULES GENERAL NOTES.
2. MODEL NUMBERS CARRIER UNLESS OTHERWISE NOTED. UNITS HAVE HEATING CAPABILITY.

KEYED NOTES:
1. INDOOR UNIT POWER FEED THROUGH OUTDOOR UNIT.
2. UNITS SHALL BE CAPABLE OF OPERATING DOWN TO 0 DEG. F.
3. PROVIDE PLENUM RATED CONDENSATE PUMP.

INTAKE HOOD SCHEDULE

UNIT IDENTIFICATION	SYSTEM SERVED	CFM	THROAT SIZE INCHES	HOOD INTAKE VELOCITY FPM	THROAT VELOCITY FPM	STATIC PRESSURE DROP IN. W.G.	HOOD SIZE			CURB HEIGHT INCHES	HOOD CONSTRUCTION	MODEL NUMBER	KEYED NOTES
							WIDTH INCHES	LENGTH INCHES	HEIGHT INCHES				
IH-1	VF-1	600	12x12	297	600	.047	26	27	14	18	GALVANIZED	FGI	

GENERAL NOTES:
1. MODEL NUMBERS ARE GREENHECK UNLESS OTHERWISE NOTED.
2. PROVIDE WITH BIRD SCREEN.

AIR & DIRT SEPARATOR SCHEDULE

INLET/OUTLET PIPE SIZE (INCHES)	MAX SYSTEM FLOW (GPM)	MAX PRESSURE DROP CLEAN (FT HD)	BUNDLE REMOVAL CLEARANCE NOTE 3 (INCHES)	OPERATING WEIGHT (LBS)	TYPE	MODEL NUMBER	KEYED NOTES
4	220	1.10	16	250	STANDARD VELOCITY / AIR & DIRT	VDN 400 FA	

GENERAL NOTES:
1. MODEL NUMBERS ARE SPIROTHERM UNLESS OTHERWISE NOTED.
2. SEPARATOR FLANGE CONNECTION MUST BE A MINIMUM OF THE PIPE DIAMETER SIZE OF WHICH THE SEPARATOR IS INSTALLED.
3. MINIMUM BUNDLE REMOVAL CLEARANCE IS MEASURED FROM CENTERLINE OF INLET/OUTLET PIPING. PROVIDE CLEARANCE BELOW UNIT TO DIMENSION LISTED TO ALLOW REMOVAL OF HEAD AND ELEMENT BUNDLE.
4. REFER TO PUMP SCHEDULE FOR SYSTEM FLOW.

DUCT SILENCER SCHEDULE

UNIT IDENTIFICATION	SYSTEM SERVED	AIRFLOW CFM	MAX A.P.D. IN. W.G.	VELOCITY AT DIL RATING FPM	DYNAMIC INSERTION LOSS (DIL) dB								DUCT DIMENSIONS		SILENCER LENGTH	CONSTRUCTION					MODEL NUMBER
					63	125	250	500	1K	2K	4K	8K	W INCHES	H INCHES	L INCHES	TYPE	OUTER CASING TYPE	FILL MATERIAL	LINER	CASING MATERIAL	
DS-1R	HVAC-1 RA	4600	0.09	1076	4	7	13	25	33	28	18	14	28ø	---	36	CS	STANDARD	FIBERGLASS	22 GA GALVANIZED	18 GA GALVANIZED	CS
DS-1S	HVAC-1 SA	8000	0.13	1600	5	7	10	15	12	10	9	7	36	20	36	RS	STANDARD	FIBERGLASS	22 GA GALVANIZED	18 GA GALVANIZED	RH36/WB
DS-2R	HVAC-2 RA	4400	0.09	1165	11	15	20	29	31	28	24	20	34	16	86	RE	STANDARD	FIBERGLASS	22 GA GALVANIZED	18 GA GALVANIZED	ERM86/VA
DS-2SA	HVAC-2 SA	3500	0.10	1556	4	6	11	19	20	16	13	10	18	18	36	RS	STANDARD	FIBERGLASS	22 GA GALVANIZED	18 GA GALVANIZED	RH36/3B
DS-2SB	HVAC-2 SA	2300	0.11	1314	4	7	11	21	21	16	14	12	18	14	36	RS	STANDARD	FIBERGLASS	22 GA GALVANIZED	18 GA GALVANIZED	RH36/3B
DS-10R	RTU-10 RA	8500	0.10	1159	7	11	20	26	32	31	26	22	24	44	48	RE	STANDARD	FIBERGLASS	22 GA GALVANIZED	22 GA GALVANIZED	ERM48/1A
DS-10SA	RTU-10 SA	5500	0.12	1375	7	9	12	18	13	10	9	8	36	16	48	RS	STANDARD	FIBERGLASS	22 GA GALVANIZED	22 GA GALVANIZED	RM48/WB
DS-10SB	RTU-10 SA	4300	0.12	1613	7	10	14	18	19	19	18	17	24	16	48	RE	STANDARD	FIBERGLASS	22 GA GALVANIZED	18 GA GALVANIZED	ERM48/6A
DS-11R	RTU-11 RA	3000	0.04	844	6	8	12	18	14	11	9	7	32	16	36	RS	STANDARD	FIBERGLASS	22 GA GALVANIZED	18 GA GALVANIZED	RM36/UB
DS-11S	RTU-11 SA	3000	0.05	964	6	7	11	17	13	11	10	7	32	14	36	RS	STANDARD	FIBERGLASS	22 GA GALVANIZED	18 GA GALVANIZED	RM36/UB
DS-12R	RTU-12 RA	3000	0.06	844	8	13	21	26	33	30	26	23	32	16	46	RE	STANDARD	FIBERGLASS	22 GA GALVANIZED	18 GA GALVANIZED	ERM46/2B
DS-12S	RTU-12 SA	3200	0.11	1176	7	11	18	24	30	30	26	23	28	14	44	RE	STANDARD	FIBERGLASS	22 GA GALVANIZED	18 GA GALVANIZED	ERM44/2B

GENERAL NOTES:
1. DUCT SILENCER MODEL NUMBERS ARE BASED ON PRICE NOISE CONTROL UNLESS OTHERWISE NOTED.
2. LENGTH SHOWN FOR ELBOW SILENCERS IS CENTERLINE LENGTH.
3. VELOCITY SHOWN IS +(FORWARD FLOW) OR -(REVERSE FLOW) AS DEFINED BY ASTM E477-99.
4. PRESSURE DROP, DYNAMIC INSERTION LOSS AND SELF GENERATED NOISE PER ASTM E477-99.
5. MAXIMUM PRESSURE DROP WITH SYSTEM EFFECTS = SILENCER PRESSURE DROP PER ASTM E477-99 + SYSTEM EFFECTS FOR NEARBY DUCT ELEMENTS.
6. TYPE: RS = RECTANGULAR STRAIGHT; RE = RECTANGULAR ELBOW; REE = RECTANGULAR EXTENDED ELBOW; CS = CIRCULAR STRAIGHT; CE = CIRCULAR ELBOW.

EXPANSION TANK SCHEDULE

UNIT IDENTIFICATION	SYSTEM SERVED	ESTIMATED TOTAL SYSTEM VOLUME GALLONS	TYPE	FLUID TYPE	SYSTEM FILL VALVE PRESSURE SETTING PSIG	OPERATING PRESSURES AT EXPANSION TANK		SYSTEM OPERATING TEMPERATURES		EXPANSION VOLUME GALLONS	ACCEPTANCE FACTOR	MINIMUM TANK VOLUME GALLONS	DIMENSIONS		MODEL NUMBER	KEYED NOTES
						PRE-CHARGE PSIG	MAX (OPERATING) PSIG	MINIMUM °F	MAXIMUM °F				DIAMETER INCHES	HEIGHT INCHES		
ET-1	CHW SYSTEM	285	DIAPHRAM	WATER	15	19.8	34.5	40	90	1.2	0.3	4	12	19	D15V	
ET-2	DWH SYSTEM	236	DIAPHRAM	WATER	---	35	74.6	40	140	3.3	0.39	9.3	15-3/8	19-1/4	PT-25V	

GENERAL NOTES:
1. MODEL NUMBERS ARE BELL & GOSSETT UNLESS OTHERWISE NOTED.
2. THE CONTRACTOR SHALL PRE-CHARGE THE TANK TO THE VALUE INDICATED IN THE SCHEDULE. FOR TANKS THAT ARE SUPPLIED PRE-CHARGED BY THE MANUFACTURER, THE CONTRACTOR SHALL CONFIRM THE PRESSURE AND MAKE ADJUSTMENTS AS REQUIRED.

HOT WATER RADIANT CEILING PANEL SCHEDULE

UNIT IDENTIFICATION	CAPACITY BTUH/ LINEAR FT.	FLUID TYPE	WATER TEMP		DIMENSIONS		FINISH	CONSTRUCTION	CONTROL VALVE W.P.D. FT. HEAD	MODEL NUMBER	KEYED NOTES
			E.W.T. °F	L.W.T. °F	LENGTH INCHES	WIDTH INCHES					
RCP-1	303	W	180	160	SEE PLANS	1'-6"	WHITE	ALUMINUM	15	NOTE 2	
RCP-2	212	W	180	160	SEE PLANS	1'-0"	WHITE	ALUMINUM	15	NOTE 2	

GENERAL NOTES:
1. MODEL NUMBERS ARE AIRTEX UNLESS OTHERWISE NOTED.
2. EXTRUDED ARCHITECTURAL SPACE MASTERY SERIES HEF-2 FLUTED.
3. FLUID TYPE: W = WATER

HOT WATER PROPELLER FAN UNIT HEATER SCHEDULE

UNIT IDENTIFICATION	CAPACITY MBH	AIRFLOW CFM	LEAVING AIR TEMPERATURE °F	FAN		WATER					CONTROL VALVE W.P.D. FT. HEAD	MODULATION/ CONTROL TYPE	ELECTRICAL					MODEL NUMBER	KEYED NOTES
				W	RPM	FLOW GPM	FLUID TYPE	E.W.T. °F	L.W.T. °F	MAXIMUM W.P.D. FT. HEAD			VOLTS	PHASE	MCA	SCCR KA	OPTIONS/ ACCESSORIES		
UH-2	24,800	580	102	25	1550	2.5	W	180	160	2.2	15	AUTO	115	1	1.5	10	---	HS-125A	

GENERAL NOTES:
1. REFER TO SCHEDULES GENERAL NOTES.
2. MODEL NUMBERS ARE STERLING UNLESS OTHERWISE NOTED.
3. FLUID TYPE: W = WATER

\\pba.local\projects\2021\2021-0163-00\CAD\2021-0163-M7-SH8.dwg, M7.8, 3/17/2022 2:02:28 PM, Suho A. Matti, Peter Basso Associates Inc.

PARTNERS

PARTNERS in Architecture, PLC
65 MARKET STREET
MOUNT CLEMENS, MI 48043
P 586.469.3600

Statement of Intellectual Property

The ideas, concepts, drawings and thoughts conveyed herein are the intellectual property of PARTNERS in Architecture, PLC, 65 Market Street, Mount Clemens, MI, 48043 (P 586.469.3600). This set of drawings, in whole or in part, may not be reproduced, without the written consent of PARTNERS in Architecture, PLC. This information is protected under U.S. Copyright Law, all rights reserved.

© Copyright 2022

CONSULTANT

Peter Basso Associates Inc
CONSULTING ENGINEERS
5145 Livernois, Suite 100
Troy, Michigan 48098-3276
Tel: 248-879-5666
Fax: 248-879-0007
www.PeterBassoAssociates.com
PBA Project No. 2021.0163

KEY PLAN

OWNER

Canton Township
Public Safety

PROJECT NAME

Public Safety Building
Interior Renovations

1150 S. Canton Center Road
Canton, MI 48188

PROJECT NO.

21-130

ISSUES / REVISIONS

SD Issue	9/20/2021
Design Development	10/29/2021
Pricing Set	01/19/2022
95% Review	02/02/2022
QAQC	02/18/2022
Bidding / Construction	03/09/2022
Addendum 01	03/18/2022

DRAWN BY
MDR

CHECKED BY
DAC

APPROVED BY
DAC

SHEET NAME
MECHANICAL SCHEDULES

SHEET NO.
M7.8

THE FOLLOWING DIMENSION EQUALS ONE INCH WHEN PRINTED TO SCALE. 1"

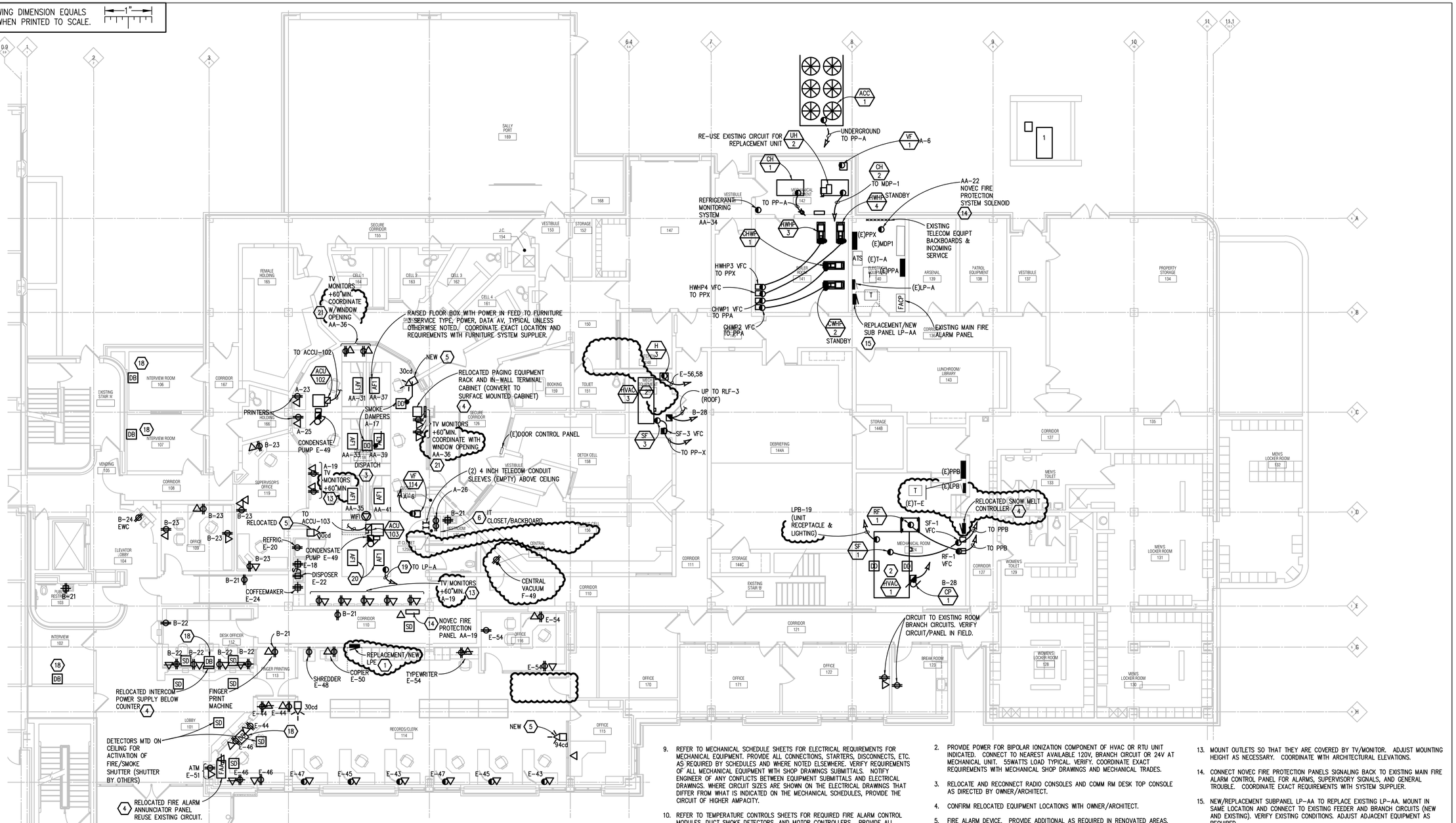

FIRST FLOOR POWER PLAN

SCALE: 1/8" = 1' - 0"

ELECTRICAL GENERAL NOTES:

1. THESE DRAWINGS REPRESENT THE GENERAL EXTENT AND ARRANGEMENT OF SYSTEMS. COORDINATE EXACT EQUIPMENT LOCATIONS, ELEVATIONS, AND FINAL CONNECTION REQUIREMENTS. PROVIDE EACH SYSTEM COMPLETE, INCLUDING ALL NECESSARY COMPONENTS, FITTINGS AND OFFSETS.
2. INSTALL SYSTEMS SUCH THAT REQUIRED CLEARANCE AND SERVICE ACCESS SPACE IS PROVIDED AROUND ALL MECHANICAL AND ELECTRICAL EQUIPMENT, AND AROUND ANY COMPONENTS WHICH REQUIRE SERVICE ACCESS.
3. COORDINATE AND PROVIDE ACCESS DOORS WITHIN INACCESSIBLE CEILING, SHAFT, AND CHASE AREAS FOR ALL COMPONENTS WHICH REQUIRE SERVICE ACCESS. REFER TO ARCHITECTURAL DRAWINGS FOR CEILING TYPES.
4. PROVIDE SUPPLEMENTARY STEEL AS REQUIRED FOR THE PROPER SUPPORT OF ALL SYSTEMS.
5. TRANSFORMER SECONDARY CONDUCTORS SHALL BE SIZED IN ACCORDANCE WITH TRANSFORMER CIRCUIT SIZING SCHEDULE SHOWN ON "ELECTRICAL STANDARD SCHEDULES DRAWING" UNLESS OTHERWISE NOTED.
6. MOTOR CIRCUIT PROTECTION SHALL BE SIZED IN ACCORDANCE WITH MOTOR CIRCUIT SIZING SCHEDULES SHOWN ON "ELECTRICAL STANDARD SCHEDULES DRAWING" UNLESS OTHERWISE NOTED.
7. COORDINATE THE MOUNTING HEIGHTS OF DEVICES WITH ARCHITECTURAL ELEVATIONS AND THE TRADES INSTALLING THE WORK.
8. COORDINATE EXACT LOCATIONS OF ALL FLOOR SERVICE FITTINGS AND POKE-THROUGH ASSEMBLIES WITH FINAL FURNITURE LAYOUT DRAWINGS.
9. REFER TO MECHANICAL SCHEDULE SHEETS FOR ELECTRICAL REQUIREMENTS FOR MECHANICAL EQUIPMENT. PROVIDE ALL CONNECTIONS, STARTERS, DISCONNECTS, ETC. AS REQUIRED BY SCHEDULES AND WHERE NOTED ELSEWHERE. VERIFY REQUIREMENTS OF ALL MECHANICAL EQUIPMENT WITH SHOP DRAWINGS SUBMITTALS. NOTIFY ENGINEER OF ANY CONFLICTS BETWEEN EQUIPMENT SUBMITTALS AND ELECTRICAL DRAWINGS. WHERE CIRCUIT SIZES ARE SHOWN ON THE ELECTRICAL DRAWINGS THAT DIFFER FROM WHAT IS INDICATED ON THE MECHANICAL SCHEDULES, PROVIDE THE CIRCUIT OF HIGHER AMPACITY.
10. REFER TO TEMPERATURE CONTROLS SHEETS FOR REQUIRED FIRE ALARM CONTROL MODULES, DUCT SMOKE DETECTORS, AND MOTOR CONTROLLERS. PROVIDE ALL ACCESSORIES INDICATED.
11. REFER TO LIGHTING CONTROL SCHEDULE FOR ROOM CONTROL AND EMERGENCY LIGHTING CIRCUIT CONTROL REQUIREMENTS. DESIGNATION FOR ROOM IS INDICATED AS A LETTERED OVAL SYMBOL.
12. ALL FIRE ALARM DEVICES SHALL BE COMPATIBLE WITH EXISTING FIRE ALARM SYSTEM. PROVIDE NECESSARY COMPONENTS, MODULES, ETC. AS REQUIRED FOR A FULLY FUNCTIONAL SYSTEM. RE-TEST AND CERTIFY EXISTING FIRE ALARM SYSTEM AT COMPLETION OF PROJECT.
13. PROVIDE TAMPER-RESISTANT TYPE RECEPTACLES FOR ALL NEW RECEPTACLES IN PUBLIC AREAS, UNLESS OTHERWISE NOTED.
14. ALL NEW LIGHTING TO BE CONNECTED VIA EXISTING LIGHTING CIRCUITS IN EACH ROOM/AREA. REFER TO PANELBOARD SCHEDULES FOR EXISTING AND REVISED PANEL AND CIRCUIT NUMBER LOCATIONS. FOR AREAS NOT INCLUDED IN THESE SCHEDULES, VERIFY EXISTING PANEL AND CIRCUIT NUMBERS PRIOR TO INSTALLATION OF NEW LIGHTING EQUIPMENT.
15. ALL ELECTRICAL AND TELECOMMUNICATION CONDUIT, RACEWAYS, AND BOXES ARE TO BE RUN CONCEALED IN EXISTING OR NEW WALL CAVITIES. PROVIDE CUTTING AND PATCHING OF WALL CONSTRUCTION AS REQUIRED TO RESTORE WALL FINISH, INSULATION, AND ASSEMBLY TO MATCH EXISTING.

CONSTRUCTION KEY NOTES:

1. NEW PANEL LP-E REPLACING EXISTING PANEL LP-E. EXTEND FEEDER AND BRANCH CIRCUITS TO NEW PANEL/LOCATION. VERIFY EXISTING CONDITIONS.
2. PROVIDE POWER FOR BIPOLAR IONIZATION COMPONENT OF HVAC OR RTU UNIT INDICATED. CONNECT TO NEAREST AVAILABLE 120V, BRANCH CIRCUIT OR 24V AT MECHANICAL UNIT. 55WATTS LOAD TYPICAL. VERIFY. COORDINATE EXACT REQUIREMENTS WITH MECHANICAL SHOP DRAWINGS AND MECHANICAL TRADES.
3. RELOCATE AND RECONNECT RADIO CONSOLES AND COMM RM DESK TOP CONSOLE AS DIRECTED BY OWNER/ARCHITECT.
4. CONFIRM RELOCATED EQUIPMENT LOCATIONS WITH OWNER/ARCHITECT.
5. FIRE ALARM DEVICE. PROVIDE ADDITIONAL AS REQUIRED IN RENOVATED AREAS.
6. PROVIDE BACKBOARD AND COORDINATE WITH OWNER INSTALLATION OF TERMINAL BOARDS AND EQUIPMENT RELOCATED FROM ORIGINAL DISPATCH I.T. CLOSET.
7. CONNECT NEW ROOF TOP EQUIPMENT TO EXISTING LIGHTING PROTECTION SYSTEM. VERIFY SYSTEM REQUIREMENTS IN FIELD.
8. AT MDP-2 IN ADMINISTRATION BUILDING BASEMENT ELECTRICAL ROOM A030. REPLACE FUSE AT EXISTING 200A SWITCH FOR ORIGINAL RTU-10 WITH 110A FUSE. CONNECT TO NEW FEEDER FOR NEW RTU-10. APPROX 274 FEET TO MDP-2 - VERIFY IN FIELD.
9. AT MDP-2 IN ADMINSTRATION BUILDING BASEMENT ELECTRICAL ROOM A030. REPLACE EXISTING SWITCH AND FUSE FOR ORIGINAL RTU-11 WITH NEW 60ASW/35AFU. CONNECT TO NEW FEEDER FOR NEW RTU-11. APPROX. 289 FEET TO MDP-2 - VERIFY IN FIELD.
10. AT MDP-2 IN ADMINISTRATION BUILDING BASEMENT ELECTRICAL ROOM A030. REPLACE EXISTING SPARE SWITCH AND FUSE WITH NEW 60ASW/45A FUSE. CONNECT TO NEW FEEDER FOR NEW RTU-12. APPROX. 268 TO MDP-2 - VERIFY IN FIELD.
11. REUSE EXISTING AREA BRANCH CIRCUITS IF POSSIBLE, OTHERWISE CIRCUIT AS SHOWN. CIRCUITING INDICATED IS INDICATIVE OF MAXIMUM LOADING AND DISTRIBUTION OF BRANCH CIRCUITS REQUIRED.
12. LOCATE POKETHROUGHS IN CONFERENCE ROOM ON 12'-0" X 8'-0" GRID FOR USE AS FUTURE EMERGENCY COMMAND CENTER. ADDITIONAL WALL MOUNTED RECEPTACLES AND TELECOMMUNICATIONS OUTLETS PROVIDED IN ADDITION TO EXISTING WALL MOUNTED OUTLETS FOR FUTURE EMERGENCY COMMAND CENTER. NEW RECEPTACLES/POKETHROUGHS FOR COMMAND CENTER IN THIS ROOM TO CIRCUITED TO EMERGENCY PANEL.
13. MOUNT OUTLETS SO THAT THEY ARE COVERED BY TV/MONITOR. ADJUST MOUNTING HEIGHT AS NECESSARY. COORDINATE WITH ARCHITECTURAL ELEVATIONS.
14. CONNECT NOVEC FIRE PROTECTION PANELS SIGNALING BACK TO EXISTING MAIN FIRE ALARM CONTROL PANEL FOR ALARMS, SUPERVISORY SIGNALS, AND GENERAL TROUBLE. COORDINATE EXACT REQUIREMENTS WITH SYSTEM SUPPLIER.
15. NEW/REPLACEMENT SUBPANEL LP-AA TO REPLACE EXISTING LP-AA. MOUNT IN SAME LOCATION AND CONNECT TO EXISTING FEEDER AND BRANCH CIRCUITS (NEW AND EXISTING). VERIFY EXISTING CONDITIONS. ADJUST ADJACENT EQUIPMENT AS REQUIRED.
16. NEW/REPLACEMENT PANEL LP-F TO REPLACE EXISTING LP-F. MOUNT IN SAME LOCATION AND CONNECT TO EXISTING FEEDER AND BRANCH CIRCUITS (NEW AND EXISTING). VERIFY EXISTING CONDITIONS. ADJUST ADJACENT EQUIPMENT AS REQUIRED.
17. NEW/REPLACEMENT PANEL LP-C TO REPLACE EXISTING LP-C. MOUNT IN SAME LOCATION AND CONNECT TO EXISTING FEEDER AND BRANCH CIRCUITS (NEW AND EXISTING.) VERIFY EXISTING CONDITIONS. ADJUST ADJACENT EQUIPMENT AS REQUIRED.
18. DISTRESS BUTTON MOUNTED AT DESK. COORDINATE EXACT LOCATION WITH OWNER/ARCHITECT AND SYSTEM SUPPLIER.
19. CONNECT INSULATED GROUND WIRE (CONCEALED) TO STATIC CONTROL TYPE FLOORING GROUNDING STRIPS/TERMINATIONS - SEE ARCHITECTURAL DRAWINGS AND SPECIFICATIONS. PROVIDE QUANTITIES AS REQUIRED. SIZE WIRE PER MANUFACTURERS RECOMMENDATIONS. ROUTE TO LOCAL AREA 208/120V, 3PHASE, 4WIRE ELECTRICAL PANEL GROUND BAR.
20. PROVIDE INFLOOR 3 SERVICE BOX WITH RACEWAY CONNECTIONS ETC AS WITH THE OTHER DISPATCH DESKS BUT WITH FLAT BOX COVER PLATE CABLE OF EITHER BEING REPLACE OR MODIFIED FOR FUTURE INSTALLATION OF DISPATCH DESK FURNITURE. BRANCH CIRCUIT TO BE PULLED IN FUTURE. PROVIDE PULL WIRES FOR FUTURE CABLING.
21. MOUNT RECEPTACLE AND TELECOM BOX ABOVE EXISTING WINDOW. COORDINATE WITH ARCHITECT AND ADJUST EXACT LOCATION IN FIELD

PARTNERS

PARTNERS in Architecture, PLC
65 MARKET STREET
MOUNT CLEMENS, MI 48043
P 586.469.3600

Statement of Intellectual Property

The ideas, concepts, drawings and thoughts conveyed herein are the intellectual property of PARTNERS in Architecture, PLC, 65 Market Street, Mount Clemens, MI, 48043 (P 586.469.3600). This set of drawings, in whole or in part, may not be reproduced, without the written consent of PARTNERS in Architecture, PLC. This information is protected under U.S. Copyright Law, all rights reserved.

© Copyright 2022

CONSULTANT

Peter Basso Associates Inc
CONSULTING ENGINEERS
5145 Livernois, Suite 100
Troy, Michigan 48098-3276
Tel: 248-879-5666
Fax: 248-879-0007
www.PeterBassoAssociates.com
PBA Project No: 2021.0163

KEY PLAN

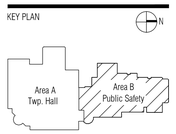

OWNER

Canton Township Public Safety

PROJECT NAME

Public Safety Building Interior Renovations

1150 S. Canton Center Road
Canton, MI 48188

PROJECT NO.

21-130

ISSUES / REVISIONS

SD Issue	9/20/2021
Design Development	10/29/2021
Pricing Set	01/19/2022
95% Review	02/02/2022
QAQC	02/18/2022
Bidding / Construction	03/09/2022
Addendum 01	03/18/2022

DRAWN BY SAM

CHECKED BY EMG

APPROVED BY EMG

SHEET NAME FIRST FLOOR POWER PLAN

SHEET NO. E3.1

\\pba.local\projects\2021\2021-0163-00\CAD\2021-0163-E3-PP1.dwg, E3.1, 3/17/2022 2:01:28 PM, Suha A. Matti, Peter Basso Associates Inc.

THE FOLLOWING DIMENSION EQUALS ONE INCH WHEN PRINTED TO SCALE. 1"

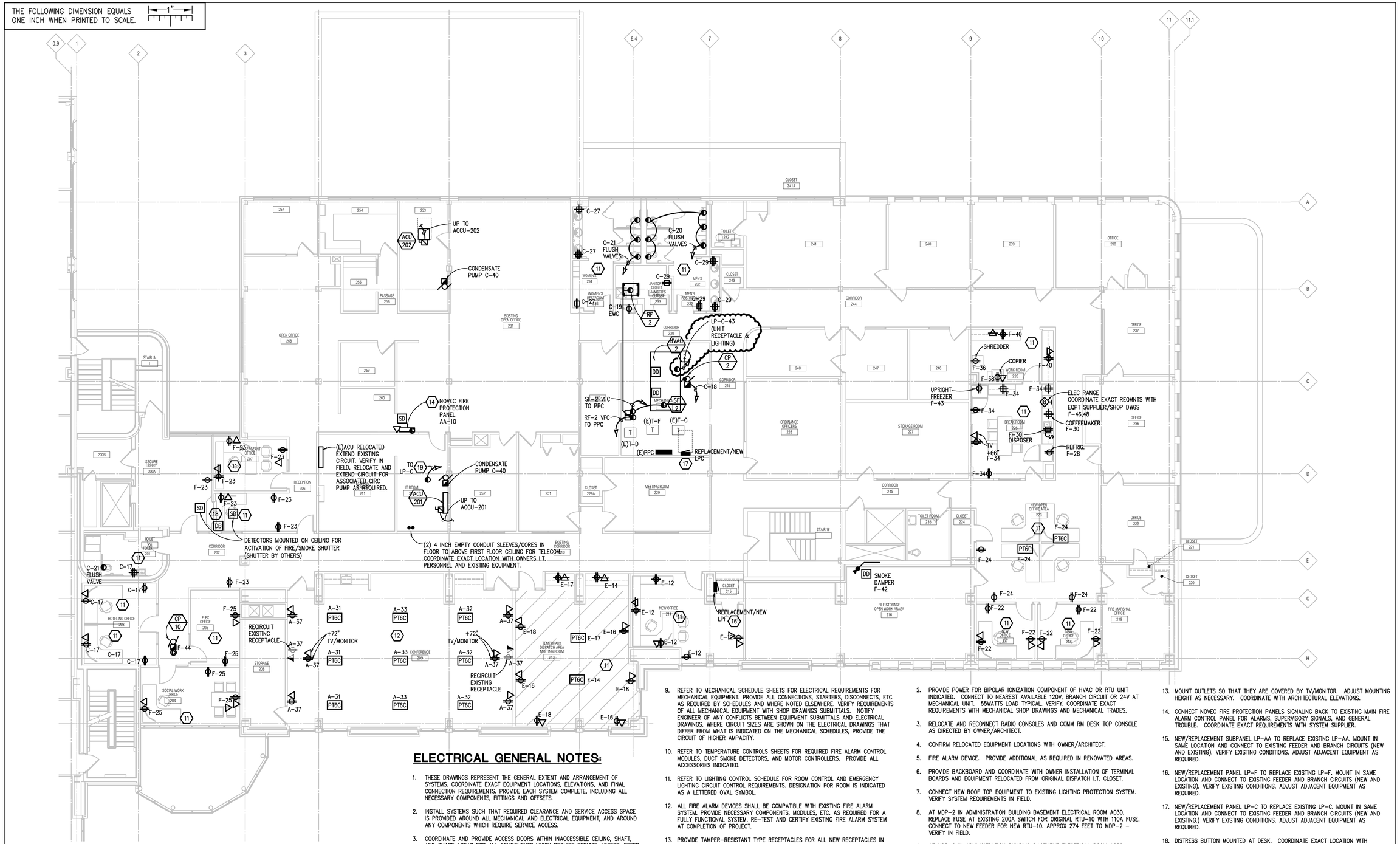

SECOND FLOOR POWER PLAN

SCALE: 1/8" = 1' - 0"

ELECTRICAL GENERAL NOTES:

1. THESE DRAWINGS REPRESENT THE GENERAL EXTENT AND ARRANGEMENT OF SYSTEMS. COORDINATE EXACT EQUIPMENT LOCATIONS, ELEVATIONS, AND FINAL CONNECTION REQUIREMENTS. PROVIDE EACH SYSTEM COMPLETE, INCLUDING ALL NECESSARY COMPONENTS, FITTINGS AND OFFSETS.
2. INSTALL SYSTEMS SUCH THAT REQUIRED CLEARANCE AND SERVICE ACCESS SPACE IS PROVIDED AROUND ALL MECHANICAL AND ELECTRICAL EQUIPMENT, AND AROUND ANY COMPONENTS WHICH REQUIRE SERVICE ACCESS.
3. COORDINATE AND PROVIDE ACCESS DOORS WITHIN INACCESSIBLE CEILING, SHAFT, AND CHASE AREAS FOR ALL COMPONENTS WHICH REQUIRE SERVICE ACCESS. REFER TO ARCHITECTURAL DRAWINGS FOR CEILING TYPES.
4. PROVIDE SUPPLEMENTARY STEEL AS REQUIRED FOR THE PROPER SUPPORT OF ALL SYSTEMS.
5. TRANSFORMER SECONDARY CONDUCTORS SHALL BE SIZED IN ACCORDANCE WITH TRANSFORMER CIRCUIT SIZING SCHEDULE SHOWN ON "ELECTRICAL STANDARD SCHEDULES DRAWING" UNLESS OTHERWISE NOTED.
6. MOTOR CIRCUIT PROTECTION SHALL BE SIZED IN ACCORDANCE WITH MOTOR CIRCUIT SIZING SCHEDULES SHOWN ON "ELECTRICAL STANDARD SCHEDULES DRAWING" UNLESS OTHERWISE NOTED.
7. COORDINATE THE MOUNTING HEIGHTS OF DEVICES WITH ARCHITECTURAL ELEVATIONS AND THE TRADES INSTALLING THE WORK.
8. COORDINATE EXACT LOCATIONS OF ALL FLOOR SERVICE FITTINGS AND POKE-THROUGH ASSEMBLIES WITH FINAL FURNITURE LAYOUT DRAWINGS.
9. REFER TO MECHANICAL SCHEDULE SHEETS FOR ELECTRICAL REQUIREMENTS FOR MECHANICAL EQUIPMENT. PROVIDE ALL CONNECTIONS, STARTERS, DISCONNECTS, ETC. AS REQUIRED BY SCHEDULES AND WHERE NOTED ELSEWHERE. VERIFY REQUIREMENTS OF ALL MECHANICAL EQUIPMENT WITH SHOP DRAWINGS SUBMITTALS. NOTIFY ENGINEER OF ANY CONFLICTS BETWEEN EQUIPMENT SUBMITTALS AND ELECTRICAL DRAWINGS. WHERE CIRCUIT SIZES ARE SHOWN ON THE ELECTRICAL DRAWINGS THAT DIFFER FROM WHAT IS INDICATED ON THE MECHANICAL SCHEDULES, PROVIDE THE CIRCUIT OF HIGHER AMPACITY.
10. REFER TO TEMPERATURE CONTROLS SHEETS FOR REQUIRED FIRE ALARM CONTROL MODULES, DUCT SMOKE DETECTORS, AND MOTOR CONTROLLERS. PROVIDE ALL ACCESSORIES INDICATED.
11. REFER TO LIGHTING CONTROL SCHEDULE FOR ROOM CONTROL AND EMERGENCY LIGHTING CIRCUIT CONTROL REQUIREMENTS. DESIGNATION FOR ROOM IS INDICATED AS A LETTERED OVAL SYMBOL.
12. ALL FIRE ALARM DEVICES SHALL BE COMPATIBLE WITH EXISTING FIRE ALARM SYSTEM. PROVIDE NECESSARY COMPONENTS, MODULES, ETC. AS REQUIRED FOR A FULLY FUNCTIONAL SYSTEM. RE-TEST AND CERTIFY EXISTING FIRE ALARM SYSTEM AT COMPLETION OF PROJECT.
13. PROVIDE TAMPER-RESISTANT TYPE RECEPTACLES FOR ALL NEW RECEPTACLES IN PUBLIC AREAS, UNLESS OTHERWISE NOTED.
14. ALL NEW LIGHTING TO BE CONNECTED VIA EXISTING LIGHTING CIRCUITS IN EACH ROOM/AREA. REFER TO PANELBOARD SCHEDULES FOR EXISTING AND REVISED PANEL AND CIRCUIT NUMBER LOCATIONS. FOR AREAS NOT INCLUDED IN THESE SCHEDULES, VERIFY EXISTING PANEL AND CIRCUIT NUMBERS PRIOR TO INSTALLATION OF NEW LIGHTING EQUIPMENT.
15. ALL ELECTRICAL AND TELECOMMUNICATION CONDUIT, RACEWAYS, AND BOXES ARE TO BE RUN CONCEALED IN EXISTING OR NEW WALL CAVITIES. PROVIDE CUTTING AND PATCHING OF WALL CONSTRUCTION AS REQUIRED TO RESTORE WALL FINISH, INSULATION, AND ASSEMBLY TO MATCH EXISTING.

CONSTRUCTION KEY NOTES:

1. NEW PANEL LP-E REPLACING EXISTING PANEL LP-E. EXTEND FEEDER AND BRANCH CIRCUITS TO NEW PANEL/LOCATION. VERIFY EXISTING CONDITIONS.
2. PROVIDE POWER FOR BIPOLAR IONIZATION COMPONENT OF HVAC OR RTU UNIT INDICATED. CONNECT TO NEAREST AVAILABLE 120V, BRANCH CIRCUIT OR 24V AT MECHANICAL UNIT. 55WATTS LOAD TYPICAL. VERIFY. COORDINATE EXACT REQUIREMENTS WITH MECHANICAL SHOP DRAWINGS AND MECHANICAL TRADES.
3. RELOCATE AND RECONNECT RADIO CONSOLES AND COMM RM DESK TOP CONSOLE AS DIRECTED BY OWNER/ARCHITECT.
4. CONFIRM RELOCATED EQUIPMENT LOCATIONS WITH OWNER/ARCHITECT.
5. FIRE ALARM DEVICE. PROVIDE ADDITIONAL AS REQUIRED IN RENOVATED AREAS.
6. PROVIDE BACKBOARD AND COORDINATE WITH OWNER INSTALLATION OF TERMINAL BOARDS AND EQUIPMENT RELOCATED FROM ORIGINAL DISPATCH I.T. CLOSET.
7. CONNECT NEW ROOF TOP EQUIPMENT TO EXISTING LIGHTING PROTECTION SYSTEM. VERIFY SYSTEM REQUIREMENTS IN FIELD.
8. AT MDP-2 IN ADMINISTRATION BUILDING BASEMENT ELECTRICAL ROOM A030. REPLACE FUSE AT EXISTING 200A SWITCH FOR ORIGINAL RTU-10 WITH 110A FUSE. CONNECT TO NEW FEEDER FOR NEW RTU-10. APPROX 274 FEET TO MDP-2 - VERIFY IN FIELD.
9. AT MDP-2 IN ADMINSITRATION BUILDING BASEMENT ELECTRICAL ROOM A030. REPLACE EXISTING SWITCH AND FUSE FOR ORIGINAL RTU-11 WITH NEW 60ASW/35AFU. CONNECT TO NEW FEEDER FOR NEW RTU-11. APPROX. 289 FEET TO MDP-2 - VERIFY IN FIELD.
10. AT MDP-2 IN ADMINISTRATION BUILDING BASEMENT ELECTRICAL ROOM A030. REPLACE EXISTING SPARE SWITCH AND FUSE WITH NEW 60ASW/45A FUSE. CONNECT TO NEW FEEDER FOR NEW RTU-12. APPROX. 268 TO MDP-2 - VERIFY IN FIELD.
11. REUSE EXISTING AREA BRANCH CIRCUITS IF POSSIBLE, OTHERWISE CIRCUIT AS SHOWN. CIRCUITING INDICATED IS INDICATIVE OF MAXIMUM LOADING AND DISTRIBUTION OF BRANCH CIRCUITS REQUIRED.
12. LOCATE POKETHROUGHS IN CONFERENCE ROOM ON 12'-0" X 8'-0" GRID FOR USE AS FUTURE EMERGENCY COMMAND CENTER. ADDITIONAL WALL MOUNTED RECEPTACLES AND TELECOMMUNICATIONS OUTLETS PROVIDED IN ADDITION TO EXISTING WALL MOUNTED OUTLETS FOR FUTURE EMERGENCY COMMAND CENTER. NEW RECEPTACLES/POKETHROUGHS FOR COMMAND CENTER IN THIS ROOM TO CIRCUITED TO EMERGENCY PANEL.
13. MOUNT OUTLETS SO THAT THEY ARE COVERED BY TV/MONITOR. ADJUST MOUNTING HEIGHT AS NECESSARY. COORDINATE WITH ARCHITECTURAL ELEVATIONS.
14. CONNECT NOVEC FIRE PROTECTION PANELS SIGNALING BACK TO EXISTING MAIN FIRE ALARM CONTROL PANEL FOR ALARMS, SUPERVISORY SIGNALS, AND GENERAL TROUBLE. COORDINATE EXACT REQUIREMENTS WITH SYSTEM SUPPLIER.
15. NEW/REPLACEMENT SUBPANEL LP-AA TO REPLACE EXISTING LP-AA. MOUNT IN SAME LOCATION AND CONNECT TO EXISTING FEEDER AND BRANCH CIRCUITS (NEW AND EXISTING). VERIFY EXISTING CONDITIONS. ADJUST ADJACENT EQUIPMENT AS REQUIRED.
16. NEW/REPLACEMENT PANEL LP-F TO REPLACE EXISTING LP-F. MOUNT IN SAME LOCATION AND CONNECT TO EXISTING FEEDER AND BRANCH CIRCUITS (NEW AND EXISTING). VERIFY EXISTING CONDITIONS. ADJUST ADJACENT EQUIPMENT AS REQUIRED.
17. NEW/REPLACEMENT PANEL LP-C TO REPLACE EXISTING LP-C. MOUNT IN SAME LOCATION AND CONNECT TO EXISTING FEEDER AND BRANCH CIRCUITS (NEW AND EXISTING.) VERIFY EXISTING CONDITIONS. ADJUST ADJACENT EQUIPMENT AS REQUIRED.
18. DISTRESS BUTTON MOUNTED AT DESK. COORDINATE EXACT LOCATION WITH OWNER/ARCHITECT AND SYSTEM SUPPLIER.
19. CONNECT INSULATED GROUND WIRE (CONCEALED) TO STATIC CONTROL TYPE FLOORING GROUNDING STRIPS/TERMINATIONS - SEE ARCHITECTURAL DRAWINGS AND SPECIFICATIONS. PROVIDE QUANTITIES AS REQUIRED. SIZE WIRE PER MANUFACTURERS RECOMMENDATIONS. ROUTE TO LOCAL AREA 208/120V, 3PHASE, 4WIRE ELECTRICAL PANEL GROUND BAR.
20. PROVIDE INFLOOR 3 SERVICE BOX WITH RACEWAY CONNECTIONS ETC AS WITH THE OTHER DISPATCH DESKS BUT WITH FLAT BOX COVER PLATE CABLE OF EITHER BEING REPLACE OR MODIFIED FOR FUTURE INSTALLATION OF DISPATCH DESK FURNITURE. BRANCH CIRCUIT TO BE PULLED IN FUTURE. PROVIDE PULL WIRES FOR FUTURE CABLING.
21. MOUNT RECEPTACLE AND TELECOM BOX ABOVE EXISTING WINDOW. COORDINATE WITH ARCHITECT AND ADJUST EXACT LOCATION IN FIELD

PARTNERS

PARTNERS in Architecture, PLC
65 MARKET STREET
MOUNT CLEMENS, MI 48043
P 586.469.3600

Statement of Intellectual Property

The ideas, concepts, drawings and thoughts conveyed herein are the intellectual property of PARTNERS in Architecture, PLC, 65 Market Street, Mount Clemens, MI, 48043 (P 586.469.3600). This set of drawings, in whole or in part, may not be reproduced, without the written consent of PARTNERS in Architecture, PLC. This information is protected under U.S. Copyright Law, all rights reserved.

© Copyright 2022

CONSULTANT

Peter Basso Associates Inc
CONSULTING ENGINEERS
5145 Livernois, Suite 100
Troy, Michigan 48098-3276
Tel: 248-879-5666
Fax: 248-879-0007
www.PeterBassoAssociates.com
PBA Project No: 2021.0163

KEY PLAN

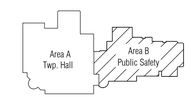

OWNER

Canton Township Public Safety

PROJECT NAME

Public Safety Building Interior Renovations

1150 S. Canton Center Road
Canton, MI 48188

PROJECT NO.

21-130

ISSUES / REVISIONS

SD Issue	9/20/2021
Design Development	10/29/2021
Pricing Set	01/19/2022
95% Review	02/02/2022
QAQC	02/18/2022
Bidding / Construction	03/09/2022
Addendum 01	03/18/2022

DRAWN BY
SAM

CHECKED BY
EMG

APPROVED BY
EMG

SHEET NAME
SECOND FLOOR POWER PLAN

SHEET NO.
E3.2

\\pba.local\projects\2021\2021-0163-00\CAD\2021-0163-E3-PP2.dwg, E3.2, 3/17/2022 2:01:37 PM, Suha A. Matti, Peter Basso Associates Inc.

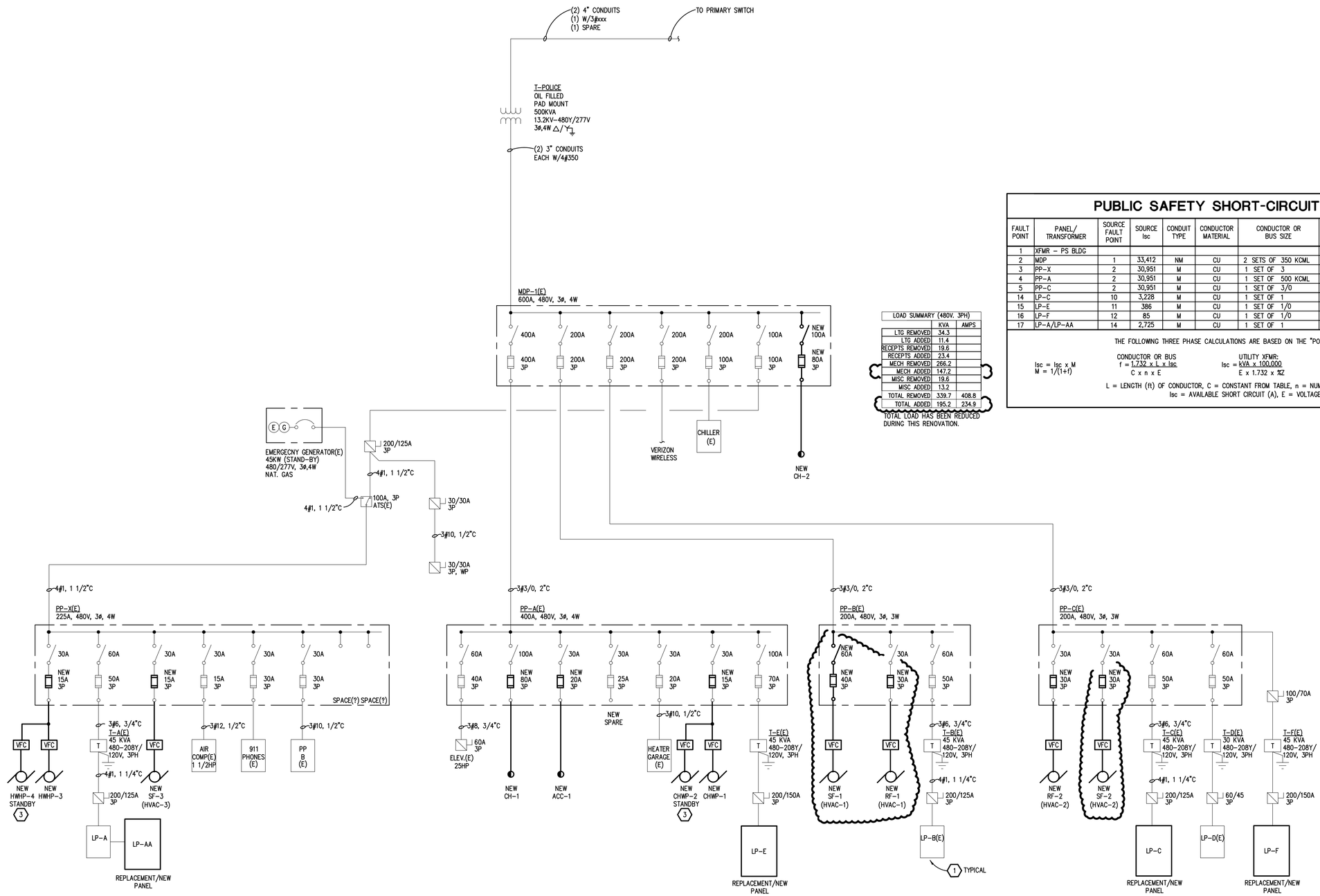

LOAD SUMMARY (480V. 3PH)		
	KVA	AMPS
LTG REMOVED	34.3	
LTG ADDED	11.4	
RECEPTS REMOVED	19.6	
RECEPTS ADDED	23.4	
MECH REMOVED	268.2	
MECH ADDED	147.2	
MISC REMOVED	19.6	
MISC ADDED	13.2	
TOTAL REMOVED	339.7	408.8
TOTAL ADDED	195.2	234.9

TOTAL LOAD HAS BEEN REDUCED DURING THIS RENOVATION.

PUBLIC SAFETY SHORT-CIRCUIT CALCULATIONS

FAULT POINT	PANEL/ TRANSFORMER	SOURCE FAULT POINT	SOURCE Isc	CONDUIT TYPE	CONDUCTOR MATERIAL	CONDUCTOR OR BUS SIZE	'C' VALUE	E (V)	L (FT)	XFMR kVA	XFMR %Z	f	M	Isc
1	XFMR – PS BLDG							480		500	1.8			33,412
2	MDP	1	33,412	NM	CU	2 SETS OF 350 KCML	22737	480	30.0			0.080	0.93	30,951
3	PP-X	2	30,951	M	CU	1 SET OF 3	4774	480	14.0			0.328	0.75	23,315
4	PP-A	2	30,951	M	CU	1 SET OF 500 KCML	22185	480	10.0			0.050	0.95	29,467
5	PP-C	2	30,951	M	CU	1 SET OF 3/0	12844	480	70.0			0.609	0.62	19,240
14	LP-C	10	3,228	M	CU	1 SET OF 1	7293	208	50.0			0.184	0.84	2,725
15	LP-E	11	386	M	CU	1 SET OF 1/0	8925	208	123.0			0.044	0.96	369
16	LP-F	12	85	M	CU	1 SET OF 1/0	8925	208	72.0			0.006	0.99	84
17	LP-A/LP-AA	14	2,725	M	CU	1 SET OF 1	7293	208	10.0			0.031	0.97	2,643

THE FOLLOWING THREE PHASE CALCULATIONS ARE BASED ON THE "POINT-BY POINT" METHOD WHERE:

$Isc = Isc \times M$

$M = 1/(1+f)$

CONDUCTOR OR BUS: $f = \frac{1.732 \times L \times Isc}{C \times n \times E}$

UTILITY XFMR: $Isc = \frac{kVA \times 100{,}000}{E \times 1.732 \times \%Z}$

XFMR: $f = \frac{Ip(sc) \times Ep \times 1.73 \times \%Z}{100{,}000 \times kVA}$ $Is(sc) = \frac{Ep \times M \times Ip(sc)}{Es}$

L = LENGTH (ft) OF CONDUCTOR, C = CONSTANT FROM TABLE, n = NUMBER OF CONDUCTORS PER PHASE

Isc = AVAILABLE SHORT CIRCUIT (A), E = VOLTAGE OF CIRCUIT

©Copyright 2021 by Peter Basso Associates, Inc.

NEW WORK POLICE STATION ONE LINE DIAGRAM

NO SCALE

\\pba.local\projects\2021\2021-0163-00\CAD\2021-0163-E5-D6.dwg, E5.2, 3/17/2022 2:01:43 PM, Suha A. Matti, Peter Basso Associates Inc.

PARTNERS

PARTNERS in Architecture, PLC
65 MARKET STREET
MOUNT CLEMENS, MI 48043
P 586.469.3600

Statement of Intellectual Property

The ideas, concepts, drawings and thoughts conveyed herein are the intellectual property of PARTNERS in Architecture, PLC, 65 Market Street, Mount Clemens, MI, 48043 (P 586.469.3600). This set of drawings, in whole or in part, may not be reproduced, without the written consent of PARTNERS in Architecture, PLC. This information is protected under U.S. Copyright Law, all rights reserved.

© Copyright 2022

CONSULTANT

Peter Basso Associates Inc
CONSULTING ENGINEERS
5145 Livernois, Suite 100
Troy, Michigan 48098-3276
Tel: 248-879-5666
Fax: 248-879-0007
www.PeterBassoAssociates.com
PBA Project No. 2021.0163

KEY PLAN

OWNER

Canton Township
Public Safety

PROJECT NAME

Public Safety Building
Interior Renovations

1150 S. Canton Center Road
Canton, MI 48188

PROJECT NO.

21-130

ISSUES / REVISIONS

SD Issue	9/20/2021
Design Development	10/29/2021
Pricing Set	01/19/2022
95% Review	02/02/2022
QAQC	02/18/2022
Bidding / Construction	03/09/2022
Addendum 01	03/18/2022

DRAWN BY

.

CHECKED BY

.

APPROVED BY

.

SHEET NAME

ONE LINE DIAGRAM

SHEET NO.

E5.2

(E) PANELBOARD LP-A

#	LOAD TYPE	DESCRIPTION	CB TYPE	CB	VA	ØA	ØB	ØC	VA	CB	CB TYPE	DESCRIPTION	LOAD TYPE	#
1		Corridor Lts		20						20		Exit and 24 hour lights		2
3		Outside Lts		20						20		Lts boiler, Elect Rm		4
5		2nd Fl. Lobby/ Corr/ Lts Computer Rm		20						20		Cypher locks, wire mold Records		6
7		Recept Elect Rm		20						20		Lts W. hall, kit, gar		8
9		Lts cells		20						20		Recept Comm		10
11		Burglar Alarm		20						20		Gar door, tube station/ A-motor opener		12
13		Fire Alarm		20						20		Elevator Lts		14
15		Sump Pump		20						70		LP-AA		16
17		LP-AA		70						70		LP-AA		18
19		Dispatch Monitor		20						15		Plug # 2 for		20
21		New ADD. EM Lights + Exit Lights		20						20		Lts, booking E kit		22
23		Tape // Lts Comm and operation (crossed out)		20						20		Lts comm and front		24
25		Recept intcom pogin		20						20		Recept S.E.		26
27		Intercom supply		20						20		Recept S.		28
29		Holdg cell door cont		20						20		Tranformer frond		30
31		Security mont.		20						20		Under floor recept		32
33		under floor recept		20						20		Under floor recept		34
35		Gen. Batt Charger		20						30		Gen block charger		36
37		Kitchenette		20						20		blank		38
39		Double 2nd Fl. Outlier		20						20		Danble 3nd Fl. Outlier		40
41		UPS AC PUMP		15						15		Plug #2 For		42
						ØA	ØB	ØC						

PANELBOARD INFORMATION
VOLTAGE: 208Y/120
BUS AMPACITY: 225A
MAIN TYPE: MLO
MINIMUM A.I.C.:
MOUNTING: SURFACE

☐ FEED-THROUGH LUGS
☐ DOUBLE LUGS
☐ INTEGRAL SPD

PANELBOARD LOCATION

BRANCH CIRCUIT CONNECTED LOAD		DEMAND FACTOR	CALCULATED LOAD	FEEDER AND OVERCURRENT SIZING	NOTES:
CONTINUOUS LOAD (C)		100%		125%	
ELECTRIC HEAT (E)		100%		125%	
NON-CONTINUOUS LOAD (NC)		100%		100%	
KITCHEN LOAD (K)		100%		100%	
RECEPTACLE BASE LOAD (R)		100%		100%	
RECEPTACLE DEMAND LOAD (R)		50%		100%	
LIGHTING LOAD (L)		100%		125%	
ADDITIONAL TRACK LIGHTING LOAD				100%	
MOTORS, HIGHEST LOAD (MH)		125%		100%	
MOTORS, REMAINING LOAD (M)		100%		100%	
		TOTAL(KVA):			
		TOTAL (AMPS):		TOTAL (AMPS):	

NOTE: DEMAND AND SIZING INFORMATION IS CALCULATED FROM CONNECTED LOAD

©Copyright 2021 by Peter Basso Associates, Inc

(E) PANELBOARD LP-AA

#	LOAD TYPE	DESCRIPTION	CB TYPE	CB	VA	ØA	ØB	ØC	VA	CB	CB TYPE	DESCRIPTION	LOAD TYPE	#
1		TV Camera, Recpt garage and boiler rm.		20						20		C.O.P		2
3		U.H-1 garage		20						20		U.H-2 mech rm 159		4
5		Sprinklar recept		20						20		Hot water Heater		6
7		H.W. circ pump		20						20		Air dryer		8
9		Dispatch kitchen		20						20		Dispatch Kitchen		10
11		Boiler		20						20		Boiler		12
13		Boiler		20						20		Lights		14
15		Garage Doors		20						20		Lts Rm 140		16
17		Lts rm 139		20						20		Recept and HVAC - 3 control		18
19		Kitchen disposal		20						20		Recept		20
21		Recept		20						20		Kitchenette disposal		22
23		Recept Operaion		20						20		booking		24
25		UPS AC PUMP		20						20		UPS AC PUMP		26
27		Spare		20						20		Unit Heaters		28
29		O.H. Door Lights		20						20		RECEPTICLES		30
						ØA	ØB	ØC						

PANELBOARD INFORMATION
VOLTAGE: 208Y/120
BUS AMPACITY: 100A
MAIN TYPE: 100A MCB
MINIMUM A.I.C.:
MOUNTING: SURFACE

☐ FEED-THROUGH LUGS
☐ DOUBLE LUGS
☐ INTEGRAL SPD

PANELBOARD LOCATION

BRANCH CIRCUIT CONNECTED LOAD		DEMAND FACTOR	CALCULATED LOAD	FEEDER AND OVERCURRENT SIZING	NOTES:
CONTINUOUS LOAD (C)		100%		125%	FED FROM LP-A
ELECTRIC HEAT (E)		100%		125%	
NON-CONTINUOUS LOAD (NC)		100%		100%	
KITCHEN LOAD (K)		100%		100%	
RECEPTACLE BASE LOAD (R)		100%		100%	
RECEPTACLE DEMAND LOAD (R)		50%		100%	
LIGHTING LOAD (L)		100%		125%	
ADDITIONAL TRACK LIGHTING LOAD				100%	
MOTORS, HIGHEST LOAD (MH)		125%		100%	
MOTORS, REMAINING LOAD (M)		100%		100%	
		TOTAL(KVA):			
		TOTAL (AMPS):		TOTAL (AMPS):	

NOTE: DEMAND AND SIZING INFORMATION IS CALCULATED FROM CONNECTED LOAD

©Copyright 2021 by Peter Basso Associates, Inc

(E) PANELBOARD LP-B

#	LOAD TYPE	DESCRIPTION	CB TYPE	CB	VA	ØA	ØB	ØC	VA	CB	CB TYPE	DESCRIPTION	LOAD TYPE	#
1		Booking Offices		20						20		Booking		2
3		Video Arr. Freezer		20						20		Booking Quad # 2		4
5		Video Arr. Breathalyzer		20						20		Janitor Supply Closet		6
7		Video ARR. Microwave		20						20		Bass Paner bake		8
9		Video Arr. Court A.V.		20						20		Prisonor Bath Fan		10
11		Video Arr. G.D		20						20		Booking Quad # 3		12
13		Report Room		20						20		Switch Gear Heaters		14
15		Report Room		20						20		Report Room		16
17		Blank		20						20		Report Room		18
19		SPARE		20						20		SPARE		20
21		SPARE		20						20		SPARE		22
23		SPARE		20						20		SPARE		24
25		SPARE		20						20		SPARE		26
27		SPARE		20						20		SPARE		28
29		SPARE		20						20		SPARE		30
31		SPARE		20						20		SPARE		32
33		SPARE		20						20		SPARE		34
35		SPARE		20						20		SPARE		36
37		SPARE		20						20		SPARE		38
39		SPARE		20						20		SPARE		40
41		SPARE		20						20		SPARE		42
						ØA	ØB	ØC						

PANELBOARD INFORMATION
VOLTAGE: 208Y/120
BUS AMPACITY: 225A
MAIN TYPE: MLO
MINIMUM A.I.C.:
MOUNTING: SURFACE

☐ FEED-THROUGH LUGS
☐ DOUBLE LUGS
☐ INTEGRAL SPD

PANELBOARD LOCATION

BRANCH CIRCUIT CONNECTED LOAD		DEMAND FACTOR	CALCULATED LOAD	FEEDER AND OVERCURRENT SIZING	NOTES:
CONTINUOUS LOAD (C)		100%		125%	
ELECTRIC HEAT (E)		100%		125%	
NON-CONTINUOUS LOAD (NC)		100%		100%	
KITCHEN LOAD (K)		100%		100%	
RECEPTACLE BASE LOAD (R)		100%		100%	
RECEPTACLE DEMAND LOAD (R)		50%		100%	
LIGHTING LOAD (L)		100%		125%	
ADDITIONAL TRACK LIGHTING LOAD				100%	
MOTORS, HIGHEST LOAD (MH)		125%		100%	
MOTORS, REMAINING LOAD (M)		100%		100%	
		TOTAL(KVA):			
		TOTAL (AMPS):		TOTAL (AMPS):	

NOTE: DEMAND AND SIZING INFORMATION IS CALCULATED FROM CONNECTED LOAD

©Copyright 2021 by Peter Basso Associates, Inc

(REV) PANELBOARD LP-A

#	LOAD TYPE	DESCRIPTION	CB TYPE	CB	VA	ØA	ØB	ØC	VA	CB	CB TYPE	DESCRIPTION	LOAD TYPE	#
1		Corridor Lts		20						20		**Exit and 24 hour lights**		2
3		Outside Lts		20						20		Lts boiler, Elect Rm		4
5	L	**REV LIGHTS- 200A, 201, 202, 203, 204, 205**		20	505				1033	528	15	NEW **NEW VF-114 - DISPATCH & VF-1 CHLR RM** M		6
7		Recept Elect Rm		20						20		Lts W. hall, kit, gar		8
9		Lts cells		20						20		Recept Comm		10
11		Burglar Alarm		20						20		Gar door, tube station/ A-motor opener		12
13		Fire Alarm		20						20		Elevator Lts		14
15		Sump Pump		20						70		LP-AA		16
17		LP-AA		70						70		LP-AA		18
19	R	**NEW DISPATCH MONITORS**		20		483			483	15		**NEW LIGHTS- DISPATCH 118, CORR 126**	L	20
21	L	**New ADD. EM Lights + Exit Lights**		20			206		206	20		**REV LIGHTS- 147, 148, 150, 152, 153**	L	22
23	R	**NEW DISPATCH PRINTER**		20	1800			1800		20		Lts comm and front		24
25	R	**NEW DISPATCH PRINTER**		20	1800	3600			1800	20		**QUAD RECEPT - IT ROOM DISPATCH**	R	26
27	R	Intercom supply		20			400		400	15	NEW	**NEW CP-1 - MECH RM 124**	M	28
29	R	Holdg cell door cont		20						20		Tranformer frond		30
31	R	**NEW POKETHROUGHS - 2ND FL CONF RM**		20	1440	2880			1440	20		**NEW POKETHOUGHS - 2ND FL CONF RM**	R	32
33	R	**NEW POKETHROUGHS - 2ND FL CONF RM**		20	1440		2880		1440	20		**NEW POKETHOUGHS - 2ND FL CONF RM**	R	34
35		Gen. Batt Charger		20						30		Gen block charger		36
37	R	**NEW RECEPTACLES - 2ND FL CONF RM**		20	1080	1272			192	20		**NEW LIGHTS- TEMP DISPATCH 213**	L	38
39		Double 2nd Fl. Outlier		20						20		Danble 3nd Fl. Outlier		40
41		UPS AC PUMP		15						15		Plug #2 For		42
						8235	3486	2833						
						ØA	ØB	ØC						

PANELBOARD INFORMATION
VOLTAGE: 208Y/120
BUS AMPACITY: 225A
MAIN TYPE: MLO
MINIMUM A.I.C.:
MOUNTING: SURFACE

☐ FEED-THROUGH LUGS
☐ DOUBLE LUGS
☐ INTEGRAL SPD

PANELBOARD LOCATION

BRANCH CIRCUIT CONNECTED LOAD		DEMAND FACTOR	CALCULATED LOAD	FEEDER AND OVERCURRENT SIZING	NOTES:
CONTINUOUS LOAD (C)		100%		125%	
ELECTRIC HEAT (E)		100%		125%	
NON-CONTINUOUS LOAD (NC)		100%		100%	
KITCHEN LOAD (K)		100%		100%	
RECEPTACLE BASE LOAD (R)	10000	100%	10000	100%	10000
RECEPTACLE DEMAND LOAD (R)	2240	50%	1120	100%	1120
LIGHTING LOAD (L)	1386	100%	1386	125%	1733
ADDITIONAL TRACK LIGHTING LOAD				100%	
MOTORS, HIGHEST LOAD (MH)		125%		100%	
MOTORS, REMAINING LOAD (M)	928	100%	928	100%	928
		TOTAL(KVA):	13.43		
		TOTAL (AMPS):	37	TOTAL (AMPS):	38

NOTE: DEMAND AND SIZING INFORMATION IS CALCULATED FROM CONNECTED LOAD

©Copyright 2021 by Peter Basso Associates, Inc

REPLACEMENT/NEW PANELBOARD LP-AA

#	LOAD TYPE	DESCRIPTION	CB TYPE	CB	VA	ØA	ØB	ØC	VA	CB	CB TYPE	DESCRIPTION	LOAD TYPE	#
1		TV Camera, Recpt garage and boiler rm.		20						20		C.O.P		2
3		U.H-1 garage		20						20		U.H-2 mech rm 159		4
5		Sprinklar recept		20						20		Hot water Heater		6
7		H.W. circ pump		20						20		Air dryer		8
9		Dispatch kitchen		20			1200		1200	20		**NEW NOVEC FIRE PROT - 2ND FL IT RM** C		10
11		Boiler		20						20		Boiler		12
13		Boiler		20						20		Lights		14
15		Garage Doors		20						20		Lts Rm 140		16
17		Lts rm 139		20						20		**NEW SPARE**		18
19	C	**NEW NOVEC FIRE PROT PNL - DISPATCH**		20	1200	1200				20		Recept		20
21		Recept		20						20		**NEW NOVEC SOLENOID - ELEC/LT. RM**		22
23		Recept Operaion		20						20		booking		24
25		UPS AC PUMP		20						20		UPS AC PUMP		26
27	L	**NEW LIGHTS- 117, 118, 120, 125A, 125B**		20	154		154			20		Unit Heaters		28
29		O.H. Door Lights		20						20		RECEPTACLES		30
31	R	**NEW ACCESS FLR BOX - DISPATCH**		20	860	1388			528	15		**NEW VF-1**	M	32
33	R	**NEW ACCESS FLR BOX - DISPATCH**		20	860		1660		800	20		**NEW REFRIG MONITORING SYSTEM**	C	34
35	R	**NEW ACCESS FLR BOX - DISPATCH**		20	860			1660	800	20		**NEW TV MON RECEPTS - DISPATCH**	C	36
37	R	**NEW ACCESS FLR BOX - DISPATCH**		20	860	860				20		SPARE		38
39	R	**NEW ACCESS FLR BOX - DISPATCH**		20	860		860			20		SPARE		40
41	R	**NEW ACCESS FLR BOX - DISPATCH**		20	860			860		20		SPARE		42
						3448	3874	2520						
						ØA	ØB	ØC						

PANELBOARD INFORMATION
VOLTAGE: 208Y/120
BUS AMPACITY: 100A
MAIN TYPE: 100A MCB
MINIMUM A.I.C.: 10,000
MOUNTING: SURFACE

☐ FEED-THROUGH LUGS
☐ DOUBLE LUGS
☐ INTEGRAL SPD

PANELBOARD LOCATION

BRANCH CIRCUIT CONNECTED LOAD		DEMAND FACTOR	CALCULATED LOAD	FEEDER AND OVERCURRENT SIZING	NOTES:
CONTINUOUS LOAD (C)	4000	100%	4000	125% 5000	FED FROM LP-A
ELECTRIC HEAT (E)		100%		125%	
NON-CONTINUOUS LOAD (NC)		100%		100%	
KITCHEN LOAD (K)		100%		100%	
RECEPTACLE BASE LOAD (R)	5160	100%	5160	100% 5160	
RECEPTACLE DEMAND LOAD (R)		50%		100%	
LIGHTING LOAD (L)	154	100%	154	125% 193	
ADDITIONAL TRACK LIGHTING LOAD				100%	
MOTORS, HIGHEST LOAD (MH)		125%		100%	
MOTORS, REMAINING LOAD (M)	528	100%	528	100% 528	
		TOTAL(KVA):	9.84		
		TOTAL (AMPS):	27	TOTAL (AMPS): 30	

NOTE: DEMAND AND SIZING INFORMATION IS CALCULATED FROM CONNECTED LOAD

©Copyright 2021 by Peter Basso Associates, Inc

REVISED PANELBOARD LP-B

#	LOAD TYPE	DESCRIPTION	CB TYPE	CB	VA	ØA	ØB	ØC	VA	CB	CB TYPE	DESCRIPTION	LOAD TYPE	#
1		Booking Offices		20						20		Booking		2
3		Video Arr. Freezer		20						20		Booking Quad # 2		4
5		Video Arr. Breathalyzer		20						20		Janitor Supply Closet		6
7		Video ARR. Microwave		20						20		Bass Paner bake		8
9		Video Arr. Court A.V.		20						20		Prisonor Bath Fan		10
11		Video Arr. G.D		20						20		Booking Quad # 3		12
13		Report Room		20						20		Switch Gear Heaters		14
15		Report Room		20						20		Report Room		16
17		Blank		20						20		Report Room		18
19	NC	**NEW HVAC-1 RECEPT & LIGHTING**		20		280	280			20		SPARE		20
21	R	**NEW RECEPT PRESTRM, CORR, PRINT**		20		940		1840		900	20	**NEW RECEPTS - DSK OFF 112**	R	22
23	R	**NEW RECEPT - OFFICES 109, 110**		20		1080			2280	1200	20	**NEW EWC**	M	24
25	L	**NEW LIGHTS- LOCKER RMS & TOILETS**		20		435	435				20	SPARE		26
27	L	**NEW LIGHTS- 135, 136, 143**		20		240		624		384	20	**NEW RLF-S**	M	28
29	L	**NEW LIGHTS- 144A, STOR 144B, 144C**		20		384		384			20	SPARE		30
31		SPARE		20							20	SPARE		32
33		SPARE		20							20	SPARE		34
35		SPARE		20							20	SPARE		36
37		SPARE		20							20	SPARE		38
39		SPARE		20							20	SPARE		40
41		SPARE		20							20	SPARE		42
						715	2464	2664						
						ØA	ØB	ØC						

PANELBOARD INFORMATION
VOLTAGE: 208Y/120
BUS AMPACITY: 225A
MAIN TYPE: MLO
MINIMUM A.I.C.:
MOUNTING: SURFACE

☐ FEED-THROUGH LUGS
☐ DOUBLE LUGS
☐ INTEGRAL SPD

PANELBOARD LOCATION

BRANCH CIRCUIT CONNECTED LOAD		DEMAND FACTOR	CALCULATED LOAD	FEEDER AND OVERCURRENT SIZING	NOTES:
CONTINUOUS LOAD (C)		100%		125%	
ELECTRIC HEAT (E)		100%		125%	
NON-CONTINUOUS LOAD (NC)	280	100%	280	100% 280	
KITCHEN LOAD (K)		100%		100%	
RECEPTACLE BASE LOAD (R)	2920	100%	2920	100% 2920	
RECEPTACLE DEMAND LOAD (R)		50%		100%	
LIGHTING LOAD (L)	1059	100%	1059	125% 1324	
ADDITIONAL TRACK LIGHTING LOAD				100%	
MOTORS, HIGHEST LOAD (MH)		125%		100%	
MOTORS, REMAINING LOAD (M)	1584	100%	1584	100% 1584	
		TOTAL(KVA):	5.84		
		TOTAL (AMPS):	16	TOTAL (AMPS): 17	

NOTE: DEMAND AND SIZING INFORMATION IS CALCULATED FROM CONNECTED LOAD

©Copyright 2021 by Peter Basso Associates, Inc

PANEL SCHEDULE INDEX

(E) LP-A	(E) LP-AA	(E) LP-B
(REV) LP-A	(REV) LP-AA	(REV) LP-B

PARTNERS

PARTNERS in Architecture, PLC
65 MARKET STREET
MOUNT CLEMENS, MI 48043
P 586.469.3600

Statement of Intellectual Property

The ideas, concepts, drawings and thoughts conveyed herein are the intellectual property of PARTNERS in Architecture, PLC, 65 Market Street, Mount Clemens, MI, 48043 (P 586.469.3600). This set of drawings, in whole or in part, may not be reproduced, without the written consent of PARTNERS in Architecture, PLC. This information is protected under U.S. Copyright Law, all rights reserved.

© Copyright 2022

CONSULTANT

Peter Basso Associates Inc
CONSULTING ENGINEERS
5145 Livernois, Suite 100
Troy, Michigan 48098-3276
Tel: 248-879-5666
Fax: 248-879-0007
www.PeterBassoAssociates.com
PBA Project No. 2021.0163

KEY PLAN

OWNER
Canton Township
Public Safety

PROJECT NAME
Public Safety Building
Interior Renovations

1150 S. Canton Center Road
Canton, MI 48188

PROJECT NO.
21-130

ISSUES / REVISIONS

SD Issue	9/20/2021
Design Development	10/29/2021
Pricing Set	01/19/2022
95% Review	02/02/2022
QAQC	02/18/2022
Bidding / Construction	03/09/2022
Addendum 01	03/18/2022

DRAWN BY
SAM
CHECKED BY
EMG
APPROVED BY
EMG
SHEET NAME
PANEL SCHEDULES

SHEET NO.
E6.1

\\pba.local\projects\2021\2021-0163-00\CAD\2021-0163-E6-SH.dwg, E6.1, 3/17/2022 2:01:49 PM, Suha A. Matti, Peter Basso Associates Inc.

\\pba.local\projects\2021\2021-0163-00\CAD\2021-0163-E6-SH.dwg, E6.2, 3/17/2022 2:01:50 PM, Suha A. Matti, Peter Basso Associates Inc.

(E) PANELBOARD LP-C

#	LOAD TYPE	DESCRIPTION	CB TYPE	CB	VA	ØA	ØB	ØC	VA	CB	CB TYPE	DESCRIPTION	LOAD TYPE	#
1		LTS RM 204, 210 & LAB ARED		20						20		FLR RECEPT RM 206/ARTS CAROLS PLUGS		22
2		RECEPTS RM 204 COPY		20						20		FLR RECEPT RM 206		23
3		RECEPTS LAB PLUGMOLD		20						20		LTS RMS 218, 221, 222		24
4		LTS RM 203		20						20		LTS MECH RM		25
5		LTS FRONT DESK ARED		20						20		TEMP CONTROL PANELS		26
6		RECEPTS FRONT DESK		20						20		WALL HTR CHIEFS RESTRM		27
7		LTS RMS 211, 212, 214, 215		20						20		RECEPT RM 226		28
8		RECEPTS, RMS 211, 212, 214, 215		20						20		LTS RMS 226, 228		29
9		RECEPTS RM 203		20						20		COMPUTER RM I.G. PLUGS		30
10		LTS RM 206		20						20		SUB PANEL IT ROOM		31
11		LTS RM 206		20										32
12		DOOR PUSHBUTTONS RM 214		20						20		EXH FANS		33
13		LTS LUNCH & RESTRM		20						20		CORRIDOR & STAIR LIGHTS		34
14		RECEPTS RESTROOMS		20						20		LOBBY LTS, HALLWAY LTS		35
15		LPC – SUBPANEL		50						20		STAIRS & PUBLIC REST ROOM		36
16										20		COPY MACHINGE		37
17		RECEPT RM 218, 221, 222		20						50		220V STOVE		38
18		SPARE		20										39
19		SPARE		20						20		SPARE		40
20		SPARE		20						20		AC PLUG		41
21		SPARE		20						20		COMPUTER RM PLUG		42
						ØA	ØB	ØC						

PANELBOARD INFORMATION
VOLTAGE: 208Y/120
BUS AMPACITY: 225A
MAIN TYPE: MLO
MINIMUM A.I.C.:
MOUNTING: SURFACE

[ ] FEED-THROUGH LUGS
[ ] DOUBLE LUGS
[ ] INTEGRAL SPD

PANELBOARD LOCATION

BRANCH CIRCUIT CONNECTED LOAD		DEMAND FACTOR	CALCULATED LOAD	FEEDER AND OVERCURRENT SIZING	
CONTINUOUS LOAD (C)		100%		125%	
ELECTRIC HEAT (E)		100%		125%	
NON-CONTINUOUS LOAD (NC)		100%		100%	
KITCHEN LOAD (K)		100%		100%	
RECEPTACLE BASE LOAD (R)		100%		100%	
RECEPTACLE DEMAND LOAD (R)		50%		100%	
LIGHTING LOAD (L)		100%		125%	
ADDITIONAL TRACK LIGHTING LOAD				100%	
MOTORS, HIGHEST LOAD (MH)		125%		100%	
MOTORS, REMAINING LOAD (M)		100%		100%	
		TOTAL(KVA):			
		TOTAL (AMPS):		TOTAL (AMPS):	

NOTE: DEMAND AND SIZING INFORMATION IS CALCULATED FROM CONNECTED LOAD

NOTES:

©Copyright 2021 by Peter Basso Associates, Inc

(E) PANELBOARD LP-E

#	LOAD TYPE	DESCRIPTION	CB TYPE	CB	VA	ØA	ØB	ØC	VA	CB	CB TYPE	DESCRIPTION	LOAD TYPE	#
1		LIGHTING B120, B121, B122, B123		20						20		RECEPT – LOCKER B126, B124, VEST, BRKRM		2
3		LIGHTING B118, B119, B114		20						20		RECPT – BREAKRM B123 GARBAGE DISPOSER		4
5		LIGHTING B112, B114		20						20		RECEPT – BREAKROOM B123		6
7		LIGHTING B106, B107, B108, B109, B110		20						20		RECEPT – BREAKEROOM B123 REFRIG		8
9		LIGHTING B101		20						20		RECEPT – BRKRM B123,SEC B121,CAPT B120		10
11		RECEPT – LOBBY, LIGHTING FOYER		20						20		RECEPT – CAPT B120		12
13		EWC LOBBY B102		20						20		RECEPT – STORAGE B119, RECORDS B114		14
15		LOBBY ADA DOORS		20						20		RECEPT – STORAGE B119, RECORDS OFFICE		16
17		RECEPT – RECORDS B114		20						20		RECEPT – RECORDS OPEN OFFICE B114		18
19		SPARE		20						20		RECEPT – RECORDS OFFICE SYS FURNITURE		20
21		SPARE		20						20		RECEPT – RECORDS OFFICE SYS FURNITURE		22
23		SPARE		20						20		RECEPT – RECORDS OFFICE SYS FURNITURE		24
25		SPARE		20						20		RECEPT – WAITING B112		26
27		SPARE		20						20		DOOR OPERATORS		28
29		SPARE		20						20		DISP. ROOM TV PLUGS		30
31		SNOW MELT CABLE		20						20		DISP. ROOM GEN PLUGS		32
33				20						20		SPARE		34
35		SNOW MELT CABLE		20						20		DISP. ROOM GEN PLUGS		36
37				20						20		SPACE		38
39		SNOW MELT CABLE		20						20		SPACE		40
41				20						20		SNOW MELT CONTROLLER		42
						ØA	ØB	ØC						

PANELBOARD INFORMATION
VOLTAGE: 208Y/120
BUS AMPACITY: 225A
MAIN TYPE: MLO
MINIMUM A.I.C.:
MOUNTING: FLUSH

[ ] FEED-THROUGH LUGS
[ ] DOUBLE LUGS
[X] INTEGRAL SPD

PANELBOARD LOCATION

BRANCH CIRCUIT CONNECTED LOAD		DEMAND FACTOR	CALCULATED LOAD	FEEDER AND OVERCURRENT SIZING	
CONTINUOUS LOAD (C)		100%		125%	
ELECTRIC HEAT (E)		100%		125%	
NON-CONTINUOUS LOAD (NC)		100%		100%	
KITCHEN LOAD (K)		100%		100%	
RECEPTACLE BASE LOAD (R)		100%		100%	
RECEPTACLE DEMAND LOAD (R)		50%		100%	
LIGHTING LOAD (L)		100%		125%	
ADDITIONAL TRACK LIGHTING LOAD				100%	
MOTORS, HIGHEST LOAD (MH)		125%		100%	
MOTORS, REMAINING LOAD (M)		100%		100%	
		TOTAL(KVA):			
		TOTAL (AMPS):		TOTAL (AMPS):	

NOTE: DEMAND AND SIZING INFORMATION IS CALCULATED FROM CONNECTED LOAD

NOTES: provide integral 100ka spd. panel requirements to match existing.

©Copyright 2021 by Peter Basso Associates, Inc

(E) PANELBOARD LP-F

#	LOAD TYPE	DESCRIPTION	CB TYPE	CB	VA	ØA	ØB	ØC	VA	CB	CB TYPE	DESCRIPTION	LOAD TYPE	#
1		LIGHTING B214		20						20		RECEPT – OPEN OFFICE B214		2
3		LIGHTING B209, B212		20						20		RECEPT – OPEN OFFICE B209, B214		4
5		LIGHTING B206, B208		20						20		RECEPT – OPEN OFFICE B209		6
7		LIGHTING B202		20						20		RECEPT – OPEN OFFICE B209		8
9		LIGHTING – MULTIPURPOSE B206		20						20		RECEPT – OPEN OFFICE B209		10
11		RECEPT – MULTIPURPOSE B206		20						20		RECEPT – OPEN OFFICE B209		12
13		RECEPT – MULTIPURPOSE B206		20						20		RECEPT – OPEN OFFICE B209		14
15		RECEPT – MULTIPURPOSE B206		20						20		RECEPT – RECORDS B222		16
17		RECEPT – MULTIPURPOSE – GARBAGE DISP		20						20		RECEPT – OFFICE B223, B225		18
19		RECEPT – MULTIPURPOSE B206		20						20		OPEN OFFICE B214 SYSTEM FURNITURE		20
21		LIGHTING – MULTIPURPOSE		20						20		SPARE		22
23		SPARE		20						20		SPARE		24
25		SPARE		20						20		SPARE		26
27		SPARE		20						20		SPARE		28
29		SPARE		20						20		SPARE		30
31		SPARE		20						20		SPARE		32
33		SPARE		20						20		SPARE		34
35		SPARE		20						20		SPARE		36
37		SPARE		20						20		SPARE		38
39		SPARE		20						20		SPARE		40
41		SPARE		20						20		SPARE		42
						ØA	ØB	ØC						

PANELBOARD INFORMATION
VOLTAGE: 208Y/120
BUS AMPACITY: 225A
MAIN TYPE: MLO
MINIMUM A.I.C.:
MOUNTING: FLUSH

[ ] FEED-THROUGH LUGS
[ ] DOUBLE LUGS
[X] INTEGRAL SPD

PANELBOARD LOCATION

BRANCH CIRCUIT CONNECTED LOAD		DEMAND FACTOR	CALCULATED LOAD	FEEDER AND OVERCURRENT SIZING	
CONTINUOUS LOAD (C)		100%		125%	
ELECTRIC HEAT (E)		100%		125%	
NON-CONTINUOUS LOAD (NC)		100%		100%	
KITCHEN LOAD (K)		100%		100%	
RECEPTACLE BASE LOAD (R)		100%		100%	
RECEPTACLE DEMAND LOAD (R)		50%		100%	
LIGHTING LOAD (L)		100%		125%	
ADDITIONAL TRACK LIGHTING LOAD				100%	
MOTORS, HIGHEST LOAD (MH)		125%		100%	
MOTORS, REMAINING LOAD (M)		100%		100%	
		TOTAL(KVA):			
		TOTAL (AMPS):		TOTAL (AMPS):	

NOTE: DEMAND AND SIZING INFORMATION IS CALCULATED FROM CONNECTED LOAD

NOTES: provide integral 100ka spd. panel requirements to match existing.

©Copyright 2021 by Peter Basso Associates, Inc

REPLACEMENT/NEW PANELBOARD LP-C

#	LOAD TYPE	DESCRIPTION	CB TYPE	CB	VA	ØA	ØB	ØC	VA	CB	CB TYPE	DESCRIPTION	LOAD TYPE	#
1	L	**REV LIGHTS: 253, 254, 257**		20	210	210				20		FLR RECEPT RM 206/ARTS CAROLS PLUGS		22
2		RECEPTS RM 204 COPY		20						20		FLR RECEPT RM 206		23
3		RECEPTS LAB PLUGMOLD		20				340	340	20		**REV LIGHTS: 225, 226, 230, 237, 244**	L	24
4	L	**REV LIGHTS: PASSAGE 256, OFF 258**		20	315	391			76	20		**REV LIGHTS: MECH RM 249**	L	25
5	L	**REV LIGHTS: 229, 229A, 250**		20	213		213			20		TEMP CONTROL PANELS		26
6		RECEPTS FRONT DESK		20				360	360	20		WALL HTR CHIEFS RESTRM,NEW RECPTS	R	27
7		LTS RMS 211, 212, 214, 215		20		360			360	20		RECEPT RM 226 & NEW RECEPTS	R	28
8		RECEPTS, RMS 211, 212, 214, 215		20						20		**REV LIGHTS: RMS 240, 241, 242**	L	29
9		RECEPTS RM 203		20						20		COMPUTER RM I.G. PLUGS		30
10		LTS RM 206		20						20		SUB PANEL IT ROOM		31
11	L	**REV LIGHTS: RM 248**		20	60		60							32
12		DOOR PUSHBUTTONS RM 214		20						20		EXH FANS		33
13	L	**REV LIGHTS: TOILET RMS 232, 234, JAN 233**		20	209	209				20		CORRIDOR & STAIR LIGHTS		34
14		RECEPTS RESTROOMS		20						20		LOBBY LTS, HALLWAY LTS		35
15		LPC – SUBPANEL		50						20		STAIRS & PUBLIC REST ROOM		36
16										20		COPY MACHINGE		37
17	R	**NEW RECEPTS TLT 201 & OFF 202**		20	900		900			50		220V STOVE		38
18	M	**NEW EF- 10 (ROOF)**	NEW	15	384			384						39
19	M	**NEW EF-1 (ROOF)**	NEW	15	768	1008			240	15	STB	**NEW CONDENSATE PUMPS**	M	40
20	NC	**NEW FLUSH VALVES - MENS**		20	1200		1200			20		AC PLUG		41
21	NC	**NEW FLUSH VALVES - WMNS & TLT**		20	800			800		20		COMPUTER RM PLUG		42
43	NC	**NEW HVAC-2 RECEPTACLE & LIGHTING**		20	280	808			528	15		**NEW EF-120**	M	44
45		SPARE		20						20		SPARE		46
47		SPARE		20						20		SPARE		48
49		SPARE		20						20		SPARE		50
51		SPARE		20						20		SPARE		52
53		SPARE		20						20		SPARE		54
55		SPARE		20						20		SPARE		56
57		SPARE		20						20		SPARE		58
59		SPARE		20						20		SPARE		60
61		SPARE		20						20		SPARE		62
63		SPARE		20						20		SPARE		64
						2986	2373	1884						
						ØA	ØB	ØC						

PANELBOARD INFORMATION
VOLTAGE: 208Y/120
BUS AMPACITY: 225A
MAIN TYPE: MLO
MINIMUM A.I.C.: 10,000
MOUNTING: SURFACE

[ ] FEED-THROUGH LUGS
[ ] DOUBLE LUGS
[ ] INTEGRAL SPD

PANELBOARD LOCATION

BRANCH CIRCUIT CONNECTED LOAD		DEMAND FACTOR	CALCULATED LOAD	FEEDER AND OVERCURRENT SIZING	
CONTINUOUS LOAD (C)		100%		125%	
ELECTRIC HEAT (E)		100%		125%	
NON-CONTINUOUS LOAD (NC)	2280	100%	2280	100%	2280
KITCHEN LOAD (K)		100%		100%	
RECEPTACLE BASE LOAD (R)	1620	100%	1620	100%	1620
RECEPTACLE DEMAND LOAD (R)		50%		100%	
LIGHTING LOAD (L)	1423	100%	1423	125%	1779
ADDITIONAL TRACK LIGHTING LOAD				100%	
MOTORS, HIGHEST LOAD (MH)		125%		100%	
MOTORS, REMAINING LOAD (M)	1920	100%	1920	100%	1920
		TOTAL(KVA):	7.24		
		TOTAL (AMPS):	20	TOTAL (AMPS):	21

NOTE: DEMAND AND SIZING INFORMATION IS CALCULATED FROM CONNECTED LOAD

NOTES:

©Copyright 2021 by Peter Basso Associates, Inc

REPLACEMENT/NEW PANELBOARD LP-E

#	LOAD TYPE	DESCRIPTION	CB TYPE	CB	VA	ØA	ØB	ØC	VA	CB	CB TYPE	DESCRIPTION	LOAD TYPE	#
1	L	**REV LIGHTS 121, 122, 123, 127**		20	286	286				20		RECEPT – LOCKER B126, B124, VEST, BRKRM		2
3	L	**REV LIGHTS 110, 111**		20	210		210			20		RECPT – BREAKRM B123 GARBAGE DISPOSER		4
5	L	**REV LIGHTS 113, 114, 116**		20	525			525		20		RECEPT – BREAKROOM B123		6
7	L	**REV LIGHTS 108, 109, 112, 119**		20	280	280				20		RECEPT – BREAKEROOM B123 REFRIG		8
9	L	**REV LIGHTS 101, 102, 103, 104, 105**		20	430		430			20		RECEPT – BRKRM B123,SEC B121,CAPT B120		10
11		RECEPT – LOBBY, LIGHTING FOYER		20						20		RECEPT – CAPT B120		12
13		**NEW SPARE**		20						20		RECEPT – STORAGE B119, RECORDS B114		14
15		LOBBY ADA DOORS		20						20		**NEW SPARE**		16
17	C	**NEW S DAMPER/D DETECTS - DISPATCH**		20	360			540	180	20		**NEW RECEPT - DISPATCH COUNTER**	R	18
19		SPARE		20		800			800	20		**NEW RECEPT - REFRIG - DISPATCH**	R	20
21		SPARE		20			1200		1200	20		**NEW RECEPT - DISPOSER - DISPATCH**	R	22
23		SPARE		20				1200	1200	20		**NEW RECEPT - COFMKR - DISPATCH**	R	24
25		SPARE		20						20		RECEPT – WAITING B112		26
27		SPARE		20						20		DOOR OPERATORS		28
29		SPARE		20						20		DISP. ROOM TV PLUGS		30
31		SNOW MELT CABLE		20						20		DISP. ROOM GEN PLUGS		32
33				20						20		SPARE		34
35		SNOW MELT CABLE		20						20		DISP. ROOM GEN PLUGS		36
37				20						20		SPACE		38
39		SNOW MELT CABLE		20						20		SPACE		40
41				20						20		SNOW MELT CONTROLLER		42
43	R	**NEW RECPTS FURN. - RECORDS 114**		20	360	900			540	20		**NEW RECPTS - RECEPTN DESK AREA**	R	44
45	R	**NEW RECPTS FURN. - RECORDS 114**		20	360		900		540	20		**NEW RECPTS - RECEPTN DESK AREA**	R	46
47	R	**NEW RECPTS FURN. - RECORDS 114**		20	360			1560	1200	20		**NEW SHREDDER RECEPT - RM 114**	M	48
49	M	**NEW CONDEN PUMPS - DISPATCH**		15	240	2040			1800	20		**NEW COPIER RECECPT - RECORDS 114**	M	50
51	NC	**NEW RECEPTACLE - ATM**		20	250		250			20		NEW SPARE		52
53		NEW SPARE		20				720	720	20		**NEW RECEPTS - RECORDS , OFF 116**	R	54
55		NEW SPARE		20		864			864	25		**NEW H-3**	MH	56
57		NEW SPARE		20			864		864				MH	58
59		NEW SPARE		20						20		NEW SPARE		60
61		NEW SPARE		20						20		NEW SPARE		62
63		NEW SPARE		20						20		NEW SPARE		64
65		NEW SPARE		20						20		NEW SPARE		66
67		NEW SPARE		20						20		NEW SPARE		68
69		NEW SPARE		20						20		NEW SPARE		70
71		NEW SPARE		20						20		NEW SPARE		72
73		NEW SPARE		20						20		NEW SPARE		74
75		NEW SPARE		20						20		NEW SPARE		76
77		NEW SPARE		20						20		NEW SPARE		78
79		NEW SPARE		20						20		NEW SPARE		80
81		NEW SPARE		20						20		NEW SPARE		82
83		NEW SPARE		20						20		NEW SPARE		84
						5170	3854	4545						
						ØA	ØB	ØC						

PANELBOARD INFORMATION
VOLTAGE: 208Y/120
BUS AMPACITY: 225A
MAIN TYPE: MLO
MINIMUM A.I.C.: 10,000
MOUNTING: FLUSH

[ ] FEED-THROUGH LUGS
[ ] DOUBLE LUGS
[X] INTEGRAL SPD

PANELBOARD LOCATION

BRANCH CIRCUIT CONNECTED LOAD		DEMAND FACTOR	CALCULATED LOAD	FEEDER AND OVERCURRENT SIZING	
CONTINUOUS LOAD (C)	360	100%	360	125%	450
ELECTRIC HEAT (E)		100%		125%	
NON-CONTINUOUS LOAD (NC)	250	100%	250	100%	250
KITCHEN LOAD (K)		100%		100%	
RECEPTACLE BASE LOAD (R)	6260	100%	6260	100%	6260
RECEPTACLE DEMAND LOAD (R)		50%		100%	
LIGHTING LOAD (L)	1731	100%	1731	125%	2164
ADDITIONAL TRACK LIGHTING LOAD				100%	
MOTORS, HIGHEST LOAD (MH)	1728	125%	2160	100%	2160
MOTORS, REMAINING LOAD (M)	3240	100%	3240	100%	3240
		TOTAL(KVA):	14.00		
		TOTAL (AMPS):	39	TOTAL (AMPS):	40

NOTE: DEMAND AND SIZING INFORMATION IS CALCULATED FROM CONNECTED LOAD

NOTES: provide integral 100ka spd. panel requirements to match existing.

©Copyright 2021 by Peter Basso Associates, Inc

REPLACEMENT/NEW PANELBOARD LP-F

#	LOAD TYPE	DESCRIPTION	CB TYPE	CB	VA	ØA	ØB	ØC	VA	CB	CB TYPE	DESCRIPTION	LOAD TYPE	#
1	L	**REV LIGHTS: 217, 218, 219, 223, 224**		20	464	464				20		RECEPT – OPEN OFFICE B214		2
3	L	**REV LIGHTS: 214, 215, 216**		20	372		372			20		RECEPT – OPEN OFFICE B209, B214		4
5	L	**REV LIGHTS: CORRIDORS 210, 245**		20	195			195		20		RECEPT – OPEN OFFICE B209		6
7	L	**REV LIGHTS: 206, 207, 208**		20	156	156				20		RECEPT – OPEN OFFICE B209		8
9	L	**REV LIGHTS: UNDERCAB IN 209, 213**		20	190		190			20		RECEPT – OPEN OFFICE B209		10
11		RECEPT – MULTIPURPOSE B206		20						20		RECEPT – OPEN OFFICE B209		12
13		RECEPT – MULTIPURPOSE B206		20						20		RECEPT – OPEN OFFICE B209		14
15		RECEPT – MULTIPURPOSE B206		20						20		RECEPT – RECORDS B222		16
17		RECEPT – MULTIPURPOSE – GARBAGE DISP		20						20		RECEPT – OFFICE B223, B225		18
19		RECEPT – MULTIPURPOSE B206		20						20		OPEN OFFICE B214 SYSTEM FURNITURE		20
21	L	**REV LIGHTS: 209**		20	500		1760		1260	20		**NEW RECEPT - OPEN OFFICE 223**	R	22
23		**NEW OFFICE RECEPTS**		20				180	180	20		**NEW RECEPT - OFFICES 217,218**	R	24
25		**NEW OFFICE RECEPTS**		20		800			800	20	GFCI	**NEW REFRIG RECEPT - BRK RM 225**	K	26
27	MH	**NEW ACU/ACCU-102**		35	2080		3280		1200	20		**NEW DISPOSER RECEPT - BRK RM 225**	K	28
29	MH				2080			3880	1800	20		**NEW COFFMKR RECEPT - BRK RM 225**	K	30
31	M	**NEW ACU/ACCU-103**		35	2080	2280			200	20		SPARE	K	32
33	M				2080		3120		1040	20		**NEW RECEPTS BRK RM 225**	R	34
35	M	**NEW ACU/ACCU-201**		30	1664			2864	1200	20		**NEW SHREDDER RECEPT - WK RM 226**	R	36
37	M				1664	3464			1800	20		**NEW COPIER RECEPT - WK RM 226**	R	38
39	M	**NEW ACU/ACCU-202**		35	2080		2440		360	20		**NEW RECEPTS - WK RM 226**	R	40
41	M				2080			2280	200	20		**NEW SMOKE DAMPER**	NC	42
43	K	**NEW UPRIGHT FRZR BRK RM 225**	GFCI	20	1200	1728			528	20		**NEW CP-10**	M	44
45	L	**NEW LIGHTS: OFFICES 222, 236**		20	250		3162		2912	40		**NEW RANGE RECEPT - BRK RM 225**	K	46
47	L	**NEW LIGHTS: OFFICES 238, 239**		20	250			3162	2912				K	48
49	M	**NEW CENTRAL VACUUM**		20	1150	1150				20		SPARE		50
51		SPARE		20						20		SPARE		52
53		SPARE		20						20		SPARE		54
55		SPARE		20						20		SPARE		56
57		SPARE		20						20		SPARE		58
59		SPARE		20						20		SPARE		60
61		SPARE		20						20		SPARE		62
63		SPARE		20						20		SPARE		64
						10042	14324	12561						
						ØA	ØB	ØC						

PANELBOARD INFORMATION
VOLTAGE: 208Y/120
BUS AMPACITY: 225A
MAIN TYPE: MLO
MINIMUM A.I.C.: 10,000
MOUNTING: FLUSH

[ ] FEED-THROUGH LUGS
[ ] DOUBLE LUGS
[X] INTEGRAL SPD

PANELBOARD LOCATION

BRANCH CIRCUIT CONNECTED LOAD		DEMAND FACTOR	CALCULATED LOAD	FEEDER AND OVERCURRENT SIZING	
CONTINUOUS LOAD (C)		100%		125%	
ELECTRIC HEAT (E)		100%		125%	
NON-CONTINUOUS LOAD (NC)	200	100%	200	100%	200
KITCHEN LOAD (K)	11024	65%	7166	100%	7166
RECEPTACLE BASE LOAD (R)	5840	100%	5840	100%	5840
RECEPTACLE DEMAND LOAD (R)		50%		100%	
LIGHTING LOAD (L)	2377	100%	2377	125%	2971
ADDITIONAL TRACK LIGHTING LOAD				100%	
MOTORS, HIGHEST LOAD (MH)	4160	125%	5200	100%	5200
MOTORS, REMAINING LOAD (M)	13326	100%	13326	100%	13326
		TOTAL(KVA):	34.11		
		TOTAL (AMPS):	95	TOTAL (AMPS):	96

NOTE: DEMAND AND SIZING INFORMATION IS CALCULATED FROM CONNECTED LOAD

NOTES: provide integral 100ka spd. panel requirements to match existing.

©Copyright 2021 by Peter Basso Associates, Inc

PANEL SCHEDULE INDEX

(E) LP-C	(E) LP-E	(E) LP-F
(REV) LP-C	(REV) LP-E	(REV) LP-F

PARTNERS

PARTNERS in Architecture, PLC
65 MARKET STREET
MOUNT CLEMENS, MI 48043
P 586.469.3600

Statement of Intellectual Property
The ideas, concepts, drawings and thoughts conveyed herein are the intellectual property of PARTNERS in Architecture, PLC, 65 Market Street, Mount Clemens, MI, 48043 (P 586.469.3600). This set of drawings, in whole or in part, may not be reproduced, without the written consent of PARTNERS in Architecture, PLC. This information is protected under U.S. Copyright Law, all rights reserved.

© Copyright 2022

CONSULTANT
Peter Basso Associates Inc
CONSULTING ENGINEERS
5145 Livernois, Suite 100
Troy, Michigan 48098-3276
Tel: 248-879-5666
Fax: 248-879-0007
www.PeterBassoAssociates.com
PBA Project No. 2021.0163

KEY PLAN

OWNER
Canton Township Public Safety

PROJECT NAME
Public Safety Building Interior Renovations

1150 S. Canton Center Road
Canton, MI 48188

PROJECT NO.
21-130

ISSUES / REVISIONS

SD Issue	9/20/2021
Design Development	10/29/2021
Pricing Set	01/19/2022
95% Review	02/02/2022
QAQC	02/18/2022
Bidding / Construction	03/09/2022
Addendum 01	03/18/2022

DRAWN BY
SAM
CHECKED BY
EMG
APPROVED BY
EMG
SHEET NAME
PANEL SCHEDULES

SHEET NO.
E6.2